ALL TERRAIN CRANE
ATF-140N-5.1

構 成 図

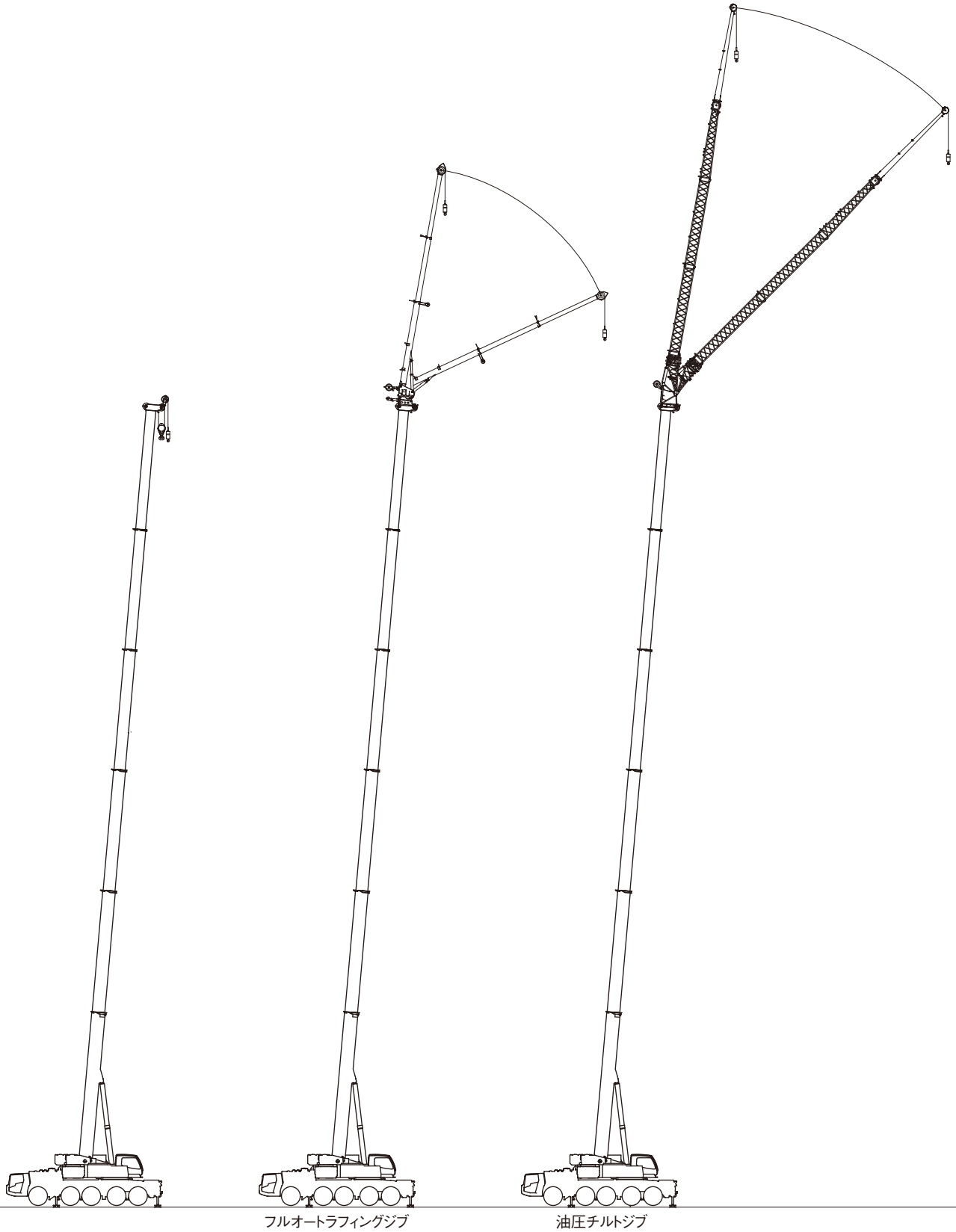

ブーム

フルオートラフィングジブ
FLJ

油圧チルトジブ
HLJ

INDEX

■ 諸　元　・クレーン、キャリヤ・・P　2
■ 走　行　・公道走行状態・構内移動姿勢・・・・・・・・・・・・・・・・・・・・・・・・・・・・・・・・・・・・・P　3
　　　　　・最小直角通路幅・・P　4
■ 搬　送　・分解搬送部品・・P　5
■ 設　置　・アウトリガ張出幅・テールスイング・・・・・・・・・・・・・・・・・・・・・・・・・・・・・・・P　6
　　　　　・フック寸法（ブーム、FLJ、HLJ）、カウンタウエイト組合せ・質量・・・・・・・・・・・・P　7
■ 作業領域　・作業領域図・・P　8
■ 定格総荷重表　・ブーム・・P　11
　　　　　・フルオートラフィングジブ(FLJ)・・・・・・・・・・・・・・・・・・・・・・・・・・・・・・・・・・・P　58
　　　　　・油圧チルトジブ(HLJ)・・・P 118

カウンタウエイトとアウトリガ張出幅の組合せによって次のように定格総荷重表を選定し該当ページを読み取ってください。

ブーム	アウトリガ張出幅 \ カウンタウエイト	40.9 t	28.9 t	25.4 t	15.4 t	7.1 t	0 t
	7.5 m	P16	P20	P26	P32	P40	P48
	6.2 m	P18	P22	P28	P34	P42	P50
	5.0 m	—	P24	P30	P36	P44	P52
	4.1 m	—	—	—	P38	P46	P54
	2.5 m	—	—	—	—	—	P56

ブーム＋フルオートラフィングジブ(FLJ)	アウトリガ張出幅 \ カウンタウエイト	40.9 t	28.9 t	25.4 t	15.4 t	7.1 t
	7.5 m	P64	P73	P86	P100	P113
	6.2 m	P68	P77	P91	P104	—
	5.0 m	—	P82	P95	P109	—

ブーム＋油圧チルトジブ(HLJ)	アウトリガ張出幅 \ カウンタウエイト	40.9 t	28.9 t	25.4 t	15.4 t	7.1 t	0 t
	7.5 m	P124	P134	P149	P164	P184	P199
	6.2 m	P129	P139	P154	P169	P189	P204
	5.0 m	—	P144	P159	P174	P194	—
	4.1 m	—	—	—	P179	—	—

注）－印の組合せでは、クレーン作業を行わないでください。

ATF-140N-5.1のジブは、フルオートラフィングジブ(FLJ)、油圧チルトジブ(HLJ)の2種類があります。

スペック	フルオートラフィングジブ (FLJ)	油圧チルトジブ (HLJ)
ATF-140N-1-90101	●	●
ATF-140N-1-90102	●	—
ATF-140N-1-90103	—	●

諸　元

■クレーン

ブーム	12.8m	140,000 kg × 2.5m（2×10本掛、アタッチメント付）
	17.1m	90,000 kg × 3.5m（11本掛）
	21.4m	90,000 kg × 3.5m（11本掛）
	22.3m	84,300 kg × 3.0m（11本掛）
	25.8m	70,000 kg × 5.0m（ 9 本掛）
	30.1m	54,300 kg × 4.5m（ 7 本掛）
	31.7m	30,000 kg × 5.0m（ 4 本掛）
	34.4m	44,000 kg × 5.0m（ 6 本掛）
	38.7m	32,800 kg × 8.0m（ 4 本掛）
	43.0m	27,100 kg × 9.0m（ 4 本掛）
	47.4m	21,400 kg × 11.0m（ 3 本掛）
	51.7m	16,600 kg × 14.0m（ 2 本掛）
	56.0m	13,200 kg × 16.0m（ 2 本掛）
	60.0m	10,600 kg × 18.0m（ 2 本掛）
シングルトップ		8,700 kg （ 1 本掛）
フルオートラフィングジブ(FLJ)	1.6m+ 7.4m FLJ	7,300 kg × 30.0m（ 1 本掛）
	1.6m+12.4m FLJ	4,300 kg × 30.0m（ 1 本掛）
	1.6m+17.4m FLJ	3,300 kg × 20.0m（ 1 本掛）
油圧チルトジブ(HLJ)	1.0m+ 2.8m HLJ	38,100 kg × 3.5m（ 5 本掛）
	1.0m+ 9.2m HLJ	15,000 kg × 12.0m（ 2 本掛）
	1.0m+17.0m HLJ	7,300 kg × 6.0m（ 1 本掛）
	1.0m+24.0m HLJ	5,100 kg × 12.0m（ 1 本掛）
	1.0m+31.0m HLJ	3,500 kg × 16.0m（ 1 本掛）
最大地上揚程	ブーム	60.0m（10.6 t）
	FLJ	78.0m（ 2.8 t）
	HLJ	88.0m（ 1.6 t）
最大作業半径	ブーム	56.0m（ 2.2 t）
	FLJ	64.0m（ 1.3 t）
	HLJ	72.0m（ 1.0 t）
ブーム・ジブ長さ	ブーム	12.8m ～ 60.0m
	FLJ	1.6m ＋ 7.4m ～ 17.4m
	HLJ	1.0m ＋ 2.8m ～ 31.0m
ブーム・ジブ形式	ブーム	箱型6段油圧伸縮式 各段ピンロック方式
	FLJ	箱型3段同時伸縮式 オフセット 5°～ 60° 油圧無段階傾斜式
	HLJ	ラチス型 4段＋箱型1段 オフセット 5°～ 40° 油圧無段階傾斜式
	シングルトップ	先端ブーム取付横折曲格納式
ブーム・ジブ伸縮装置	ブーム	複動油圧シリンダ直押式1本
	FLJ	複動油圧シリンダ直押式1本 ワイヤロープ式伸縮装置1基
ブーム伸長速度		47.2m／500 s
フック		100 t フック（6枚シーブ） 60 t フック（3枚シーブ） 26 t フック（1枚シーブ） 8.7 t フック
巻上装置		油圧モータ駆動遊星歯車減速式 自動ブレーキ シングルウインチ 2基
ワイヤロープ	主巻	径21mm × 長さ320m
	補巻	径21mm × 長さ250m
巻上速度	主巻	125m／min（4層）
	補巻	125m／min（4層）
ブーム起伏装置		複動油圧シリンダ直押式 1本
ブーム上げ速度		−1.0°～ 85.0°／45 s
旋回装置		油圧モータ駆動遊星歯車減速式 ボール式スイングベアリング 油圧操作式旋回ロック 手動スイッチ式ブレーキ
旋回角度		360° 連続
旋回速度		1.6 min^{-1}
カウンタウエイト		40.9 t、28.9 t、25.4 t、15.4 t、7.1 t、0 t
アウトリガ		全油圧式 H型 張出幅：最大7.5m、 中間6.2m、 5.0m、 4.1m、 最小2.5m スライド・ジャッキ各個操作装置付 スライドロック用ピン付 スライド格納式フロート

上部エンジン	形式	ベンツ OM934LA 水冷4サイクル 直列4気筒 直接噴射式 排気ターボ過給 インタークーラ付 ディーゼルエンジン 尿素SCRシステム付
	総排気量	5.13 L
	最高出力	129kW {175PS} / 2,200min^{-1}{rpm}
	最大トルク	750N・m {76kgf・m} / 1,200～1,600min^{-1}{rpm}
燃料タンク容量		220L
AdBlueタンク容量		19L
油圧ポンプ		高圧可変ピストンポンプ 2個 高圧ピストンポンプ 1個 高圧ギヤポンプ 1個
安全装置		過負荷防止装置（AML） 作業範囲制限機能 旋回範囲制限機能 旋回自動停止機能 ブーム起伏緩停止機能 フック移動量表示機能 カウンタウエイト組み合わせ検出装置 個別検出式アウトリガ張出幅自動検出装置 巻過防止装置 捨巻確保装置 水準器 玉掛けロープはずれ止め 旋回ロック装置 油圧安全弁 油圧ロック装置（伸縮･起伏･巻上･ジャッキ）
付属装置		ブーム着脱装置 カウンタウエイト着脱装置 速度調整装置(起伏・旋回・ウインチ・ジブチルト) 作業灯、内部チルト式クレーン運転室、シートヒーター リフトアジャスタ、リリースアジャスタ AML外部表示灯、風速計、オイルクーラー エアコン、ラジオ、ドラム視認モニタ 旋回音声警報装置、拡声器 作業準備用ラジコン 携帯通信装置（HELLO-NET Owner's Site）
オプション		敷鉄板、1.5 t ウエイト

■キャリヤ

最高速度		85km/h
登坂能力		tan θ = 0.7
最小回転半径		9.4m
全長		12,870mm
全幅		2,790mm
全高		3,980mm
軸距		2,560mm+1,650mm+2,000mm+1,700mm
輪距		2,350mm
車両総重量（公道走行状態）	全重量	37,250kg
	前軸	17,920kg（1軸 + 2軸）
	後軸	1,370kg（3軸） 17,960kg（4軸 + 5軸）
乗員定員		2名
エンジン	形式	ベンツ OM471LA、 水冷4サイクル直列6気筒直接噴射式、 インタークーラ付ターボ ディーゼルエンジン、 尿素SCRシステム付
	総排気量	12.8L
	最高出力	390kW {530PS} / 1,700min^{-1}{rpm}
	最大トルク	2,460N・m {251kgf・m} / 1,300min^{-1}{rpm}
燃料タンク容量		600L
AdBlueタンク容量		40L
変速機	形式	ZF ASトロニック、自動変速式、インターダブレーキ付
	段	前進12段、後進2段
駆動方式		10×6 (8) 1軸 + (2軸) + 4軸 + 5軸、デフロック装置付
車軸形式		5軸全浮動式
懸架方式		全軸ハイドロニューマチック、レベリング調整付、 サスペンションストローク：+155mm、−120mm
ステアリング		左ハンドル、非常ステアリングポンプ付2系統式、 パワーステアリング、特殊ステアリングモード付
ブレーキ	主ブレーキ	空気式全輪ディスクブレーキ、2系統式、ABS装着
	駐車ブレーキ	2・4・5軸（6輪）制動スプリング式
	補助ブレーキ	変速機内蔵インターダ、排気ブレーキ
タイヤ		385/95 R25 170F ROAD (全輪)
バッテリ		12V -140Ah ×2個 (24V)
付属装置		エアコン、ラジオ、集中給油装置、 仮眠用ベッド、バックモニタ、イモビライザ、 シートヒーター、クルーズコントロール

走　行

■ 公道走行状態

単位(mm)

● キャリヤ ＋ 旋回体+起伏シリンダ　　37.25 t

（公道走行時の注意事項）

1. ブームおよびカウンタウエイト装置を別送し、旋回体を後方向に向け、旋回ブレーキをかけピンロックした状態で走行しなければなりません。
2. 道路運送車両の保安基準による保安基準緩和の認定が必要です。
3. 道路法による特殊車両の通行許可が必要です。基本通行条件 重量: Cが記載された適合証明書を取得していますが、実際の通行経路で申請して許可された条件にしたがって走行しなければなりません。

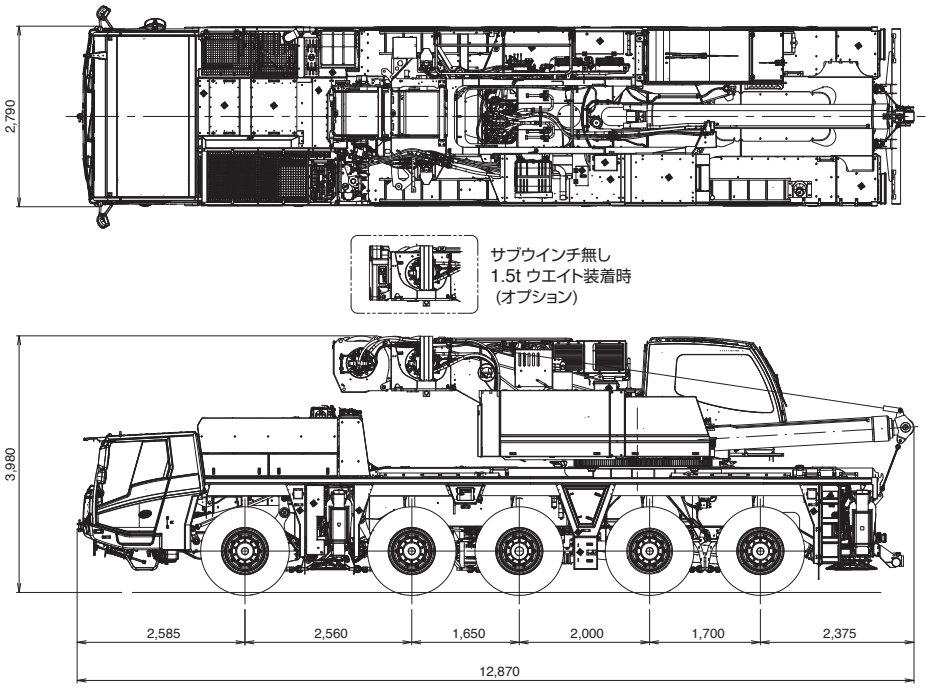

■ 構内移動姿勢

単位(mm)

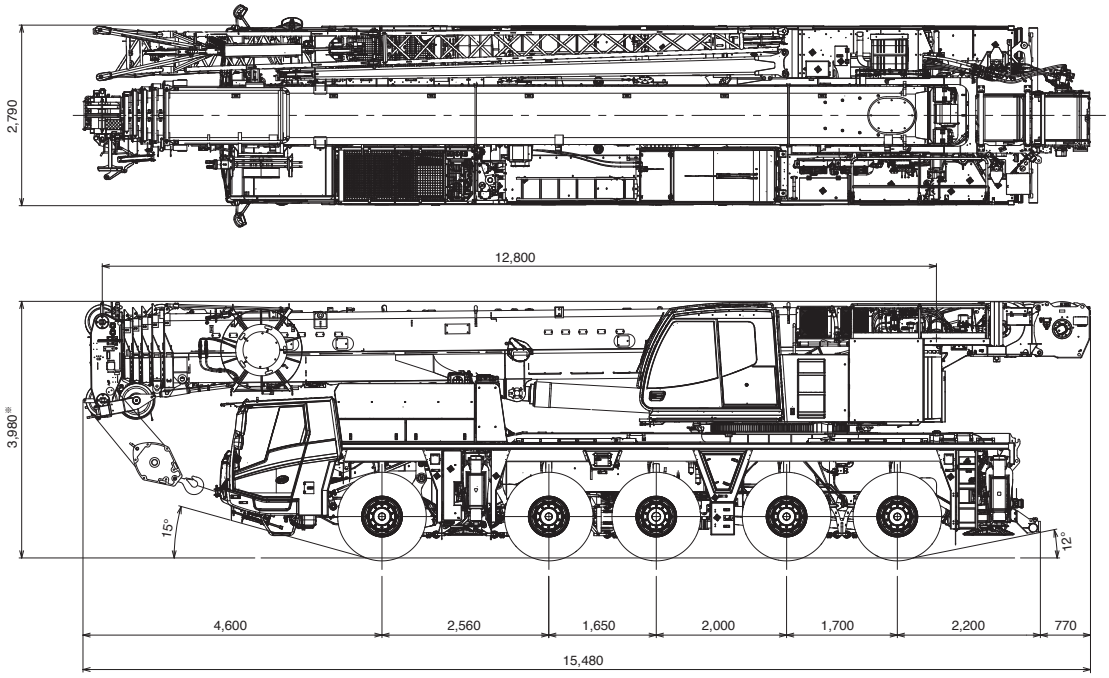

※+155mm、-120mm（サスペンション）

最低地上高：300mm

走　行

■ 最小直角通路幅

単位(mm)

● 公道走行状態

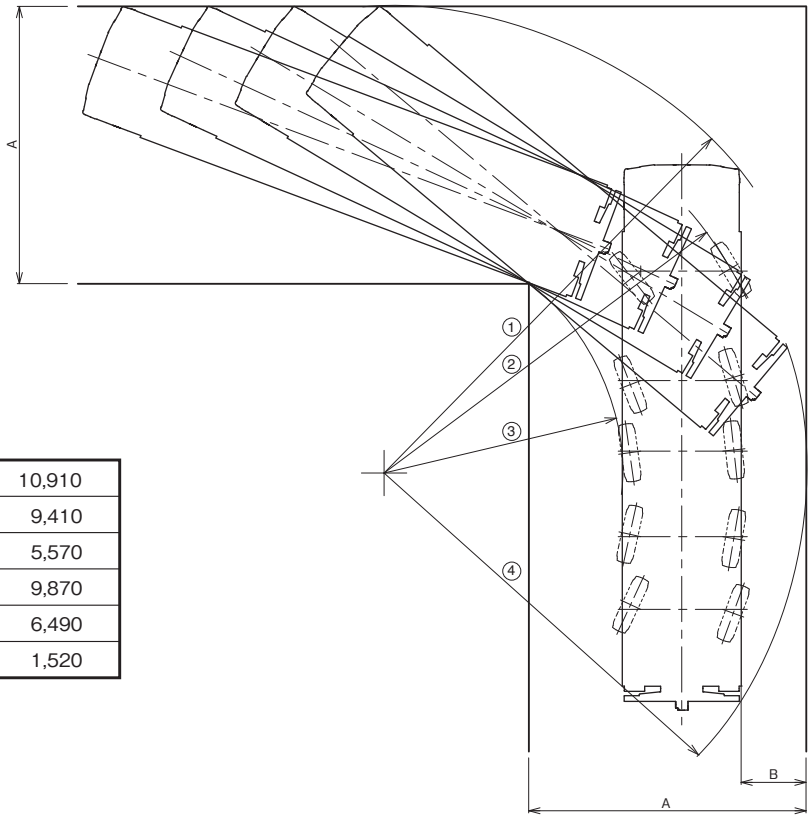

①	10,910
②	9,410
③	5,570
④	9,870
A	6,490
B	1,520

● 構内移動姿勢

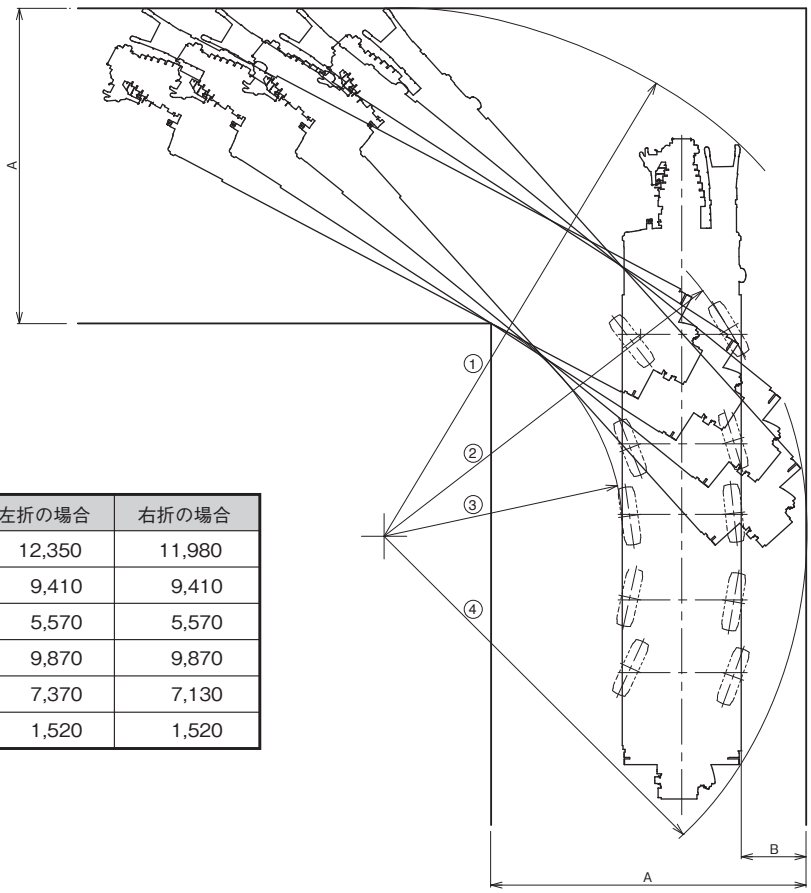

	左折の場合	右折の場合
①	12,350	11,980
②	9,410	9,410
③	5,570	5,570
④	9,870	9,870
A	7,370	7,130
B	1,520	1,520

搬　送

■ 分解搬送部品

単位(mm)

● ブーム（15.2 t ）＋ 油圧チルトジブ（HLJ 1.9 t）　17.1 t

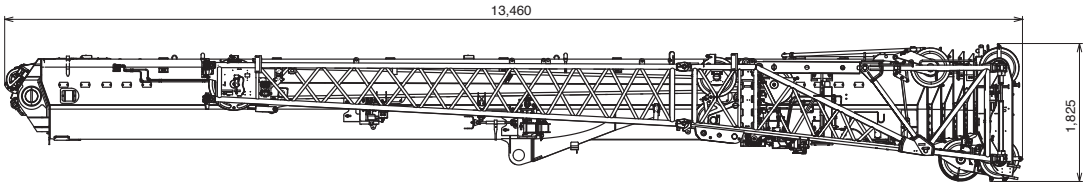

幅 2,370

● ミドルBジブ　0.48 t × 2個

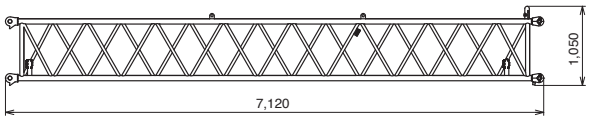

幅 665

● フルオートラフィングジブ（FLJ）　2.3 t

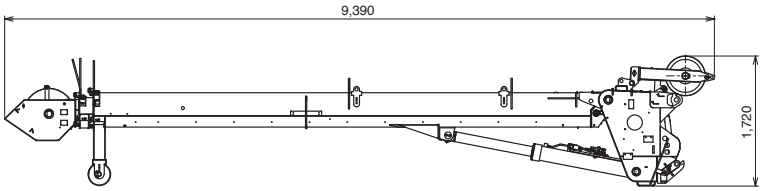

幅 1,090

● アダプタ 0.3 t

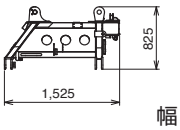

幅 1,670

● カウンタウエイト（C/W）

① 3.1 t

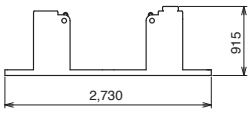

長さ 1,780

② 4.0 t

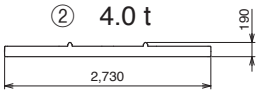

長さ 1,835

③ 8.3 t

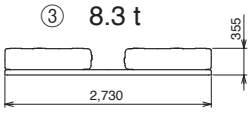

長さ 1,840

④ 10.0 t

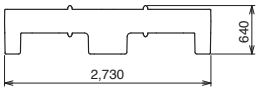

長さ 1,835

⑤ 3.5 t

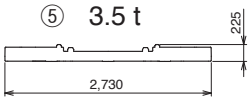

長さ 1,830

⑥ 6.0 t

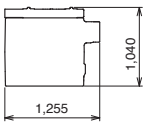

⑦ 6.0 t

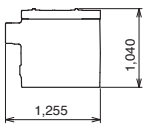

長さ 1,275

● フック

100tフック　1.12 t × 2個

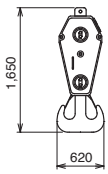

幅 700

60tフック　0.6 t

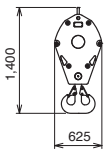

幅 355

26tフック　0.45 t

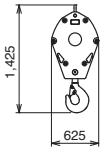

幅 235

8.7tフック　0.3 t

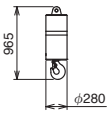

幅 280

● アタッチメントシーブ　0.11 t

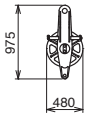

幅 325

● サブウインチ　1.5 t

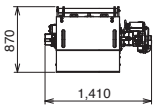

長さ 875

● 1.5t ウエイト（オプション）　1.5 t

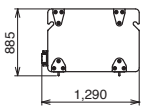

幅 310

その他に付属品があります。

設　置

■ アウトリガ張出幅・テールスイング

単位(mm)

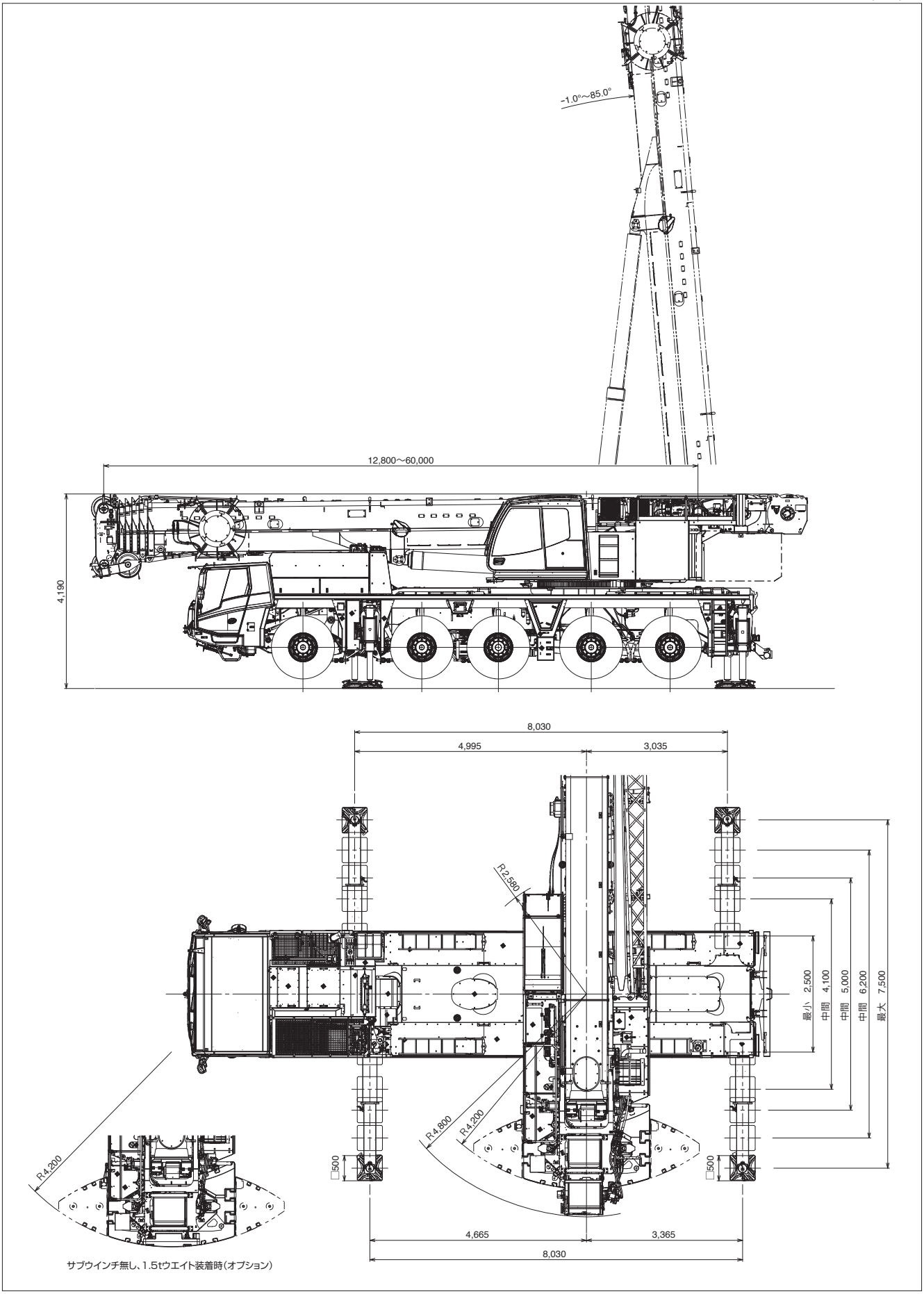

設　置

■ フック寸法

単位(mm)

H：ヘッドシーブ中心とハッカ上面の距離

	100tフック	60tフック	26tフック	8.7tフック
ブーム	2.7m	2.5m	2.5m	
シングルトップ				2.5m
1.0m+2.8m HLJ		2.6m	2.6m	
1.0m+9.2m HLJ			3.1m	3.1m
上記以外 HLJ				4.2m
FLJ				3.4m

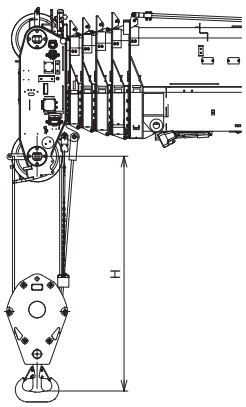

■ カウンタウエイト(C/W)組合せ

● 各ウエイトの使用個数を示す

合計重量	ウエイト ① 3.1t	ウエイト ② 4.0t	ウエイト ③ 8.3t	ウエイト ④ 10.0t	ウエイト ⑤ 3.5t	ウエイト ⑥ 6.0t	ウエイト ⑦ 6.0t
40.9 t	1	1	1	1	1	1	1
28.9 t	1	1	1	1	1		
25.4 t	1	1	1	1			
15.4 t	1	1	1				
7.1 t	1	1					

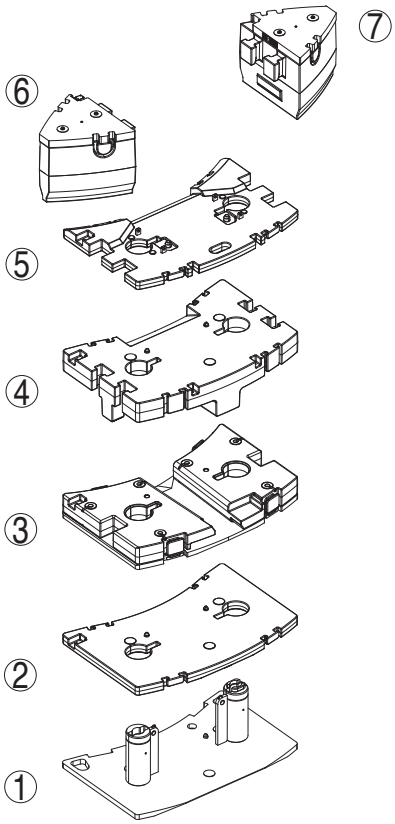

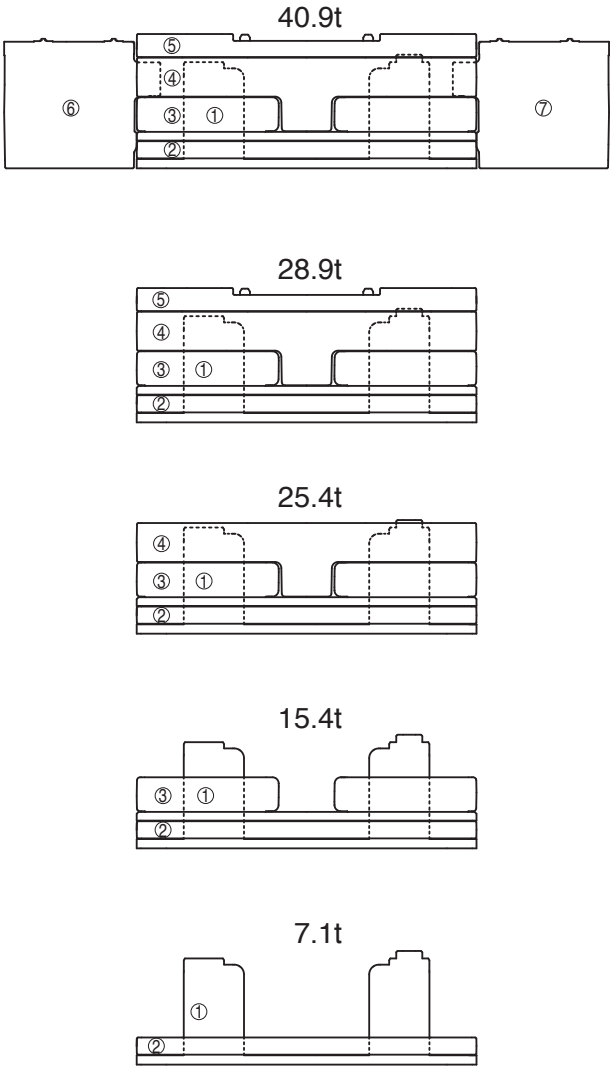

作業領域

■ 作業領域図

No.001 (左側) (右側)

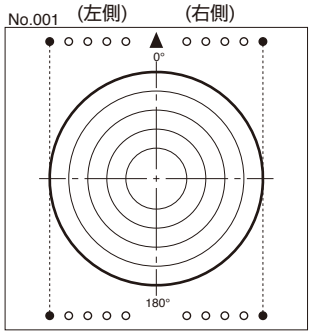

No.002

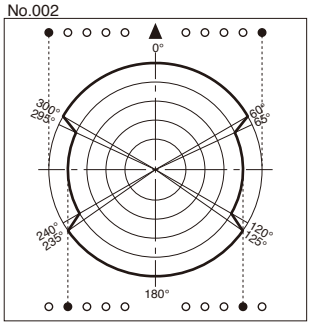

No.003

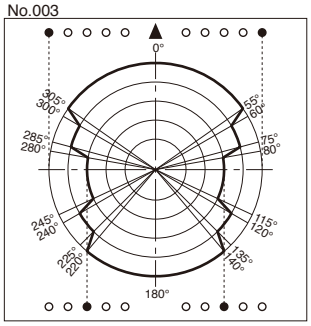

No.004

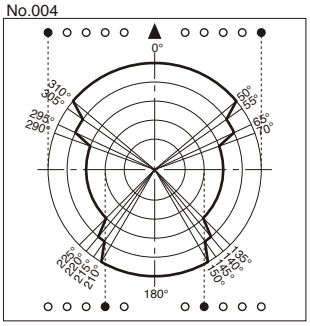

No.005

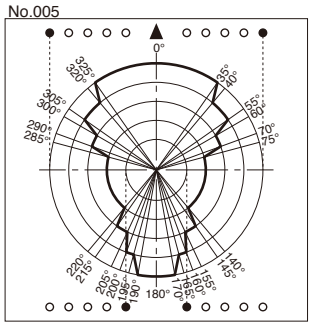

No.006

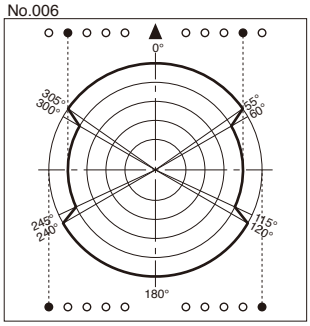

No.007

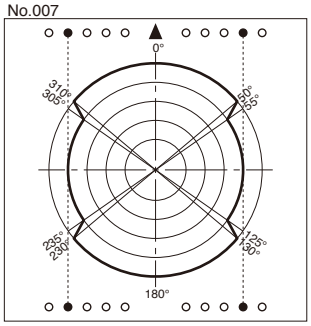

No.008

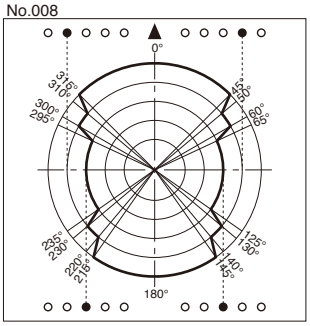

No.009

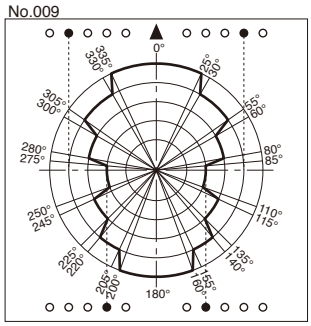

No.010

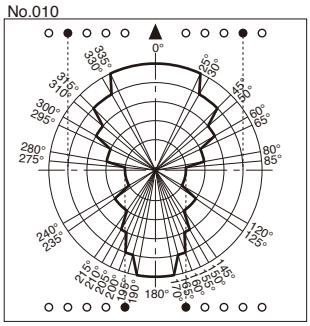

No.011

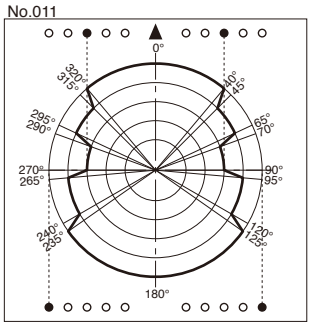

No.012

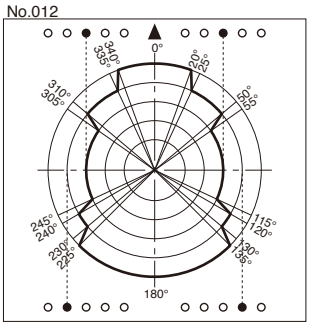

No.013

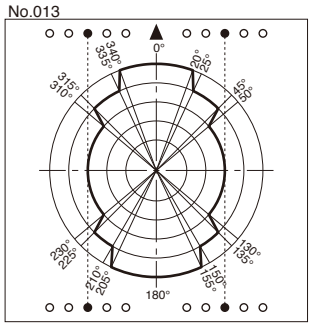

No.014

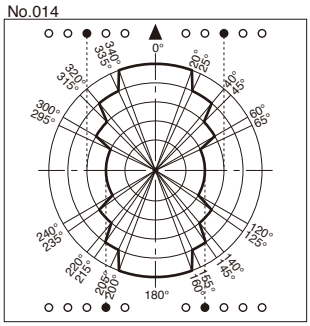

No.015

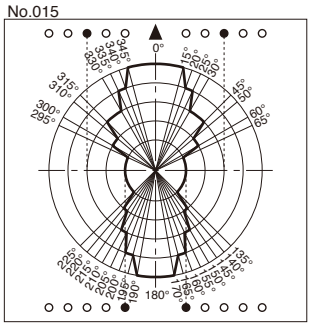

No.016

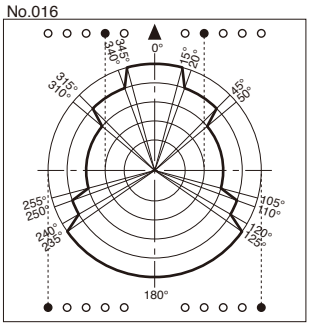

No.017

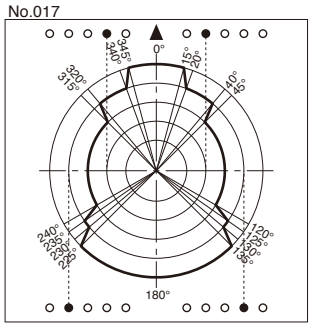

No.018

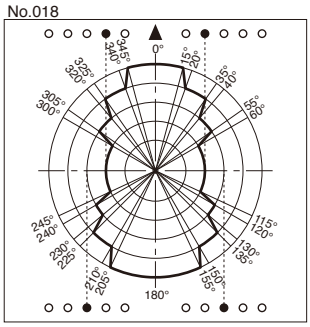

No.019

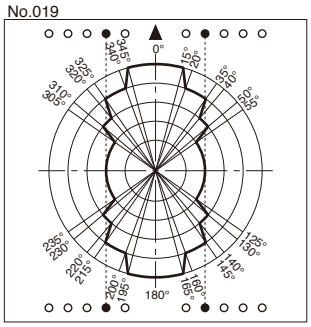

No.020

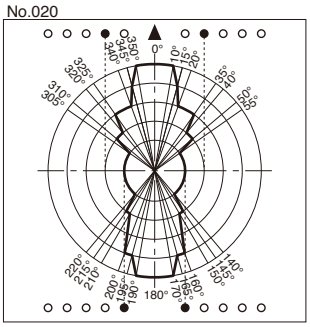

作業領域

No.021

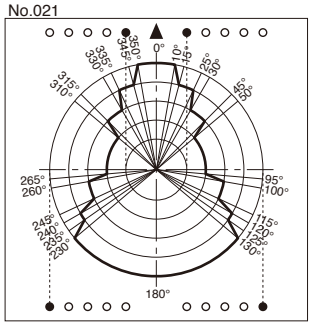

No.022

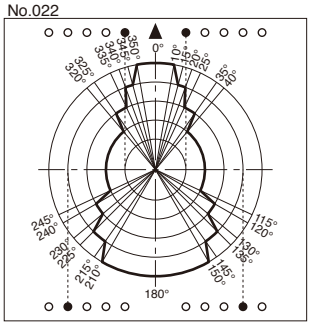

No.023

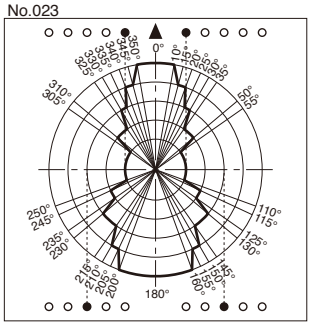

No.024

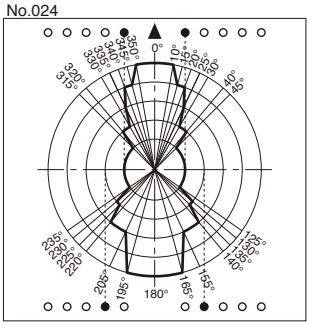

No.025

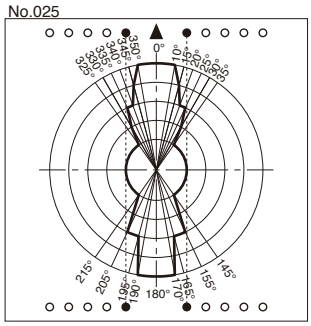

作業領域

■ 作業領域図の見方

作業領域図の円の大きさは、アウトリガ張出幅で決まる性能に対応しています。
さらにカウンタウエイトの装着状態に応じて下表のように制限しています。

	C/W 質量 / O/R 張出幅	適用性能（ブーム作業）						適用性能（フルオートラフィングジブ作業）						適用性能（油圧チルトジブ作業）					
		40.9 t	28.9 t	25.4 t	15.4 t	7.1 t	0 t	40.9 t	28.9 t	25.4 t	15.4 t	7.1 t	0 t	40.9 t	28.9 t	25.4 t	15.4 t	7.1 t	0 t
円 1	7.5 m	○	○	○	○	○	○	○	○	○	○	○		○	○	○	○	○	○
円 2	6.2 m	○	○	○	○	○	○	○	○	○	○			○	○	○	○	○	○
円 3	5.0 m		○	○	○	○	○		○	○	○				○	○	○	○	
円 4	4.1 m				○	○	○										○		
円 5	2.5 m						○												

ー例ー
図のアウトリガ張出幅でブーム作業を行う場合、作業領域別の性能および範囲は、次のようになります。

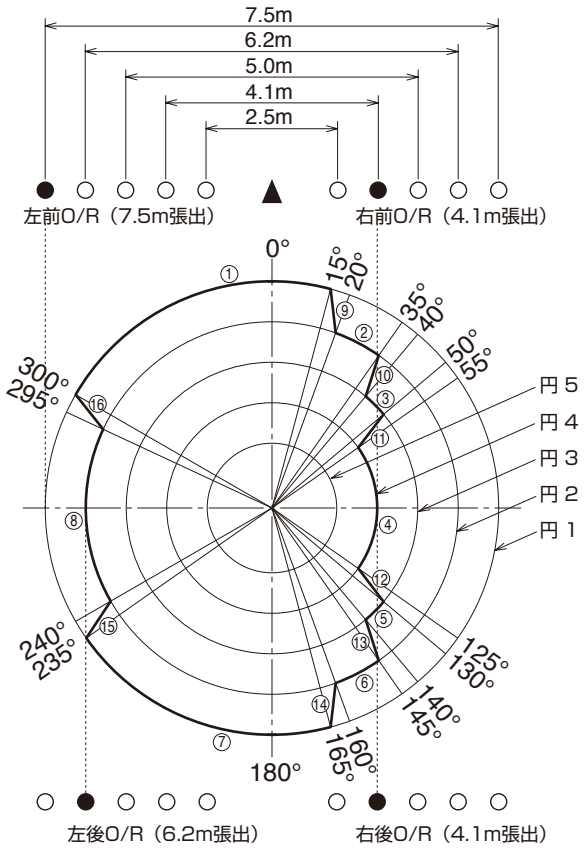

①の領域（300°～ 15°範囲）：最大張出（7.5m）性能
②の領域（ 20°～ 35°範囲）：中間張出（6.2m）性能
③の領域（ 40°～ 50°範囲）：中間張出（5.0m）性能
④の領域（ 55°～125°範囲）：中間張出（4.1m）性能
⑤の領域（130°～140°範囲）：中間張出（5.0m）性能
⑥の領域（145°～160°範囲）：中間張出（6.2m）性能
⑦の領域（165°～235°範囲）：最大張出（7.5m）性能
⑧の領域（240°～295°範囲）：中間張出（6.2m）性能

⑨の領域（ 15°～ 20°範囲）
右旋回時：最大張出（7.5m）性能から
中間張出（6.2m）性能へ比例して減少する。
左旋回時：中間張出（6.2m）性能から
最大張出（7.5m）性能へ比例して増加する。

⑩の領域（ 35°～ 40°範囲）
右旋回時：中間張出（6.2m）性能から
中間張出（5.0m）性能へ比例して減少する。
左旋回時：中間張出（5.0m）性能から
中間張出（6.2m）性能へ比例して増加する。

⑪の領域（ 50°～ 55°範囲）
右旋回時：中間張出（5.0m）性能から
中間張出（4.1m）性能へ比例して減少する。
左旋回時：中間張出（4.1m）性能から
中間張出（5.0m）性能へ比例して増加する。

⑫の領域（125°～130°範囲）
右旋回時：中間張出（4.1m）性能から
中間張出（5.0m）性能へ比例して増加する。
左旋回時：中間張出（5.0m）性能から
中間張出（4.1m）性能へ比例して減少する。

⑬の領域（140°～145°範囲）
右旋回時：中間張出（5.0m）性能から
中間張出（6.2m）性能へ比例して増加する。
左旋回時：中間張出（6.2m）性能から
中間張出（5.0m）性能へ比例して減少する。

⑭の領域（160°～165°範囲）
右旋回時：中間張出（6.2m）性能から
最大張出（7.5m）性能へ比例して増加する。
左旋回時：最大張出（7.5m）性能から
中間張出（6.2m）性能へ比例して減少する。

⑮の領域（235°～240°範囲）
右旋回時：最大張出（7.5m）性能から
中間張出（6.2m）性能へ比例して減少する。
左旋回時：中間張出（6.2m）性能から
最大張出（7.5m）性能へ比例して増加する。

⑯の領域（295°～300°範囲）
右旋回時：中間張出（6.2m）性能から
最大張出（7.5m）性能へ比例して増加する。
左旋回時：最大張出（7.5m）性能から
中間張出（6.2m）性能へ比例して減少する。

オールテレーンクレーン
ATF-140N-5.1
ブーム

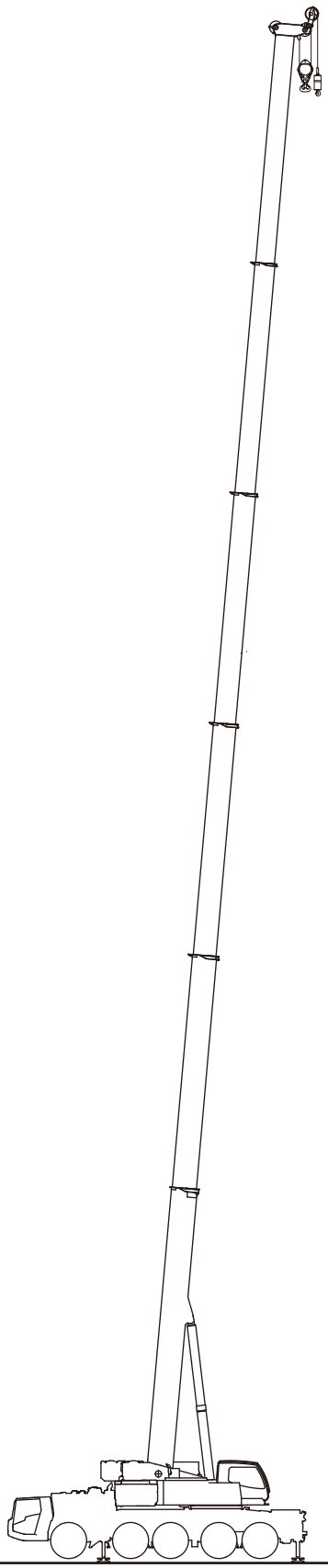

ブーム

ブーム作業半径ー揚程図

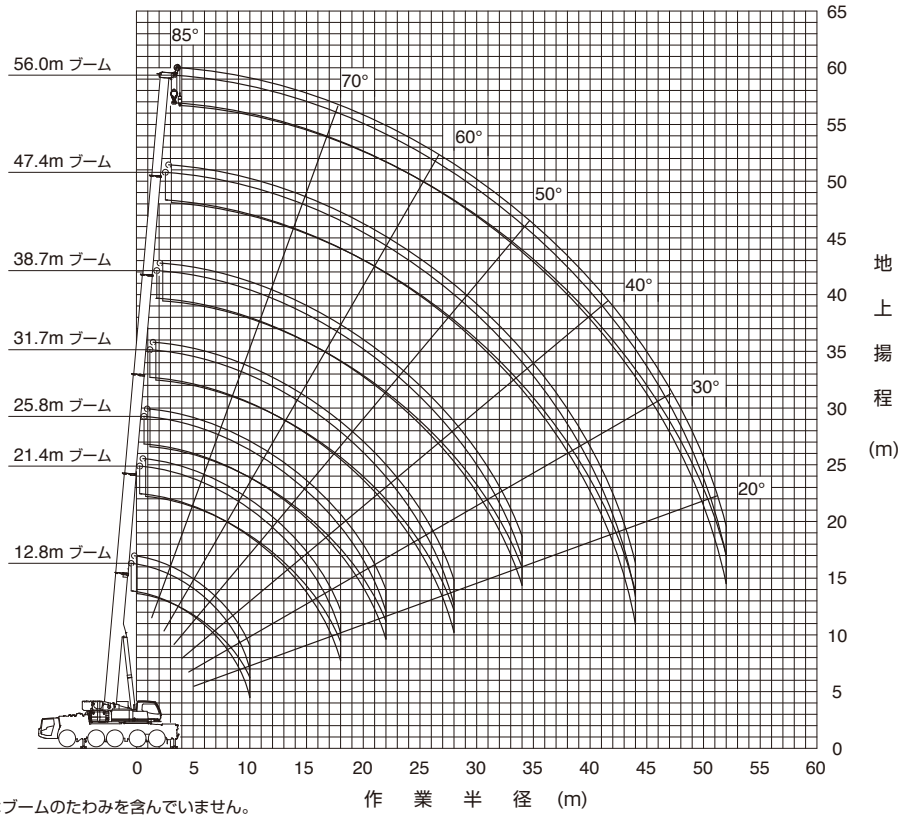

（注意） 1. 上図はブームのたわみを含んでいません。
2. カウンタウエイト40.9ｔ、アウトリガ張出幅7.5m時の性能を図示しています。

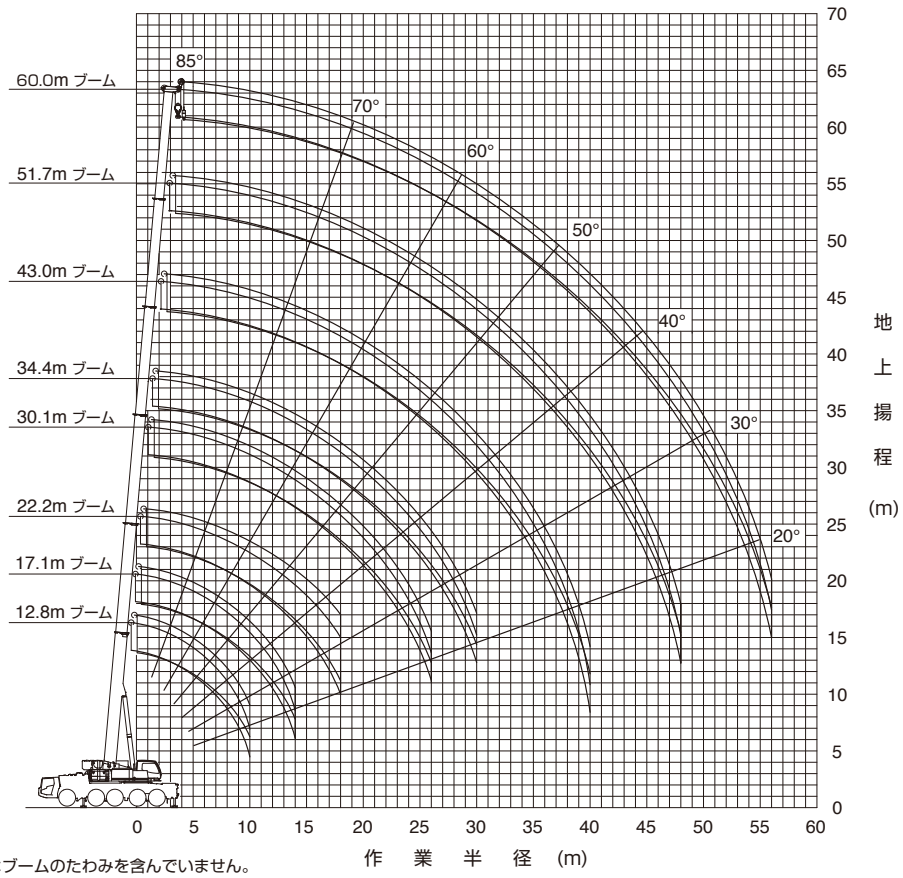

（注意） 1. 上図はブームのたわみを含んでいません。
2. カウンタウエイト40.9ｔ、アウトリガ張出幅7.5m時の性能を図示しています。

ブーム定格総荷重表

■ 定格総荷重表注意事項

◆性能設定のあるカウンタウエイトとアウトリガ張出幅の組合せを、下表に○印で示します。

アウトリガ張出幅 ＼ カウンタウエイト	40.9 t	28.9 t	25.4 t	15.4 t	7.1 t	0 t
7.5 m	○	○	○	○	○	○
6.2 m	○	○	○	○	○	○
5.0 m		○	○	○	○	○
4.1 m				○	○	○
2.5 m						○

※同じブーム長さでも、ブームの伸長状態によって定格総荷重が異なります。

◆定格総荷重は、つり具質量とフック質量（100tフック:1,120kg、60tフック: 600kg、26tフック: 450kg、8.7tフック:300kg）を含んだ値を示します。
◆定格総荷重は、ブームのたわみを含んだ実際の作業半径に基づいています。
◆定格総荷重表中の標準巻掛本数より少ない本数で使用する場合、最大荷重の上限は下表のとおりです。

巻掛本数	12本	11本	10本	9本	8本	7本	6本	5本	4本	3本	2本	1本
最大荷重	99.1t	91.1t	83.1t	75.1t	67.0t	58.8t	50.6t	42.3t	33.9t	25.5t	17.1t	8.7t

◆シングルトップ使用時の巻掛本数は1本（8.7tフック使用）で、定格総荷重はブームの定格総荷重からブームに取り付けられているフックの質量を差し引いた値とし、かつ上限は8.7tです。
◆定格総荷重はアウトリガを水平堅土上に設置したときの値で、太線より上側はクレーンの強度に基づき、下側はクレーンの安定に基づいています。
◆定格総荷重表は、風による影響を含んでいません。瞬間最大風速が10m／s以上の風速では、クレーン作業を中止してください。

定格総荷重表中のシンボル、記号の説明

MB	ブームの定格総荷重を示します。	m	ブーム長さを示します。
	カウンタウエイト（C/W）組合せを示します。	m	作業半径を示します。
	アウトリガ張出幅を示します。	%	ブーム伸縮状態 (伸縮割合 %) を示します。 IDはブーム伸縮状態に対応する番号を示します。 ( ) 内 ID の伸縮過程でも状態設定可能です。
360 ° 0 °	吊上げ可能な旋回範囲を示します。 0°の場合、後方限定を示します。		B ピン（ブーム固定ピン）を挿入していないときの定格総荷重の上限を示します。
			無負荷状態で作動可能なブーム起伏角度範囲を示します。
t JPN	定格総荷重の単位を示します。		標準巻掛本数を示します。
			標準フックを示します。

ブーム

■ 定格総荷重表の見方

1. アウトリガ張出幅とカウンタウエイトの質量に応じた性能を選択します。
2. ブーム長さとIDの欄を見ます。
3. 作業半径の欄を見ます。
4. ブーム長さ、IDと作業半径が交差するところが定格総荷重です。

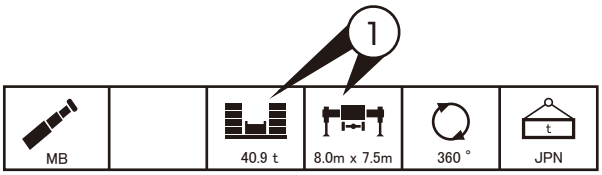

m	12.8	17.1	17.1	17.1	17.1	21.4	21.4	21.4	21.4	21.4	22.2	22.2	22.2	22.3	22.3	25.8	25.8	25.8	25.8	30.1	30.1	30.1	30.1	31.6	m
2.5	114.3																								2.5
3.0	103.6	90.0	90.0	88.0	46.6	90.0	85.7	57.2	46.6	35.3	54.0	38.6	31.8	70.1	84.3										3.0
3.5	94.6	90.0	90.0	84.0	45.2	90.0	80.3	53.4	46.6	33.0	50.5	35.5	29.4	65.5	80.6	70.0	50.0	46.6	34.8						3.5
4.0	87.0	86.8	87.2	79.0	42.8	87.0	75.6	50.1	46.0	31.0	47.4	33.0	27.3	61.4	75.6	70.0	50.0	46.6	33.0						4.0
4.5	80.4	80.2	80.6	74.5	40.7	80.4	71.4	47.1	44.0	29.3	44.6	30.7	25.5	57.9	71.2	70.0	50.0	45.7	31.1	54.3	50.0	42.4	26.7	32.0	4.5
5.0	74.7	74.5	74.9	70.6	38.8	74.7	67.6	44.5	42.1	27.7	42.1	28.7	23.9	54.7	67.4	70.0	50.0	44.0	29.4	51.3	50.0	42.4	25.6	30.4	5.0
6.0	64.8	64.5	65.1	63.8	35.5	64.8	61.2	40.1	38.5	25.0	37.9	25.4	21.2	49.3	60.7	65.5	50.0	41.0	26.5	46.1	50.0	42.4	23.3	26.8	6.0
7.0	56.7	56.3	57.0	57.4	32.8	56.7	55.8	36.5	35.1	22.7	34.5	22.8	19.0	44.8	55.2	57.3	46.6	37.3	24.1	41.8	49.3	39.6	21.2	24.0	7.0
8.0	49.8	49.5	50.1	50.7	30.5	49.9	50.8	33.4	32.3	20.9	31.2	20.6	17.3	41.1	49.0	50.6	43.2	34.3	22.1	38.2	46.0	36.7	19.4	21.7	8.0
9.0	44.0	43.6	44.3	44.9	28.5	44.1	45.0	30.8	29.9	19.2	28.5	18.8	15.8	37.9	43.2	44.8	40.2	31.7	20.4	35.2	43.1	34.2	17.8	19.7	9.0
10.0	39.3	38.8	39.5	40.1	26.9	39.3	40.2	28.6	27.8	17.6	26.2	17.2	14.5	34.9	38.4	40.0	37.7	29.5	19.0	32.6	40.6	32.0	16.5	18.1	10.0
11.0		34.8	35.5	36.0	25.4	35.2	36.2	26.7	26.0	16.3	24.3	15.9	13.5	32.3	34.4	35.9	35.4	27.6	17.7	30.3	36.8	30.0	15.3	16.6	11.0
12.0		31.4	32.1	32.6	24.2	31.8	32.8	25.0	24.5	15.1	22.5	14.8	12.5	30.0	30.9	32.5	33.5	25.9	16.6	28.3	33.4	28.3	14.2	15.4	12.0
14.0		25.9	26.6	27.2	22.5	26.3		22.3	21.9	13.2	19.7	12.9	11.0	26.3	25.5	27.0	28.3	23.0	14.8	24.9	27.9	25.4	12.3	13.4	14.0
16.0						22.2		20.1	19.9	11.8	17.5	11.5	9.8	22.5	21.3	22.8	24.1	20.8	13.3	22.3	23.6	23.1	10.9	11.8	16.0
18.0						18.3		18.5	18.4	10.6	15.8	10.3	8.9	18.6	17.4	18.9	20.2	18.9	12.1	18.6	19.8	21.0	9.7	10.5	18.0
20.0																15.9	17.1	17.4	11.1	15.5	16.7	17.8	8.7	9.4	20.0
22.0																13.6	14.7	15.6	10.4	13.1	14.3	15.4	7.9	8.5	22.0
24.0																				11.2	12.3	13.4	7.2	7.7	24.0
26.0																				9.7	10.8	11.8	6.7	7.1	26.0
28.0																								6.5	28.0
30.0																									30.0
32.0																									32.0
34.0																									34.0
36.0																									36.0
38.0																									38.0
40.0																									40.0
42.0																									42.0
44.0																									44.0
46.0																									46.0
48.0																									48.0
50.0																									50.0
52.0																									52.0
54.0																									54.0
56.0																									56.0
1	0	46	0	0	0	46	0	0	0	0	0	0	0	0	100	46	0	0	0	92	46	0	0	0	1
2	0	0	46	0	0	46	46	0	0	0	0	0	0	100	0	46	46	0	0	46	46	46	0	0	2
3	0	0	0	46	0	0	46	92	0	0	100	0	0	0	0	46	46	46	0	46	46	46	0	100	3
4	0	0	0	0	0	0	0	0	46	0	0	100	0	0	0	0	46	46	46	0	46	46	92	100	4
5	0	0	0	0	46	0	0	0	46	92	0	0	100	0	0	0	0	46	92	0	0	46	92	0	5
ID	1	68	71 (76)	64 (67)	2 (32)	76	65 (67)	74	25 (38)	3 (24)	75	60 (63)	4 (16)	73	70	66	53 (55)	33 (42)	17 (24)	67	54	39 (50)	18 (24)	63	ID
t	31.9	27.3	32.7	34.4	34.5	30.4	31.9	23.3	33.3	27.8	24.7	22.9	22.9	24.2	22.8	30.0	32.1	32.3	32.2	26.5	29.9	30.7	26.7	24.2	t
[DEG]	0~85	0~85	0~85	0~85	0~85	0~85		0~85	0~85	0~85	0~85	0~85	0~85	0~85	0~85	0~85	0~85	0~85	0~85	0~85	0~85	0~85	0~85	0~85	[DEG]
	20	11	11	11	6	11		7	6	5	7	5	4	9	11	9	6	6	5	7	6	6	4	4	
	100t×2	100t	100t	100t	60t	100t	100t	60t	60t	60t	60t	60t	60t	100t	100t	100t	60t	60t	60t	100t	60t	60t	60t	60t	

■ 性能ブロック図

性能ブロックはブームの伸縮操作だけでブーム伸縮状態を変更できる一連のIDをまとめたものです。
同じブロック内であればブームの伸縮状態の変更が容易に行えます。

IDはブーム伸縮状態に対応する番号を示します。
ブームの伸縮割合の組み合わせによってブーム伸縮状態が異なります。
同じブーム長さであってもブームの伸縮割合が変わればIDが変わります。

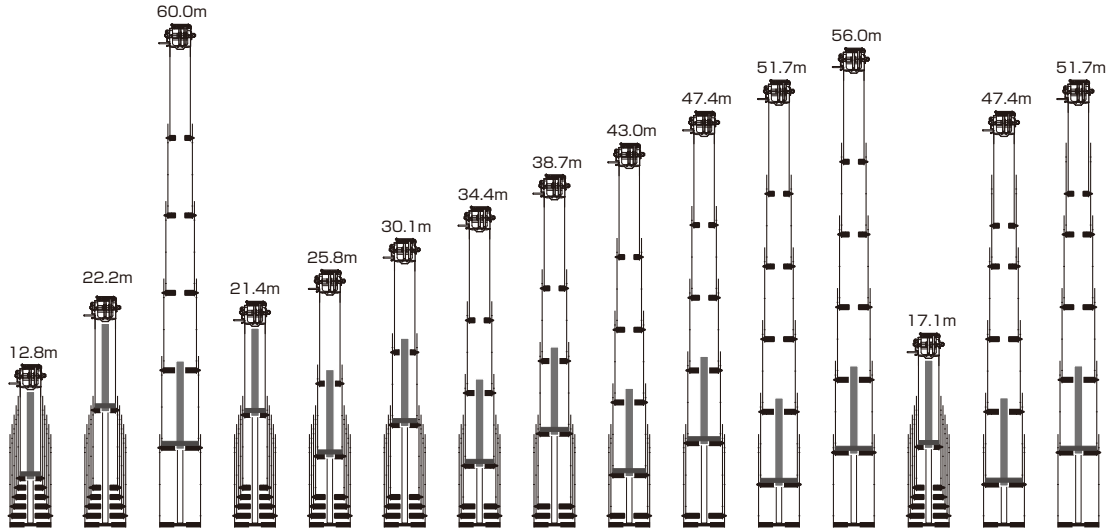

性能ブロック	1			2									3		
ID	1	4	16	3	17	18	19	20	21	22	23	24	2	31	32

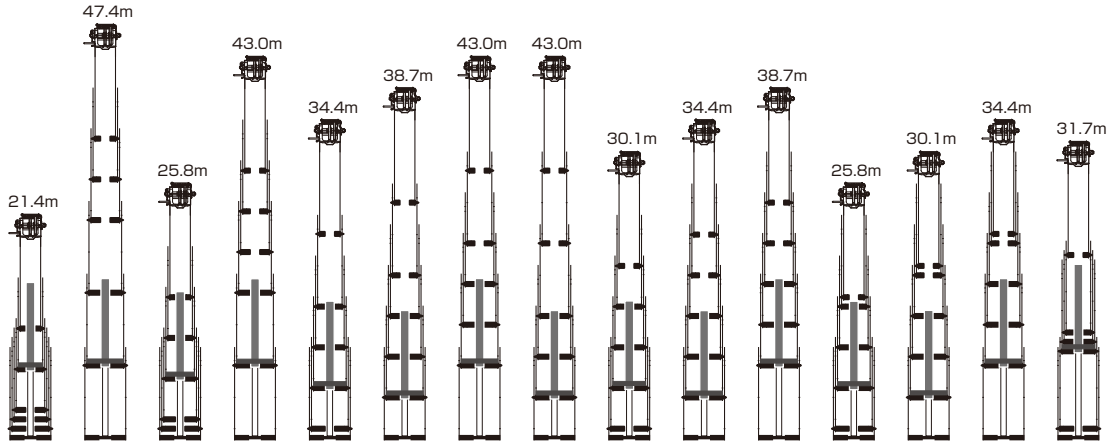

性能ブロック	4		5		6			7	8			9			10
ID	25	38	33	42	44	45	46	48	39	49	50	53	54	55	58

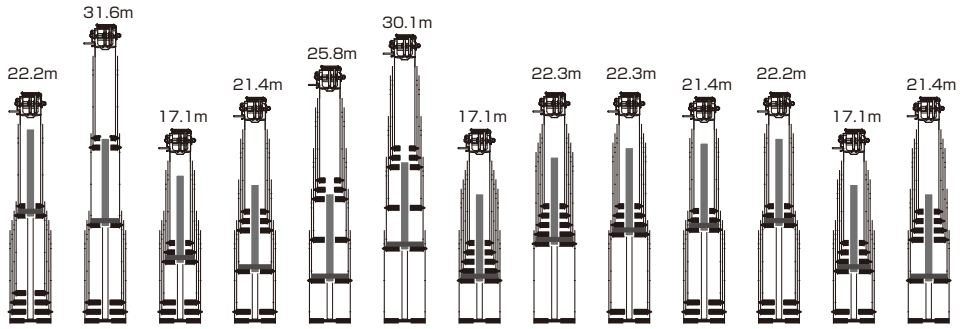

性能ブロック	11		12				13		14	15		16	
ID	60	63	64	65	66	67	68	70	73	74	75	71	76

ブーム

MB		40.9 t	8.0m x 7.5m	0 °	JPN

m	12.8	m
2.5	140.0	2.5
3.0	110.2	3.0
3.5	99.6	3.5
4.0	90.8	4.0
4.5	83.3	4.5
5.0	76.9	5.0
6.0	66.5	6.0
7.0	58.3	7.0
8.0	51.8	8.0
9.0	46.4	9.0
10.0	42.0	10.0
11.0		11.0
12.0		12.0
14.0		14.0
16.0		16.0
18.0		18.0
20.0		20.0
22.0		22.0
24.0		24.0
26.0		26.0
28.0		28.0
30.0		30.0
32.0		32.0
34.0		34.0
36.0		36.0
38.0		38.0
40.0		40.0
42.0		42.0
44.0		44.0
46.0		46.0
48.0		48.0
50.0		50.0
52.0		52.0
54.0		54.0
56.0		56.0
1	0	1
2	0	2
3	0	3
4	0	4
5	0	5
ID	1	ID
t	31.9	t
[DEG]	0~85	[DEG]
	20	
	100t×2	

MB		40.9 t	8.0m x 7.5m	360 °	JPN

m	12.8	17.1	17.1	17.1	17.1	21.4	21.4	21.4	21.4	21.4	22.2	22.2	22.2	22.3	22.3	25.8	25.8	25.8	25.8	30.1	30.1	30.1	30.1	31.6	m
2.5	114.3																								2.5
3.0	103.6	90.0	90.0	88.0	46.6	90.0	85.7	57.2	46.6	35.3	54.0	38.6	31.8	70.1	84.3										3.0
3.5	94.6	90.0	90.0	84.0	45.2	90.0	80.3	53.4	46.6	33.0	50.5	35.5	29.4	65.5	80.6	70.0	50.0	46.6	34.8						3.5
4.0	87.0	86.8	87.2	79.0	42.8	87.0	75.6	50.1	46.0	31.0	47.4	33.0	27.3	61.4	75.6	70.0	50.0	46.6	33.0						4.0
4.5	80.4	80.2	80.6	74.5	40.7	80.4	71.4	47.1	44.0	29.3	44.6	30.7	25.5	57.9	71.2	70.0	50.0	45.7	31.1	54.3	50.0	42.4	26.7	32.0	4.5
5.0	74.7	74.5	74.9	70.6	38.8	74.7	67.6	44.5	42.1	27.7	42.1	28.7	23.9	54.7	67.4	70.0	50.0	44.0	29.4	51.3	50.0	42.4	25.6	30.4	5.0
6.0	64.8	64.5	65.1	63.8	35.5	64.8	61.2	40.1	38.5	25.0	37.9	25.4	21.2	49.3	60.7	65.5	50.0	41.0	26.5	46.1	50.0	42.4	23.3	26.8	6.0
7.0	56.7	56.3	57.0	57.4	32.8	56.7	55.8	36.5	35.1	22.7	34.5	22.8	19.0	44.8	55.2	57.3	46.6	37.3	24.1	41.8	49.3	39.6	21.2	24.0	7.0
8.0	49.8	49.5	50.1	50.7	30.5	49.9	50.8	33.4	32.3	20.9	31.2	20.6	17.3	41.1	49.0	50.6	43.2	34.3	22.1	38.2	46.0	36.7	19.4	21.7	8.0
9.0	44.0	43.6	44.3	44.9	28.5	44.1	45.0	30.8	29.9	19.2	28.5	18.8	15.8	37.9	43.2	44.8	40.2	31.7	20.4	35.2	43.1	34.2	17.8	19.7	9.0
10.0	39.3	38.8	39.5	40.1	26.9	39.3	40.2	28.6	27.8	17.6	26.2	17.2	14.5	34.9	38.4	40.0	37.7	29.5	19.0	32.6	40.6	32.0	16.5	18.1	10.0
11.0		34.8	35.5	36.0	25.4	35.2	36.2	26.7	26.0	16.3	24.3	15.9	13.5	32.3	34.4	35.9	35.4	27.6	17.7	30.3	36.8	30.0	15.3	16.6	11.0
12.0		31.4	32.1	32.6	24.2	31.8	32.8	25.0	24.5	15.1	22.5	14.8	12.5	30.0	30.9	32.5	33.5	25.9	16.6	28.3	33.4	28.3	14.2	15.4	12.0
14.0		25.9	26.6	27.2	22.5	26.3	27.3	22.3	21.9	13.2	19.7	12.9	11.0	26.3	25.5	27.0	28.3	23.0	14.8	24.9	27.9	25.4	12.3	13.4	14.0
16.0						22.2	23.1	20.1	19.9	11.8	17.5	11.5	9.8	22.5	21.3	22.8	24.1	20.8	13.3	22.3	23.6	23.1	10.9	11.8	16.0
18.0						18.3	19.3	18.5	18.4	10.6	15.8	10.3	8.9	18.6	17.4	18.9	20.2	18.9	12.1	18.6	19.8	21.0	9.7	10.5	18.0
20.0																15.9	17.1	17.4	11.1	15.5	16.7	17.8	8.7	9.4	20.0
22.0																13.6	14.7	15.6	10.4	13.1	14.3	15.4	7.9	8.5	22.0
24.0																				11.2	12.3	13.4	7.2	7.7	24.0
26.0																				9.7	10.8	11.8	6.7	7.1	26.0
28.0																								6.5	28.0
30.0																									30.0
32.0																									32.0
34.0																									34.0
36.0																									36.0
38.0																									38.0
40.0																									40.0
42.0																									42.0
44.0																									44.0
46.0																									46.0
48.0																									48.0
50.0																									50.0
52.0																									52.0
54.0																									54.0
56.0																									56.0
1	0	46	0	0	0	46	0	0	0	0	0	0	0	0	100	46	0	0	0	92	46	0	0	0	1
2	0	0	46	0	0	46	46	0	0	0	0	0	0	100	0	46	46	0	0	46	46	46	0	0	2
3	0	0	0	46	0	0	46	92	0	0	100	0	0	0	0	46	46	46	0	46	46	46	0	100	3
4	0	0	0	0	0	0	0	0	46	0	0	100	0	0	0	0	46	46	46	0	46	46	92	100	4
5	0	0	0	0	46	0	0	0	46	92	0	0	100	0	0	0	0	46	92	0	0	46	92	0	5
ID	1	68	71 (76)	64 (67)	2 (32)	76	65 (67)	74	25 (38)	3 (24)	75	60 (63)	4 (16)	73	70	66	53 (55)	33 (42)	17 (24)	67	54	39 (50)	18 (24)	63	ID
t	31.9	27.3	32.7	34.4	34.5	30.4	31.9	23.3	33.3	27.8	24.7	22.9	22.9	24.2	22.8	30.0	32.1	32.3	32.2	26.5	29.9	30.7	26.7	24.2	t
[DEG]	0~85	0~85	0~85	0~85	0~85	0~85	0~85	0~85	0~85	0~85	0~85	0~85	0~85	0~85	0~85	0~85	0~85	0~85	0~85	0~85	0~85	0~85	0~85	0~85	[DEG]
	20	11	11	11	6	11	11	7	6	5	7	5	4	9	11	9	6	6	5	7	6	6	4	4	
	100t×2	100t	100t	100t	60t	100t	100t	60t	60t	60t	60t	60t	60t	100t	100t	100t	60t	60t	60t	100t	60t	60t	60t	60t	

m	31.7	34.4	34.4	34.4	34.4	38.7	38.7	38.7	43.0	43.0	43.0	43.0	47.4	47.4	47.4	51.7	51.7	56.0	60.0	m
2.5																				2.5
3.0																				3.0
3.5																				3.5
4.0																				4.0
4.5																				4.5
5.0	30.0	44.0	38.0	29.5	25.2															5.0
6.0	27.4	42.3	38.0	28.8	23.6	32.8	27.4	20.5												6.0
7.0	25.0	38.4	38.0	26.8	22.1	32.8	27.0	20.5	27.1	23.1	20.7	19.0								7.0
8.0	22.9	35.2	38.0	24.9	20.5	32.8	25.7	20.1	27.1	23.1	20.6	19.0	21.4	18.6	15.7					8.0
9.0	21.2	32.4	35.8	23.3	19.1	30.3	24.5	18.5	27.1	23.1	19.6	18.6	21.4	18.6	15.7	16.6	14.3			9.0
10.0	19.6	30.0	33.7	21.9	17.8	28.1	23.2	17.2	26.2	23.1	18.7	17.8	21.4	18.6	15.7	16.6	14.3	13.2		10.0
11.0	18.3	27.9	31.8	20.6	16.6	26.2	21.9	16.0	24.7	22.3	17.9	16.9	21.4	18.6	15.7	16.6	14.3	13.2	10.6	11.0
12.0	17.2	26.0	30.1	19.5	15.6	24.5	20.8	14.9	23.1	21.4	17.1	15.8	21.3	18.4	15.7	16.6	14.3	13.2	10.6	12.0
14.0	15.3	23.0	27.2	17.5	14.0	21.6	18.8	13.2	20.4	19.6	15.7	14.1	19.2	16.7	14.7	16.6	14.3	13.2	10.6	14.0
16.0	13.7	20.5	24.4	16.0	12.5	19.3	17.2	11.8	18.2	18.0	14.4	12.7	17.4	15.2	13.3	15.6	13.6	13.2	10.6	16.0
18.0	12.5	18.5	20.5	14.7	11.2	17.4	15.9	10.6	16.4	16.7	13.2	11.5	15.7	13.9	12.1	14.5	12.6	12.6	10.6	18.0
20.0	11.4	16.2	17.4	13.6	10.2	15.8	14.7	9.6	14.9	15.2	12.2	10.5	14.1	12.8	11.1	13.5	11.6	11.9	10.5	20.0
22.0	10.6	13.8	15.0	12.6	9.3	14.5	13.7	8.8	13.4	13.9	11.3	9.7	12.7	11.8	10.3	12.2	10.8	11.2	9.7	22.0
24.0	9.8	11.9	13.0	11.8	8.5	12.6	12.9	8.0	12.2	12.7	10.6	8.9	11.5	10.9	9.4	11.0	10.0	10.4	9.0	24.0
26.0	9.2	10.3	11.4	11.2	7.9	11.0	12.0	7.3	11.0	11.5	9.8	8.3	10.5	10.1	8.6	10.0	9.4	9.8	8.2	26.0
28.0	8.7	8.9	10.1	10.6	7.3	9.6	10.6	6.8	9.6	10.2	9.1	7.6	9.6	9.3	7.9	9.2	8.7	9.0	7.5	28.0
30.0		7.8	8.9	9.9	6.8	8.5	9.4	6.2	8.5	9.0	8.5	7.1	8.7	8.6	7.3	8.4	8.1	8.3	6.9	30.0
32.0						7.5	8.4	5.8	7.5	8.0	8.0	6.6	7.7	7.9	6.7	7.8	7.5	7.6	6.3	32.0
34.0						6.7	7.6	5.4	6.6	7.2	7.5	6.2	6.8	7.4	6.2	7.2	7.0	7.1	5.8	34.0
36.0									5.9	6.4	7.1	5.8	6.1	6.7	5.8	6.4	6.5	6.6	5.4	36.0
38.0									5.2	5.7	6.4	5.4	5.4	6.0	5.4	5.7	6.1	6.1	5.0	38.0
40.0									4.7	5.2	5.9	5.1	4.8	5.4	5.1	5.1	5.7	5.4	4.6	40.0
42.0													4.3	4.9	4.7	4.6	5.3	4.9	4.3	42.0
44.0													3.8	4.5	4.5	4.1	4.8	4.4	4.0	44.0
46.0																3.6	4.3	4.0	3.8	46.0
48.0																3.2	4.0	3.6	3.5	48.0
50.0																		3.2	3.2	50.0
52.0																		2.8	2.8	52.0
54.0																			2.5	54.0
56.0																			2.2	56.0
1	0	92	46	0	0	92	46	0	92	92	46	0	92	46	0	92	46	92	100	1
2	100	46	46	46	0	46	46	0	92	46	46	46	92	92	92	92	92	92	100	2
3	0	46	46	46	46	46	46	92	46	46	46	92	92	92	92	92	92	92	100	3
4	0	46	46	46	92	46	46	92	46	46	92	92	46	92	92	92	92	92	100	4
5	100	0	46	92	92	46	92	92	46	92	92	92	46	46	92	46	92	92	100	5
ID	58	55	49	44 (46)	19(24)	50	45	20 (24)	42	46	48	21	38	31	22 (24)	32	23	24	16	ID
t	22.8	26.5	28.8	29.5	25.2	27.1	27.4	20.5	26.6	23.1	20.7	19.0	21.4	18.6	15.7	16.6	14.3	13.2	10.6	t
[DEG]	0~85	0~85	0~85	0~85	0~85	0~85	0~85	0~85	0~85	0~85	0~85	0~85	0~85	0~85	0~85	0~85	0~85	0~85	0~85	[DEG]
	4	6	5	4	3	4	4	3	4	3	3	3	3	3	2	2	2	2	2	
	60t	60t	60t	60t	26t	60t	60t	26t	60t	26t	26t	26t	26t	26t	26t	26t	26t	26t	26t	

ブーム

MB		40.9 t	8.0m x 6.2m	0 °	JPN

m	12.8	m
2.5	123.0	2.5
3.0	110.2	3.0
3.5	99.6	3.5
4.0	90.8	4.0
4.5	83.3	4.5
5.0	76.9	5.0
6.0	66.5	6.0
7.0	58.3	7.0
8.0	51.8	8.0
9.0	46.4	9.0
10.0	42.0	10.0
11.0		11.0
12.0		12.0
14.0		14.0
16.0		16.0
18.0		18.0
20.0		20.0
22.0		22.0
24.0		24.0
26.0		26.0
28.0		28.0
30.0		30.0
32.0		32.0
34.0		34.0
36.0		36.0
38.0		38.0
40.0		40.0
42.0		42.0
44.0		44.0
46.0		46.0
48.0		48.0
50.0		50.0
52.0		52.0
54.0		54.0
56.0		56.0
1	0	1
2	0	2
3	0	3
4	0	4
5	0	5
ID	1	ID
t	31.9	t
[DEG]	0~85	[DEG]
	20	
	100t×2	

MB		40.9 t	8.0m x 6.2m	360 °	JPN

m	12.8	17.1	17.1	17.1	17.1	21.4	21.4	21.4	21.4	21.4	22.2	22.2	22.2	22.3	22.3	25.8	25.8	25.8	25.8	30.1	30.1	30.1	30.1	31.6	m
2.5	113.9																								2.5
3.0	102.3	90.0	90.0	88.0	46.6	90.0	85.7	57.2	46.6	35.3	54.0	38.6	31.8	70.1	84.3										3.0
3.5	92.6	90.0	90.0	84.0	45.2	90.0	80.3	53.4	46.6	33.0	50.5	35.5	29.4	65.5	80.6	70.0	50.0	46.6	34.8						3.5
4.0	84.3	84.1	84.6	79.0	42.8	84.4	75.6	50.1	46.0	31.0	47.4	33.0	27.3	61.4	75.6	70.0	50.0	46.6	33.0						4.0
4.5	77.2	77.0	77.6	74.5	40.7	77.3	71.4	47.1	44.0	29.3	44.6	30.7	25.5	57.9	71.2	70.0	50.0	45.7	31.1	54.3	50.0	42.4	26.7	32.0	4.5
5.0	71.1	70.8	71.4	70.6	38.8	71.2	67.6	44.5	42.1	27.7	42.1	28.7	23.9	54.7	67.4	70.0	50.0	44.0	29.4	51.3	50.0	42.4	25.6	30.4	5.0
6.0	61.0	60.7	61.3	61.8	35.5	61.1	61.2	40.1	38.5	25.0	37.9	25.4	21.2	49.3	60.3	61.7	50.0	41.0	26.5	46.1	50.0	42.4	23.3	26.8	6.0
7.0	53.1	52.8	53.4	53.9	32.8	53.2	54.1	36.5	35.1	22.7	34.5	22.8	19.0	44.8	52.4	53.8	46.6	37.3	24.1	41.8	49.3	39.6	21.2	24.0	7.0
8.0	46.6	46.2	46.9	47.5	30.5	46.6	47.6	33.4	32.3	20.9	31.2	20.6	17.3	41.1	45.8	47.4	43.2	34.3	22.1	38.2	46.0	36.7	19.4	21.7	8.0
9.0	41.0	40.6	41.3	41.9	28.5	41.1	42.1	30.8	29.9	19.2	28.5	18.8	15.8	37.9	40.2	41.8	40.2	31.7	20.4	35.2	42.6	34.2	17.8	19.7	9.0
10.0	36.5	36.0	36.7	37.3	26.9	36.5	37.5	28.6	27.8	17.6	26.2	17.2	14.5	34.9	35.6	37.2	37.7	29.5	19.0	32.6	38.0	32.0	16.5	18.1	10.0
11.0		32.2	32.9	33.4	25.4	32.6	33.6	26.7	26.0	16.3	24.3	15.9	13.5	32.3	31.7	33.3	34.6	27.6	17.7	30.3	34.2	30.0	15.3	16.6	11.0
12.0		29.0	29.7	30.2	24.2	29.4	30.4	25.0	24.5	15.1	22.5	14.8	12.5	29.7	28.5	30.1	31.4	25.9	16.6	28.3	30.9	28.3	14.2	15.4	12.0
14.0		22.4	23.1	23.8	22.5	22.8	23.9	22.3	21.9	13.2	19.7	12.9	11.0	23.2	21.9	23.6	25.0	23.0	14.8	23.2	24.5	25.4	12.3	13.4	14.0
16.0						18.2	19.2	19.5	19.9	11.8	17.5	11.5	9.8	18.6	17.3	18.9	20.2	20.8	13.3	18.5	19.8	21.0	10.9	11.8	16.0
18.0						14.8	15.8	16.1	17.4	10.6	15.8	10.3	8.9	15.1	13.9	15.5	16.7	17.6	12.1	15.1	16.3	17.5	9.7	10.5	18.0
20.0																12.9	14.1	14.9	11.1	12.5	13.6	14.8	8.7	9.4	20.0
22.0																10.8	12.0	12.9	10.4	10.4	11.6	12.7	7.9	8.5	22.0
24.0																				8.8	9.9	11.0	7.2	7.7	24.0
26.0																				7.4	8.5	9.6	6.7	7.1	26.0
28.0																								6.5	28.0
30.0																									30.0
32.0																									32.0
34.0																									34.0
36.0																									36.0
38.0																									38.0
40.0																									40.0
42.0																									42.0
44.0																									44.0
46.0																									46.0
48.0																									48.0
50.0																									50.0
52.0																									52.0
54.0																									54.0
56.0																									56.0
1	0	46	0	0	0	46	0	0	0	0	0	0	0	0	100	46	0	0	0	92	46	0	0	0	1
2	0	0	46	0	0	46	46	0	0	0	0	0	0	100	0	46	46	0	0	46	46	46	0	0	2
3	0	0	0	46	0	0	46	92	0	0	100	0	0	0	0	46	46	46	0	46	46	46	0	100	3
4	0	0	0	0	0	0	0	0	46	0	0	100	0	0	0	0	46	46	46	0	46	46	92	100	4
5	0	0	0	0	46	0	0	0	46	92	0	0	100	0	0	0	0	46	92	0	0	46	92	0	5
ID	1	68	71 (76)	64 (67)	2 (32)	76	65 (67)	74	25 (38)	3 (24)	75	60 (63)	4 (16)	73	70	66	53 (55)	33 (42)	17 (24)	67	54	39 (50)	18 (24)	63	ID
t	31.9	27.3	32.7	34.4	34.5	30.4	31.9	23.3	33.3	27.8	24.7	22.9	22.9	24.2	22.8	30.0	32.1	32.3	32.2	26.5	29.9	30.7	26.7	24.2	t
[DEG]	0~85	0~85	0~85	0~85	0~85	0~85	0~85	0~85	0~85	0~85	0~85	0~85	0~85	0~85	0~85	0~85	0~85	0~85	0~85	0~85	0~85	0~85	0~85	0~85	[DEG]
	20	11	11	11	6	11	11	7	6	5	7	5	4	9	11	9	6	6	5	7	6	6	4	4	
	100t×2	100t	100t	100t	60t	100t	100t	60t	60t	60t	60t	60t	60t	100t	100t	100t	60t	60t	60t	100t	60t	60t	60t	60t	

m	31.7	34.4	34.4	34.4	34.4	38.7	38.7	38.7	43.0	43.0	43.0	43.0	47.4	47.4	47.4	51.7	51.7	56.0	60.0	m
2.5																				2.5
3.0																				3.0
3.5																				3.5
4.0																				4.0
4.5																				4.5
5.0	30.0	44.0	38.0	29.5	25.2															5.0
6.0	27.4	42.3	38.0	28.8	23.6	32.8	27.4	20.5												6.0
7.0	25.0	38.4	38.0	26.8	22.1	32.8	27.0	20.5	27.1	23.1	20.7	19.0								7.0
8.0	22.9	35.2	38.0	24.9	20.5	32.8	25.7	20.1	27.1	23.1	20.6	19.0	21.4	18.6	15.7					8.0
9.0	21.2	32.4	35.8	23.3	19.1	30.3	24.5	18.5	27.1	23.1	19.6	18.6	21.4	18.6	15.7	16.6	14.3			9.0
10.0	19.6	30.0	33.7	21.9	17.8	28.1	23.2	17.2	26.2	23.1	18.7	17.8	21.4	18.6	15.7	16.6	14.3	13.2		10.0
11.0	18.3	27.9	31.8	20.6	16.6	26.2	21.9	16.0	24.7	22.3	17.9	16.9	21.4	18.6	15.7	16.6	14.3	13.2	10.6	11.0
12.0	17.2	26.0	30.1	19.5	15.6	24.5	20.8	14.9	23.1	21.4	17.1	15.8	21.3	18.4	15.7	16.6	14.3	13.2	10.6	12.0
14.0	15.3	23.0	25.4	17.5	14.0	21.6	18.8	13.2	20.4	19.6	15.7	14.1	19.2	16.7	14.7	16.6	14.3	13.2	10.6	14.0
16.0	13.7	19.2	20.6	16.0	12.5	19.3	17.2	11.8	18.2	18.0	14.4	12.7	17.4	15.2	13.3	15.6	13.6	13.2	10.6	16.0
18.0	12.5	15.8	17.0	14.7	11.2	16.6	15.9	10.6	16.4	16.7	13.2	11.5	15.7	13.9	12.1	14.5	12.6	12.6	10.6	18.0
20.0	11.4	13.2	14.4	13.6	10.2	13.9	14.7	9.6	13.9	14.5	12.2	10.5	14.1	12.8	11.1	13.5	11.6	11.9	10.5	20.0
22.0	10.6	11.1	12.3	12.6	9.3	11.8	12.8	8.8	11.8	12.4	11.3	9.7	12.1	11.8	10.3	12.2	10.8	11.2	9.7	22.0
24.0	9.8	9.4	10.6	11.6	8.5	10.1	11.1	8.0	10.1	10.7	10.6	8.9	10.4	10.9	9.4	10.8	10.0	10.4	9.0	24.0
26.0	9.2	8.0	9.2	10.2	7.9	8.7	9.7	7.3	8.7	9.3	9.8	8.3	9.0	9.6	8.6	9.3	9.4	9.7	8.2	26.0
28.0	8.3	6.9	8.0	9.0	7.3	7.6	8.5	6.8	7.6	8.1	8.8	7.6	7.8	8.5	7.9	8.2	8.7	8.5	7.5	28.0
30.0		5.9	7.0	8.0	6.8	6.6	7.5	6.2	6.6	7.1	7.8	7.1	6.8	7.4	7.3	7.1	7.9	7.5	6.9	30.0
32.0						5.7	6.7	5.8	5.7	6.3	7.0	6.6	5.9	6.6	6.7	6.3	7.0	6.6	6.3	32.0
34.0						5.0	5.9	5.4	5.0	5.5	6.2	6.2	5.2	5.8	6.2	5.5	6.2	5.9	5.8	34.0
36.0									4.3	4.9	5.6	5.8	4.5	5.2	5.8	4.9	5.6	5.2	5.2	36.0
38.0									3.8	4.3	5.0	5.4	4.0	4.6	5.2	4.3	5.0	4.6	4.6	38.0
40.0									3.3	3.8	4.5	4.9	3.4	4.1	4.7	3.8	4.4	4.1	4.1	40.0
42.0													2.9	3.6	4.2	3.3	4.0	3.6	3.6	42.0
44.0													2.5	3.2	3.8	2.8	3.6	3.2	3.2	44.0
46.0																2.4	3.2	2.8	2.8	46.0
48.0																2.1	2.8	2.4	2.4	48.0
50.0																		2.1	2.1	50.0
52.0																		1.8	1.8	52.0
54.0																			1.5	54.0
56.0																			1.2	56.0
1	0	92	46	0	0	92	46	0	92	92	46	0	92	46	0	92	46	92	100	1
2	100	46	46	46	0	46	46	0	92	46	46	46	92	92	92	92	92	92	100	2
3	0	46	46	46	46	46	46	92	46	46	46	92	92	92	92	92	92	92	100	3
4	0	46	46	46	92	46	46	92	46	46	92	92	46	92	92	92	92	92	100	4
5	100	0	46	92	92	46	92	92	46	92	92	92	46	46	92	46	92	92	100	5
ID	58	55	49	44 (46)	19(24)	50	45	20 (24)	42	46	48	21	38	31	22 (24)	32	23	24	16	ID
t	22.8	26.5	28.8	29.5	25.2	27.1	27.4	20.5	26.6	23.1	20.7	19.0	21.4	18.6	15.7	16.6	14.3	13.2	10.6	t
[DEG]	0~85	0~85	0~85	0~85	0~85	0~85	0~85	0~85	0~85	0~85	0~85	0~85	0~85	0~85	0~85	0~85	0~85	0~85	0~85	[DEG]
	4	6	5	4	3	4	4	3	4	3	3	3	3	3	2	2	2	2	2	
	60t	60t	60t	60t	26t	60t	60t	26t	60t	26t	26t	26t	26t	26t	26t	26t	26t	26t	26t	

ブーム

MB		28.9 t	8.0m x 7.5m	0 °	JPN

m	12.8	m
2.5	120.4	2.5
3.0	107.8	3.0
3.5	97.5	3.5
4.0	88.9	4.0
4.5	81.5	4.5
5.0	75.2	5.0
6.0	65.0	6.0
7.0	57.0	7.0
8.0	50.6	8.0
9.0	45.4	9.0
10.0	39.3	10.0
11.0		11.0
12.0		12.0
14.0		14.0
16.0		16.0
18.0		18.0
20.0		20.0
22.0		22.0
24.0		24.0
26.0		26.0
28.0		28.0
30.0		30.0
32.0		32.0
34.0		34.0
36.0		36.0
38.0		38.0
40.0		40.0
42.0		42.0
44.0		44.0
46.0		46.0
48.0		48.0
50.0		50.0
52.0		52.0
54.0		54.0
56.0		56.0
1	0	1
2	0	2
3	0	3
4	0	4
5	0	5
ID	1	ID
t	31.9	t
[DEG]	0~85	[DEG]
	20	
	100t×2	

MB		28.9 t	8.0m x 7.5m	360 °	JPN

m	12.8	17.1	17.1	17.1	17.1	21.4	21.4	21.4	21.4	21.4	22.2	22.2	22.2	22.3	22.3	25.8	25.8	25.8	25.8	30.1	30.1	30.1	30.1	31.6	m
2.5	113.2																								2.5
3.0	102.5	90.0	90.0	88.0	46.6	90.0	85.7	57.2	46.6	35.3	54.0	38.6	31.8	70.1	84.3										3.0
3.5	93.6	90.0	90.0	84.0	45.2	90.0	80.3	53.4	46.6	33.0	50.5	35.5	29.4	65.5	80.6	70.0	50.0	46.6	34.8						3.5
4.0	86.1	85.9	86.3	79.0	42.8	86.1	75.6	50.1	46.0	31.0	47.4	33.0	27.3	61.4	75.6	70.0	50.0	46.6	33.0						4.0
4.5	79.4	79.1	79.7	74.5	40.7	79.5	71.4	47.1	44.0	29.3	44.6	30.7	25.5	57.9	71.2	70.0	50.0	45.7	31.1	54.3	50.0	42.4	26.7	32.0	4.5
5.0	73.2	72.9	73.5	70.6	38.8	73.3	67.6	44.5	42.1	27.7	42.1	28.7	23.9	54.7	67.4	70.0	50.0	44.0	29.4	51.3	50.0	42.4	25.6	30.4	5.0
6.0	62.8	62.4	63.1	63.7	35.5	62.8	61.2	40.1	38.5	25.0	37.9	25.4	21.2	49.3	60.7	63.6	50.0	41.0	26.5	46.1	50.0	42.4	23.3	26.8	6.0
7.0	53.9	53.6	54.3	54.8	32.8	54.0	55.0	36.5	35.1	22.7	34.5	22.8	19.0	44.8	53.1	54.7	46.6	37.3	24.1	41.8	49.3	39.6	21.2	24.0	7.0
8.0	47.0	46.6	47.3	47.8	30.5	47.0	48.0	33.4	32.3	20.9	31.2	20.6	17.3	41.1	46.1	47.7	43.2	34.3	22.1	38.2	46.0	36.7	19.4	21.7	8.0
9.0	41.4	40.9	41.6	42.2	28.5	41.4	42.4	30.8	29.9	19.2	28.5	18.8	15.8	37.9	40.5	42.1	40.2	31.7	20.4	35.2	43.0	34.2	17.8	19.7	9.0
10.0	36.7	36.3	37.0	37.5	26.9	36.7	37.7	28.6	27.8	17.6	26.2	17.2	14.5	34.9	35.8	37.4	37.7	29.5	19.0	32.6	38.3	32.0	16.5	18.1	10.0
11.0		32.4	33.1	33.7	25.4	32.8	33.8	26.7	26.0	16.3	24.3	15.9	13.5	32.3	31.9	33.5	34.8	27.6	17.7	30.3	34.4	30.0	15.3	16.6	11.0
12.0		28.2	29.0	29.6	24.2	28.7	29.8	25.0	24.5	15.1	22.5	14.8	12.5	29.1	27.6	29.5	31.0	25.9	16.6	28.3	30.5	28.3	14.2	15.4	12.0
14.0		21.5	22.3	22.9	22.5	22.0	23.1	22.3	21.9	13.2	19.7	12.9	11.0	22.4	21.0	22.8	24.2	23.0	14.8	22.4	23.7	25.0	12.3	13.4	14.0
16.0						17.5	18.5	18.8	19.9	11.8	17.5	11.5	9.8	17.8	16.5	18.2	19.5	20.4	13.3	17.8	19.0	20.3	10.9	11.8	16.0
18.0						14.2	15.2	15.4	16.7	10.6	15.5	10.3	8.9	14.5	13.2	14.8	16.1	17.0	12.1	14.4	15.6	16.8	9.7	10.5	18.0
20.0																12.2	13.4	14.4	11.1	11.8	13.0	14.2	8.7	9.4	20.0
22.0																10.2	11.4	12.3	10.4	9.8	10.9	12.1	7.9	8.5	22.0
24.0																				8.1	9.3	10.4	7.2	7.7	24.0
26.0																				6.8	7.9	9.0	6.7	7.1	26.0
28.0																								6.5	28.0
30.0																									30.0
32.0																									32.0
34.0																									34.0
36.0																									36.0
38.0																									38.0
40.0																									40.0
42.0																									42.0
44.0																									44.0
46.0																									46.0
48.0																									48.0
50.0																									50.0
52.0																									52.0
54.0																									54.0
56.0																									56.0
1	0	46	0	0	0	46	0	0	0	0	0	0	0	0	100	46	0	0	0	92	46	0	0	0	1
2	0	0	46	0	0	46	46	0	0	0	0	0	0	100	0	46	46	0	0	46	46	46	0	0	2
3	0	0	0	46	0	0	46	92	0	0	100	0	0	0	0	46	46	46	0	46	46	46	0	100	3
4	0	0	0	0	0	0	0	0	46	0	0	100	0	0	0	0	46	46	46	0	46	46	92	100	4
5	0	0	0	0	46	0	0	0	46	92	0	0	100	0	0	0	0	46	92	0	0	46	92	0	5
ID	1	68	71 (76)	64 (67)	2 (32)	76	65 (67)	74	25 (38)	3 (24)	75	60 (63)	4 (16)	73	70	66	53 (55)	33 (42)	17 (24)	67	54	39 (50)	18 (24)	63	ID
t	31.9	27.3	32.7	34.4	34.5	30.4	31.9	23.3	33.3	27.8	24.7	22.9	22.9	24.2	22.8	30.0	32.1	32.3	32.2	26.5	29.9	30.7	26.7	24.2	t
[DEG]	0~85	0~85	0~85	0~85	0~85	0~85	0~85	0~85	0~85	0~85	0~85	0~85	0~85	0~85	0~85	0~85	0~85	0~85	0~85	0~85	0~85	0~85	0~85	0~85	[DEG]
	20	11	11	11	6	11	11	7	6	5	7	5	4	9	11	9	6	6	5	7	6	6	4	4	
	100t×2	100t	100t	100t	60t	100t	100t	60t	60t	60t	60t	60t	60t	100t	100t	100t	60t	60t	60t	100t	60t	60t	60t	60t	

m	31.7	34.4	34.4	34.4	34.4	38.7	38.7	38.7	43.0	43.0	43.0	43.0	47.4	47.4	47.4	51.7	51.7	56.0	60.0						m
2.5																									2.5
3.0																									3.0
3.5																									3.5
4.0																									4.0
4.5																									4.5
5.0	30.0	44.0	38.0	29.5	25.2																				5.0
6.0	27.4	42.3	38.0	28.8	23.6	32.8	27.4	20.5																	6.0
7.0	25.0	38.4	38.0	26.8	22.1	32.8	27.0	20.5	27.1	23.1	20.7	19.0													7.0
8.0	22.9	35.2	38.0	24.9	20.5	32.8	25.7	20.1	27.1	23.1	20.6	19.0	21.4	18.6	15.7										8.0
9.0	21.2	32.4	35.8	23.3	19.1	30.3	24.5	18.5	27.1	23.1	19.6	18.6	21.4	18.6	15.7	16.6	14.3								9.0
10.0	19.6	30.0	33.7	21.9	17.8	28.1	23.2	17.2	26.2	23.1	18.7	17.8	21.4	18.6	15.7	16.6	14.3	13.2							10.0
11.0	18.3	27.9	31.8	20.6	16.6	26.2	21.9	16.0	24.7	22.3	17.9	16.9	21.4	18.6	15.7	16.6	14.3	13.2	10.6						11.0
12.0	17.2	26.0	30.1	19.5	15.6	24.5	20.8	14.9	23.1	21.4	17.1	15.8	21.3	18.4	15.7	16.6	14.3	13.2	10.6						12.0
14.0	15.3	23.0	24.5	17.5	14.0	21.6	18.8	13.2	20.4	19.6	15.7	14.1	19.2	16.7	14.7	16.6	14.3	13.2	10.6						14.0
16.0	13.7	18.5	19.8	16.0	12.5	19.3	17.2	11.8	18.2	18.0	14.4	12.7	17.4	15.2	13.3	15.6	13.6	13.2	10.6						16.0
18.0	12.5	15.1	16.4	14.7	11.2	16.0	15.9	10.6	15.9	16.6	13.2	11.5	15.7	13.9	12.1	14.5	12.6	12.6	10.6						18.0
20.0	11.4	12.5	13.8	13.6	10.2	13.3	14.4	9.6	13.3	14.0	12.2	10.5	13.6	12.8	11.1	13.5	11.6	11.9	10.5						20.0
22.0	10.6	10.4	11.7	12.6	9.3	11.2	12.3	8.8	11.2	11.8	11.3	9.7	11.5	11.8	10.3	11.9	10.8	11.2	9.7						22.0
24.0	9.8	8.8	10.0	11.0	8.5	9.5	10.5	8.0	9.5	10.1	10.6	8.9	9.8	10.5	9.4	10.2	10.0	10.4	9.0						24.0
26.0	8.9	7.4	8.6	9.6	7.9	8.1	9.1	7.3	8.1	8.7	9.5	8.3	8.4	9.1	8.6	8.8	9.4	9.1	8.2						26.0
28.0	7.7	6.3	7.4	8.4	7.3	7.0	8.0	6.8	7.0	7.6	8.3	7.6	7.2	7.9	7.9	7.6	8.3	7.9	7.5						28.0
30.0		5.4	6.5	7.5	6.8	6.0	7.0	6.2	6.0	6.6	7.3	7.1	6.2	6.9	7.3	6.6	7.3	6.9	6.9						30.0
32.0						5.2	6.2	5.8	5.2	5.7	6.5	6.6	5.4	6.1	6.7	5.8	6.5	6.1	6.1						32.0
34.0						4.5	5.4	5.4	4.5	5.0	5.7	6.2	4.7	5.3	6.0	5.0	5.7	5.4	5.4						34.0
36.0									3.8	4.4	5.1	5.5	4.0	4.7	5.3	4.4	5.1	4.7	4.7						36.0
38.0									3.3	3.8	4.5	5.0	3.5	4.1	4.7	3.8	4.5	4.1	4.2						38.0
40.0									2.8	3.3	4.0	4.5	3.0	3.6	4.2	3.3	4.0	3.6	3.6						40.0
42.0													2.5	3.2	3.8	2.8	3.5	3.2	3.2						42.0
44.0													2.1	2.8	3.4	2.4	3.1	2.8	2.8						44.0
46.0																2.0	2.8	2.4	2.4						46.0
48.0																1.7	2.4	2.0	2.0						48.0
50.0																		1.7	1.7						50.0
52.0																		1.4	1.4						52.0
54.0																			1.1						54.0
56.0																									56.0
1	0	92	46	0	0	92	46	0	92	92	46	0	92	46	0	92	46	92	100						1
2	100	46	46	46	0	46	46	0	92	46	46	46	92	92	92	92	92	92	100						2
3	0	46	46	46	46	46	46	92	46	46	46	92	92	92	92	92	92	92	100						3
4	0	46	46	46	92	46	46	92	46	46	92	92	46	92	92	92	92	92	100						4
5	100	0	46	92	92	46	92	92	46	92	92	92	46	46	92	46	92	92	100						5
ID	58	55	49	44 (46)	19(24)	50	45	20 (24)	42	46	48	21	38	31	22 (24)	32	23	24	16						ID
t	22.8	26.5	28.8	29.5	25.2	27.1	27.4	20.5	26.6	23.1	20.7	19.0	21.4	18.6	15.7	16.6	14.3	13.2	10.6						t
[DEG]	0~85	0~85	0~85	0~85	0~85	0~85	0~85	0~85	0~85	0~85	0~85	0~85	0~85	0~85	0~85	0~85	0~85	0~85	0~85						[DEG]
	4	6	5	4	3	4	4	3	4	3	3	3	3	3	2	2	2	2	2						
	60t	60t	60t	60t	26t	60t	60t	26t	60t	26t	26t	26t	26t	26t	26t	26t	26t	26t	26t						

ブーム

MB		28.9 t	8.0m x 6.2m	0 °	JPN

m	12.8	m
2.5	120.4	2.5
3.0	107.8	3.0
3.5	97.5	3.5
4.0	88.9	4.0
4.5	81.5	4.5
5.0	75.2	5.0
6.0	65.0	6.0
7.0	57.0	7.0
8.0	50.6	8.0
9.0	45.4	9.0
10.0	39.2	10.0
11.0		11.0
12.0		12.0
14.0		14.0
16.0		16.0
18.0		18.0
20.0		20.0
22.0		22.0
24.0		24.0
26.0		26.0
28.0		28.0
30.0		30.0
32.0		32.0
34.0		34.0
36.0		36.0
38.0		38.0
40.0		40.0
42.0		42.0
44.0		44.0
46.0		46.0
48.0		48.0
50.0		50.0
52.0		52.0
54.0		54.0
56.0		56.0
1	0	1
2	0	2
3	0	3
4	0	4
5	0	5
ID	1	ID
t	31.9	t
[DEG]	0~85	[DEG]
	20	
	100t×2	

MB		28.9 t	8.0m x 6.2m	360 °	JPN

m	12.8	17.1	17.1	17.1	17.1	21.4	21.4	21.4	21.4	21.4	22.2	22.2	22.2	22.3	22.3	25.8	25.8	25.8	25.8	30.1	30.1	30.1	30.1	31.6	m
2.5	111.4																								2.5
3.0	99.8	90.0	90.0	88.0	46.6	90.0	85.7	57.2	46.6	35.3	54.0	38.6	31.8	70.1	84.3										3.0
3.5	90.1	89.9	90.0	84.0	45.2	90.0	80.3	53.4	46.6	33.0	50.5	35.5	29.4	65.5	80.6	70.0	50.0	46.6	34.8						3.5
4.0	81.9	81.7	82.3	79.0	42.8	82.0	75.6	50.1	46.0	31.0	47.4	33.0	27.3	61.4	75.6	70.0	50.0	46.6	33.0						4.0
4.5	74.9	74.6	75.2	74.5	40.7	75.0	71.4	47.1	44.0	29.3	44.6	30.7	25.5	57.9	71.2	70.0	50.0	45.7	31.1	54.3	50.0	42.4	26.7	32.0	4.5
5.0	68.8	68.5	69.1	69.6	38.8	68.9	67.6	44.5	42.1	27.7	42.1	28.7	23.9	54.7	67.4	69.5	50.0	44.0	29.4	51.3	50.0	42.4	25.6	30.4	5.0
6.0	58.7	58.3	59.0	59.6	35.5	58.7	59.7	40.1	38.5	25.0	37.9	25.4	21.2	49.3	57.8	59.5	50.0	41.0	26.5	46.1	50.0	42.4	23.3	26.8	6.0
7.0	50.2	49.8	50.5	51.1	32.8	50.2	51.2	36.5	35.1	22.7	34.5	22.8	19.0	44.8	49.3	51.0	46.6	37.3	24.1	41.8	49.3	39.6	21.2	24.0	7.0
8.0	43.5	43.1	43.8	44.4	30.5	43.5	44.6	33.4	32.3	20.9	31.2	20.6	17.3	41.1	42.6	44.3	43.2	34.3	22.1	38.2	45.2	36.7	19.4	21.7	8.0
9.0	38.1	37.6	38.4	39.0	28.5	38.2	39.2	30.8	29.9	19.2	28.5	18.8	15.8	37.9	37.0	38.9	40.2	31.7	20.4	35.2	39.8	34.2	17.8	19.7	9.0
10.0	31.6	31.0	31.9	32.6	26.9	31.6	32.8	28.6	27.8	17.6	26.2	17.2	14.5	32.1	30.5	32.5	34.1	29.5	19.0	32.0	33.6	32.0	16.5	18.1	10.0
11.0		26.1	27.0	27.6	25.4	26.6	27.9	26.7	26.0	16.3	24.3	15.9	13.5	27.1	25.6	27.5	29.1	27.6	17.7	27.1	28.6	30.0	15.3	16.6	11.0
12.0		22.3	23.1	23.8	24.2	22.8	24.0	24.4	24.5	15.1	22.5	14.8	12.5	23.3	21.8	23.6	25.1	25.9	16.6	23.2	24.6	26.0	14.2	15.4	12.0
14.0		16.9	17.6	18.2	19.2	17.3	18.4	18.7	20.2	13.2	18.8	12.9	11.0	17.7	16.3	18.1	19.4	20.4	14.8	17.7	19.0	20.3	12.3	13.4	14.0
16.0						13.5	14.6	14.9	16.2	11.8	14.9	11.5	9.8	13.9	12.6	14.2	15.5	16.5	13.3	13.8	15.1	16.3	10.9	11.8	16.0
18.0						10.8	11.8	12.0	13.3	10.6	12.1	10.3	8.9	11.1	9.9	11.4	12.7	13.6	12.1	11.0	12.2	13.4	9.7	10.5	18.0
20.0																9.3	10.5	11.4	11.1	8.9	10.1	11.2	8.7	9.4	20.0
22.0																7.7	8.8	9.7	10.2	7.2	8.4	9.5	7.9	8.5	22.0
24.0																				5.9	7.0	8.1	7.2	7.7	24.0
26.0																				4.8	5.9	7.0	6.7	7.0	26.0
28.0																								6.0	28.0
30.0																									30.0
32.0																									32.0
34.0																									34.0
36.0																									36.0
38.0																									38.0
40.0																									40.0
42.0																									42.0
44.0																									44.0
46.0																									46.0
48.0																									48.0
50.0																									50.0
52.0																									52.0
54.0																									54.0
56.0																									56.0
% 1	0	46	0	0	0	46	0	0	0	0	0	0	0	0	100	46	0	0	0	92	46	0	0	0	1
% 2	0	0	46	0	0	46	46	0	0	0	0	0	0	100	0	46	46	0	0	46	46	46	0	0	2
% 3	0	0	0	46	0	0	46	92	0	0	100	0	0	0	0	46	46	46	0	46	46	46	0	100	3
% 4	0	0	0	0	0	0	0	0	46	0	0	100	0	0	0	0	46	46	46	0	46	46	92	100	4
% 5	0	0	0	0	46	0	0	0	46	92	0	0	100	0	0	0	0	46	92	0	0	46	92	0	5
ID	1	68	71 (76)	64 (67)	2 (32)	76	65 (67)	74	25 (38)	3 (24)	75	60 (63)	4 (16)	73	70	66	53 (55)	33 (42)	17 (24)	67	54	39 (50)	18 (24)	63	ID
t	31.9	27.3	32.7	34.4	34.5	30.4	31.9	23.3	33.3	27.8	24.7	22.9	22.9	24.2	22.8	30.0	32.1	32.3	32.2	26.5	29.9	30.7	26.7	24.2	t
[DEG]	0~85	0~85	0~85	0~85	0~85	0~85	0~85	0~85	0~85	0~85	0~85	0~85	0~85	0~85	0~85	0~85	0~85	0~85	0~85	0~85	0~85	0~85	0~85	0~85	[DEG]
	20	11	11	11	6	11	11	7	6	5	7	5	4	9	11	9	6	6	5	7	6	6	4	4	
	100t×2	100t	100t	100t	60t	100t	100t	60t	60t	60t	60t	60t	60t	100t	100t	100t	60t	60t	60t	100t	60t	60t	60t	60t	

m	31.7	34.4	34.4	34.4	34.4	38.7	38.7	38.7	43.0	43.0	43.0	43.0	47.4	47.4	47.4	51.7	51.7	56.0	60.0	m
2.5																				2.5
3.0																				3.0
3.5																				3.5
4.0																				4.0
4.5																				4.5
5.0	30.0	44.0	38.0	29.5	25.2															5.0
6.0	27.4	42.3	38.0	28.8	23.6	32.8	27.4	20.5												6.0
7.0	25.0	38.4	38.0	26.8	22.1	32.8	27.0	20.5	27.1	23.1	20.7	19.0								7.0
8.0	22.9	35.2	38.0	24.9	20.5	32.8	25.7	20.1	27.1	23.1	20.6	19.0	21.4	18.6	15.7					8.0
9.0	21.2	32.4	35.8	23.3	19.1	30.3	24.5	18.5	27.1	23.1	19.6	18.6	21.4	18.6	15.7	16.6	14.3			9.0
10.0	19.6	30.0	33.7	21.9	17.8	28.1	23.2	17.2	26.2	23.1	18.7	17.8	21.4	18.6	15.7	16.6	14.3	13.2		10.0
11.0	18.3	27.9	29.5	20.6	16.6	26.2	21.9	16.0	24.7	22.3	17.9	16.9	21.4	18.6	15.7	16.6	14.3	13.2	10.6	11.0
12.0	17.2	24.1	25.5	19.5	15.6	24.5	20.8	14.9	23.1	21.4	17.1	15.8	21.3	18.4	15.7	16.6	14.3	13.2	10.6	12.0
14.0	15.3	18.4	19.8	17.5	14.0	19.4	18.8	13.2	19.3	19.6	15.7	14.1	19.2	16.7	14.7	16.6	14.3	13.2	10.6	14.0
16.0	13.7	14.6	15.9	16.0	12.5	15.4	16.5	11.8	15.4	16.1	14.4	12.7	15.7	15.2	13.3	15.6	13.6	13.2	10.6	16.0
18.0	12.5	11.7	13.0	14.1	11.2	12.6	13.6	10.6	12.5	13.2	13.2	11.5	12.8	13.6	12.1	13.2	12.6	12.6	10.6	18.0
20.0	11.1	9.6	10.8	11.9	10.2	10.4	11.4	9.6	10.4	11.0	11.7	10.5	10.6	11.3	11.1	11.0	11.6	11.4	10.5	20.0
22.0	9.4	7.9	9.1	10.1	9.3	8.6	9.7	8.8	8.6	9.2	10.0	9.7	8.9	9.6	10.3	9.3	10.0	9.6	9.7	22.0
24.0	8.0	6.5	7.7	8.7	8.5	7.3	8.2	8.0	7.2	7.8	8.6	8.9	7.5	8.2	8.8	7.9	8.6	8.2	8.3	24.0
26.0	6.8	5.4	6.5	7.5	7.8	6.1	7.1	7.3	6.1	6.7	7.4	7.9	6.3	7.0	7.7	6.7	7.4	7.1	7.1	26.0
28.0	5.9	4.5	5.6	6.6	7.0	5.2	6.1	6.8	5.1	5.7	6.4	6.9	5.4	6.0	6.7	5.7	6.5	6.1	6.1	28.0
30.0		3.7	4.8	5.7	6.2	4.3	5.3	6.1	4.3	4.9	5.6	6.0	4.6	5.2	5.8	4.9	5.6	5.2	5.3	30.0
32.0						3.7	4.6	5.4	3.6	4.2	4.9	5.3	3.8	4.5	5.1	4.2	4.9	4.5	4.6	32.0
34.0						3.1	4.0	4.8	3.0	3.6	4.3	4.7	3.2	3.9	4.5	3.6	4.3	3.9	3.9	34.0
36.0									2.5	3.0	3.7	4.2	2.7	3.3	3.9	3.0	3.7	3.4	3.4	36.0
38.0									2.0	2.6	3.3	3.7	2.2	2.9	3.5	2.6	3.2	2.9	2.9	38.0
40.0									1.6	2.1	2.8	3.3	1.8	2.4	3.0	2.1	2.8	2.4	2.5	40.0
42.0													1.4	2.1	2.6	1.7	2.4	2.0	2.1	42.0
44.0													1.0	1.7	2.3	1.3	2.1	1.7	1.7	44.0
46.0																1.0	1.7	1.3	1.4	46.0
48.0																	1.4	1.0	1.0	48.0
50.0																				50.0
52.0																				52.0
54.0																				54.0
56.0																				56.0
% 1	0	92	46	0	0	92	46	0	92	92	46	0	92	46	0	92	46	92	100	1
% 2	100	46	46	46	0	46	46	0	92	46	46	46	92	92	92	92	92	92	100	2
% 3	0	46	46	46	46	46	46	92	46	46	46	92	92	92	92	92	92	92	100	3
% 4	0	46	46	46	92	46	46	92	46	46	92	92	46	92	92	92	92	92	100	4
% 5	100	0	46	92	92	46	92	92	46	92	92	92	46	46	92	46	92	92	100	5
ID	58	55	49	44 (46)	19(24)	50	45	20 (24)	42	46	48	21	38	31	22 (24)	32	23	24	16	ID
t	22.8	26.5	28.8	29.5	25.2	27.1	27.4	20.5	26.6	23.1	20.7	19.0	21.4	18.6	15.7	16.6	14.3	13.2	10.6	t
[DEG]	0~85	0~85	0~85	0~85	0~85	0~85	0~85	0~85	0~85	0~85	0~85	0~85	0~85	0~85	0~85	0~85	0~85	0~85	33~85	[DEG]
	4	6	5	4	3	4	4	3	4	3	3	3	3	3	2	2	2	2	2	
	60t	60t	60t	60t	26t	60t	60t	26t	60t	26t	26t	26t	26t	26t	26t	26t	26t	26t	26t	

ブーム

MB		28.9 t	8.0m x 5.0m	0 °	JPN

m	12.8																								m
2.5	120.4																								2.5
3.0	107.8																								3.0
3.5	97.5																								3.5
4.0	88.9																								4.0
4.5	81.5																								4.5
5.0	75.2																								5.0
6.0	65.0																								6.0
7.0	57.0																								7.0
8.0	50.6																								8.0
9.0	45.4																								9.0
10.0	39.2																								10.0
11.0																									11.0
12.0																									12.0
14.0																									14.0
16.0																									16.0
18.0																									18.0
20.0																									20.0
22.0																									22.0
24.0																									24.0
26.0																									26.0
28.0																									28.0
30.0																									30.0
32.0																									32.0
34.0																									34.0
36.0																									36.0
38.0																									38.0
40.0																									40.0
42.0																									42.0
44.0																									44.0
46.0																									46.0
48.0																									48.0
50.0																									50.0
52.0																									52.0
54.0																									54.0
56.0																									56.0
1	0																								1
2	0																								2
3	0																								3
4	0																								4
5	0																								5
ID	1																								ID
t	31.9																								t
[DEG]	0~85																								[DEG]
	20																								
	100t×2																								

MB		28.9 t	8.0m x 5.0m	360 °	JPN

m	12.8	17.1	17.1	17.1	17.1	21.4	21.4	21.4	21.4	21.4	22.2	22.2	22.2	22.3	22.3	25.8	25.8	25.8	25.8	30.1	30.1	30.1	30.1	31.6	m
2.5	106.1																								2.5
3.0	94.4	90.0	90.0	88.0	46.6	90.0	85.7	57.2	46.6	35.3	54.0	38.6	31.8	70.1	84.3										3.0
3.5	84.7	84.4	85.0	84.0	45.2	84.8	80.3	53.4	46.6	33.0	50.5	35.5	29.4	65.5	80.6	70.0	50.0	46.6	34.8						3.5
4.0	76.6	76.3	76.9	77.4	42.8	76.6	75.6	50.1	46.0	31.0	47.4	33.0	27.3	61.4	75.6	70.0	50.0	46.6	33.0						4.0
4.5	69.6	69.4	70.0	70.5	40.7	69.7	70.6	47.1	44.0	29.3	44.6	30.7	25.5	57.9	68.9	70.0	50.0	45.7	31.1	54.3	50.0	42.4	26.7	32.0	4.5
5.0	63.7	63.4	64.1	64.6	38.8	63.8	64.7	44.5	42.1	27.7	42.1	28.7	23.9	54.7	63.0	64.5	50.0	44.0	29.4	51.3	50.0	42.4	25.6	30.4	5.0
6.0	53.9	53.5	54.2	54.8	35.5	54.0	55.0	40.1	38.5	25.0	37.9	25.4	21.2	49.3	53.0	54.7	50.0	41.0	26.5	46.1	50.0	42.4	23.3	26.8	6.0
7.0	44.8	44.3	45.3	46.1	32.8	44.9	46.3	36.5	35.1	22.7	34.5	22.8	19.0	44.8	43.6	45.9	46.6	37.3	24.1	41.8	47.2	39.6	21.2	24.0	7.0
8.0	35.3	34.8	35.7	36.5	30.5	35.4	36.7	33.4	32.3	20.9	31.2	20.6	17.3	35.9	34.2	36.3	38.0	34.3	22.1	35.9	37.5	36.7	19.4	21.7	8.0
9.0	28.8	28.3	29.1	29.8	28.5	28.8	30.0	30.5	29.9	19.2	28.5	18.8	15.8	29.3	27.7	29.7	31.3	31.7	20.4	29.3	30.8	32.2	17.8	19.7	9.0
10.0	24.0	23.5	24.3	24.9	26.1	24.0	25.1	25.6	27.1	17.6	25.6	17.2	14.5	24.4	22.9	24.8	26.3	27.4	19.0	24.4	25.8	27.2	16.5	18.1	10.0
11.0		19.8	20.6	21.2	22.3	20.3	21.4	21.8	23.3	16.3	21.8	15.9	13.5	20.7	19.3	21.1	22.5	23.6	17.7	20.7	22.1	23.4	15.3	16.6	11.0
12.0		16.9	17.7	18.3	19.3	17.4	18.5	18.8	20.2	15.1	18.9	14.8	12.5	17.8	16.4	18.1	19.5	20.5	16.6	17.8	19.1	20.4	14.2	15.4	12.0
14.0		12.7	13.4	14.0	14.9	13.1	14.1	14.4	15.8	13.2	14.5	12.9	11.0	13.5	12.2	13.8	15.1	16.1	14.8	13.4	14.7	15.9	12.3	13.4	14.0
16.0						10.1	11.1	11.4	12.7	11.8	11.4	11.5	9.8	10.4	9.2	10.8	12.0	12.9	13.3	10.4	11.6	12.8	10.9	11.8	16.0
18.0						7.9	8.9	9.1	10.4	10.4	9.2	9.9	8.9	8.2	7.0	8.5	9.7	10.6	11.2	8.1	9.3	10.4	9.7	10.5	18.0
20.0																6.8	7.9	8.8	9.4	6.4	7.5	8.7	8.7	8.7	20.0
22.0																5.5	6.6	7.4	7.9	5.1	6.2	7.2	7.9	7.3	22.0
24.0																				4.0	5.0	6.1	6.9	6.2	24.0
26.0																				3.1	4.1	5.2	6.0	5.2	26.0
28.0																								4.4	28.0
30.0																									30.0
32.0																									32.0
34.0																									34.0
36.0																									36.0
38.0																									38.0
40.0																									40.0
42.0																									42.0
44.0																									44.0
46.0																									46.0
48.0																									48.0
50.0																									50.0
52.0																									52.0
54.0																									54.0
56.0																									56.0
1	0	46	0	0	0	46	0	0	0	0	0	0	0	0	100	46	0	0	0	92	46	0	0	0	1
2	0	0	46	0	0	46	46	0	0	0	0	0	0	100	0	46	46	0	0	46	46	46	0	0	2
3	0	0	0	46	0	0	46	92	0	0	100	0	0	0	0	46	46	46	0	46	46	46	0	100	3
4	0	0	0	0	0	0	0	0	46	0	0	100	0	0	0	0	46	46	46	0	46	46	92	100	4
5	0	0	0	0	46	0	0	0	46	92	0	0	100	0	0	0	0	46	92	0	0	46	92	0	5
ID	1	68	71 (76)	64 (67)	2 (32)	76	65 (67)	74	25 (38)	3 (24)	75	60 (63)	4 (16)	73	70	66	53 (55)	33 (42)	17 (24)	67	54	39 (50)	18 (24)	63	ID
t	31.9	27.3	32.7	34.4	34.5	30.4	31.9	23.3	33.3	27.8	24.7	22.9	22.9	24.2	22.8	30.0	32.1	32.3	32.2	26.5	29.9	30.7	26.7	24.2	t
[DEG]	0~85	0~85	0~85	0~85	0~85	0~85	0~85	0~85	0~85	0~85	0~85	0~85	0~85	0~85	0~85	0~85	0~85	0~85	0~85	0~85	0~85	0~85	0~85	0~85	[DEG]
	20	11	11	11	6	11	11	7	6	5	7	5	4	9	11	9	6	6	5	7	6	6	4	4	
	100t×2	100t	100t	100t	60t	100t	100t	60t	60t	60t	60t	60t	60t	100t	100t	100t	60t	60t	60t	100t	60t	60t	60t	60t	

m	31.7	34.4	34.4	34.4	34.4	38.7	38.7	38.7	43.0	43.0	43.0	43.0	47.4	47.4	47.4	51.7	51.7	56.0	60.0	m
2.5																				2.5
3.0																				3.0
3.5																				3.5
4.0																				4.0
4.5																				4.5
5.0	30.0	44.0	38.0	29.5	25.2															5.0
6.0	27.4	42.3	38.0	28.8	23.6	32.8	27.4	20.5												6.0
7.0	25.0	38.4	38.0	26.8	22.1	32.8	27.0	20.5	27.1	23.1	20.7	19.0								7.0
8.0	22.9	35.2	38.0	24.9	20.5	32.8	25.7	20.1	27.1	23.1	20.6	19.0	21.4	18.6	15.7					8.0
9.0	21.2	30.2	31.7	23.3	19.1	30.3	24.5	18.5	27.1	23.1	19.6	18.6	21.4	18.6	15.7	16.6	14.3			9.0
10.0	19.6	25.3	26.7	21.9	17.8	26.2	23.2	17.2	26.2	23.1	18.7	17.8	21.4	18.6	15.7	16.6	14.3	13.2		10.0
11.0	18.3	21.5	22.9	20.6	16.6	22.4	21.9	16.0	22.4	22.3	17.9	16.9	21.4	18.6	15.7	16.6	14.3	13.2	10.6	11.0
12.0	17.2	18.5	19.9	19.5	15.6	19.5	20.6	14.9	19.4	20.1	17.1	15.8	19.8	18.4	15.7	16.6	14.3	13.2	10.6	12.0
14.0	15.3	14.2	15.5	16.6	14.0	15.0	16.1	13.2	15.0	15.7	15.7	14.1	15.3	16.1	14.7	15.8	14.3	13.2	10.6	14.0
16.0	12.7	11.1	12.4	13.4	12.5	11.9	13.0	11.8	11.9	12.5	13.3	12.7	12.2	12.9	13.3	12.6	13.4	13.0	10.6	16.0
18.0	10.3	8.8	10.0	11.1	11.2	9.6	10.6	10.6	9.6	10.2	11.0	11.5	9.9	10.6	11.3	10.3	11.0	10.6	10.6	18.0
20.0	8.5	7.1	8.3	9.3	9.8	7.8	8.8	9.6	7.8	8.4	9.2	9.6	8.1	8.8	9.5	8.5	9.2	8.8	8.9	20.0
22.0	7.1	5.7	6.8	7.8	8.4	6.4	7.4	8.2	6.4	7.0	7.7	8.2	6.7	7.3	8.0	7.0	7.8	7.4	7.4	22.0
24.0	6.0	4.6	5.7	6.7	7.2	5.3	6.2	7.1	5.3	5.8	6.6	7.0	5.5	6.2	6.8	5.9	6.6	6.2	6.3	24.0
26.0	5.0	3.6	4.8	5.7	6.2	4.3	5.3	6.1	4.3	4.9	5.6	6.0	4.6	5.2	5.9	4.9	5.6	5.3	5.3	26.0
28.0	4.2	2.9	4.0	4.9	5.4	3.5	4.5	5.3	3.5	4.1	4.8	5.2	3.8	4.4	5.0	4.1	4.8	4.4	4.5	28.0
30.0		2.2	3.3	4.2	4.7	2.9	3.8	4.6	2.8	3.4	4.1	4.5	3.1	3.7	4.3	3.4	4.1	3.7	3.8	30.0
32.0						2.3	3.2	4.0	2.3	2.8	3.5	3.9	2.5	3.1	3.7	2.8	3.5	3.1	3.2	32.0
34.0						1.8	2.7	3.5	1.7	2.3	3.0	3.4	2.0	2.6	3.2	2.3	3.0	2.6	2.6	34.0
36.0									1.3	1.8	2.5	2.9	1.5	2.1	2.7	1.8	2.5	2.2	2.2	36.0
38.0										1.4	2.1	2.5	1.0	1.7	2.3	1.4	2.1	1.8	1.8	38.0
40.0										1.0	1.8	2.2		1.4	2.0	1.0	1.7	1.4	1.4	40.0
42.0														1.0	1.6		1.4	1.0	1.0	42.0
44.0															1.3		1.1			44.0
46.0																				46.0
48.0																				48.0
50.0																				50.0
52.0																				52.0
54.0																				54.0
56.0																				56.0
1	0	92	46	0	0	92	46	0	92	92	46	0	92	46	0	92	46	92	100	1
2	100	46	46	46	0	46	46	0	92	46	46	46	92	92	92	92	92	92	100	2
3	0	46	46	46	46	46	46	92	46	46	46	92	92	92	92	92	92	92	100	3
4	0	46	46	46	92	46	46	92	46	46	92	92	46	92	92	92	92	92	100	4
5	100	0	46	92	92	46	92	92	46	92	92	92	46	46	92	46	92	92	100	5
ID	58	55	49	44 (46)	19(24)	50	45	20 (24)	42	46	48	21	38	31	22 (24)	32	23	24	16	ID
t	22.8	26.5	28.8	29.5	25.2	27.1	27.4	20.5	26.6	23.1	20.7	19.0	21.4	18.6	15.7	16.6	14.3	13.2	10.6	t
[DEG]	0~85	0~85	0~85	0~85	0~85	0~85	0~85	0~85	0~85	0~85	0~85	0~85	30~85	0~85	0~85	25~85	0~85	30~85	37~85	[DEG]
	4	6	5	4	3	4	4	3	4	3	3	3	3	3	2	2	2	2	2	
	60t	60t	60t	60t	26t	60t	60t	26t	60t	26t	26t	26t	26t	26t	26t	26t	26t	26t	26t	

ブーム

MB		25.4 t	8.0m x 7.5m	0 °	JPN

m	12.8																								m
2.5	119.7																								2.5
3.0	107.2																								3.0
3.5	96.9																								3.5
4.0	88.3																								4.0
4.5	81.0																								4.5
5.0	74.7																								5.0
6.0	64.6																								6.0
7.0	56.6																								7.0
8.0	50.3																								8.0
9.0	44.2																								9.0
10.0	36.6																								10.0
11.0																									11.0
12.0																									12.0
14.0																									14.0
16.0																									16.0
18.0																									18.0
20.0																									20.0
22.0																									22.0
24.0																									24.0
26.0																									26.0
28.0																									28.0
30.0																									30.0
32.0																									32.0
34.0																									34.0
36.0																									36.0
38.0																									38.0
40.0																									40.0
42.0																									42.0
44.0																									44.0
46.0																									46.0
48.0																									48.0
50.0																									50.0
52.0																									52.0
54.0																									54.0
56.0																									56.0
1	0																								1
2	0																								2
3	0																								3
4	0																								4
5	0																								5
ID	1																								ID
t	31.9																								t
[DEG]	0~85																								[DEG]
	20																								
	100t×2																								

MB		25.4 t	8.0m x 7.5m	360 °	JPN

m	12.8	17.1	17.1	17.1	17.1	21.4	21.4	21.4	21.4	21.4	22.2	22.2	22.2	22.3	22.3	25.8	25.8	25.8	25.8	30.1	30.1	30.1	30.1	31.6	m
2.5	112.8																								2.5
3.0	102.2	90.0	90.0	88.0	46.6	90.0	85.7	57.2	46.6	35.3	54.0	38.6	31.8	70.1	84.3										3.0
3.5	93.4	90.0	90.0	84.0	45.2	90.0	80.3	53.4	46.6	33.0	50.5	35.5	29.4	65.5	80.6	70.0	50.0	46.6	34.8						3.5
4.0	85.8	85.6	86.0	79.0	42.8	85.9	75.6	50.1	46.0	31.0	47.4	33.0	27.3	61.4	75.6	70.0	50.0	46.6	33.0						4.0
4.5	78.8	78.5	79.1	74.5	40.7	78.9	71.4	47.1	44.0	29.3	44.6	30.7	25.5	57.9	71.2	70.0	50.0	45.7	31.1	54.3	50.0	42.4	26.7	32.0	4.5
5.0	72.6	72.3	72.9	70.6	38.8	72.7	67.6	44.5	42.1	27.7	42.1	28.7	23.9	54.7	67.4	70.0	50.0	44.0	29.4	51.3	50.0	42.4	25.6	30.4	5.0
6.0	61.8	61.4	62.1	62.7	35.5	61.8	61.2	40.1	38.5	25.0	37.9	25.4	21.2	49.3	60.7	62.6	50.0	41.0	26.5	46.1	50.0	42.4	23.3	26.8	6.0
7.0	53.0	52.6	53.3	53.9	32.8	53.1	54.1	36.5	35.1	22.7	34.5	22.8	19.0	44.8	52.2	53.8	46.6	37.3	24.1	41.8	49.3	39.6	21.2	24.0	7.0
8.0	46.1	45.7	46.4	47.0	30.5	46.1	47.1	33.4	32.3	20.9	31.2	20.6	17.3	41.1	45.2	46.9	43.2	34.3	22.1	38.2	46.0	36.7	19.4	21.7	8.0
9.0	40.5	40.1	40.8	41.4	28.5	40.5	41.5	30.8	29.9	19.2	28.5	18.8	15.8	37.9	39.6	41.3	40.2	31.7	20.4	35.2	42.1	34.2	17.8	19.7	9.0
10.0	35.9	35.5	36.2	36.8	26.9	35.9	36.9	28.6	27.8	17.6	26.2	17.2	14.5	34.9	35.0	36.6	37.7	29.5	19.0	32.6	37.5	32.0	16.5	18.1	10.0
11.0		30.5	31.3	32.0	25.4	31.0	32.2	26.7	26.0	16.3	24.3	15.9	13.5	31.4	29.9	31.9	33.4	27.6	17.7	30.3	32.9	30.0	15.3	16.6	11.0
12.0		26.1	26.9	27.6	24.2	26.6	27.8	25.0	24.5	15.1	22.5	14.8	12.5	27.1	25.6	27.5	29.0	25.9	16.6	27.1	28.5	28.3	14.2	15.4	12.0
14.0		19.9	20.7	21.3	22.2	20.4	21.5	21.8	21.9	13.2	19.7	12.9	11.0	20.8	19.4	21.1	22.5	23.0	14.8	20.7	22.1	23.3	12.3	13.4	14.0
16.0						16.0	17.1	17.4	18.8	11.8	17.5	11.5	9.8	16.4	15.1	16.8	18.1	19.0	13.3	16.4	17.6	18.9	10.9	11.8	16.0
18.0						12.8	13.9	14.1	15.5	10.6	14.2	10.3	8.9	13.1	11.9	13.5	14.8	15.7	12.1	13.1	14.3	15.6	9.7	10.5	18.0
20.0																11.0	12.3	13.2	11.1	10.6	11.8	13.0	8.7	9.4	20.0
22.0																9.1	10.3	11.2	10.4	8.7	9.9	11.0	7.9	8.5	22.0
24.0																				7.2	8.3	9.4	7.2	7.7	24.0
26.0																				5.9	7.0	8.2	6.7	7.1	26.0
28.0																								6.5	28.0
30.0																									30.0
32.0																									32.0
34.0																									34.0
36.0																									36.0
38.0																									38.0
40.0																									40.0
42.0																									42.0
44.0																									44.0
46.0																									46.0
48.0																									48.0
50.0																									50.0
52.0																									52.0
54.0																									54.0
56.0																									56.0
1	0	46	0	0	0	46	0	0	0	0	0	0	0	0	100	46	0	0	0	92	46	0	0	0	1
2	0	0	46	0	0	46	46	0	0	0	0	0	0	100	0	46	46	0	0	46	46	46	0	0	2
3	0	0	0	46	0	0	46	92	0	0	100	0	0	0	0	46	46	46	0	46	46	46	0	100	3
4	0	0	0	0	0	0	0	0	46	0	0	100	0	0	0	0	46	46	46	0	46	46	92	100	4
5	0	0	0	0	46	0	0	0	46	92	0	0	100	0	0	0	0	46	92	0	0	46	92	0	5
ID	1	68	71 (76)	64 (67)	2 (32)	76	65 (67)	74	25 (38)	3 (24)	75	60 (63)	4 (16)	73	70	66	53 (55)	33 (42)	17 (24)	67	54	39 (50)	18 (24)	63	ID
t	31.9	27.3	32.7	34.4	34.5	30.4	31.9	23.3	33.3	27.8	24.7	22.9	22.9	24.2	22.8	30.0	32.1	32.3	32.2	26.5	29.9	30.7	26.7	24.2	t
[DEG]	0~85	0~85	0~85	0~85	0~85	0~85	0~85	0~85	0~85	0~85	0~85	0~85	0~85	0~85	0~85	0~85	0~85	0~85	0~85	0~85	0~85	0~85	0~85	0~85	[DEG]
	20	11	11	11	6	11	11	7	6	5	7	5	4	9	11	9	6	6	5	7	6	6	4	4	
	100t×2	100t	100t	100t	60t	100t	100t	60t	60t	60t	60t	60t	60t	100t	100t	100t	60t	60t	60t	100t	60t	60t	60t	60t	

m	31.7	34.4	34.4	34.4	34.4	38.7	38.7	38.7	43.0	43.0	43.0	43.0	47.4	47.4	47.4	51.7	51.7	56.0	60.0	m
2.5																				2.5
3.0																				3.0
3.5																				3.5
4.0																				4.0
4.5																				4.5
5.0	30.0	44.0	38.0	29.5	25.2															5.0
6.0	27.4	42.3	38.0	28.8	23.6	32.8	27.4	20.5												6.0
7.0	25.0	38.4	38.0	26.8	22.1	32.8	27.0	20.5	27.1	23.1	20.7	19.0								7.0
8.0	22.9	35.2	38.0	24.9	20.5	32.8	25.7	20.1	27.1	23.1	20.6	19.0	21.4	18.6	15.7					8.0
9.0	21.2	32.4	35.8	23.3	19.1	30.3	24.5	18.5	27.1	23.1	19.6	18.6	21.4	18.6	15.7	16.6	14.3			9.0
10.0	19.6	30.0	33.7	21.9	17.8	28.1	23.2	17.2	26.2	23.1	18.7	17.8	21.4	18.6	15.7	16.6	14.3	13.2		10.0
11.0	18.3	27.9	31.8	20.6	16.6	26.2	21.9	16.0	24.7	22.3	17.9	16.9	21.4	18.6	15.7	16.6	14.3	13.2	10.6	11.0
12.0	17.2	26.0	29.4	19.5	15.6	24.5	20.8	14.9	23.1	21.4	17.1	15.8	21.3	18.4	15.7	16.6	14.3	13.2	10.6	12.0
14.0	15.3	21.5	22.9	17.5	14.0	21.6	18.8	13.2	20.4	19.6	15.7	14.1	19.2	16.7	14.7	16.6	14.3	13.2	10.6	14.0
16.0	13.7	17.1	18.4	16.0	12.5	18.0	17.2	11.8	18.0	18.0	14.4	12.7	17.4	15.2	13.3	15.6	13.6	13.2	10.6	16.0
18.0	12.5	13.8	15.1	14.7	11.2	14.7	15.8	10.6	14.7	15.3	13.2	11.5	15.0	13.9	12.1	14.5	12.6	12.6	10.6	18.0
20.0	11.4	11.3	12.6	13.6	10.2	12.1	13.2	9.6	12.1	12.8	12.2	10.5	12.4	12.8	11.1	12.8	11.6	11.9	10.5	20.0
22.0	10.6	9.4	10.6	11.7	9.3	10.2	11.2	8.8	10.1	10.8	11.3	9.7	10.4	11.1	10.3	10.8	10.8	11.2	9.7	22.0
24.0	9.3	7.8	9.0	10.1	8.5	8.6	9.6	8.0	8.6	9.2	9.9	8.9	8.8	9.5	9.4	9.2	10.0	9.6	9.0	24.0
26.0	8.0	6.5	7.7	8.7	7.9	7.3	8.3	7.3	7.3	7.9	8.6	8.3	7.5	8.2	8.6	7.9	8.6	8.3	8.2	26.0
28.0	6.9	5.5	6.6	7.6	7.3	6.2	7.2	6.8	6.2	6.8	7.5	7.6	6.4	7.1	7.8	6.8	7.5	7.1	7.2	28.0
30.0		4.6	5.8	6.7	6.8	5.3	6.3	6.2	5.3	5.8	6.6	7.0	5.5	6.2	6.8	5.9	6.6	6.2	6.2	30.0
32.0						4.5	5.5	5.8	4.5	5.0	5.8	6.2	4.7	5.4	6.0	5.1	5.8	5.4	5.4	32.0
34.0						3.9	4.8	5.4	3.8	4.4	5.1	5.5	4.0	4.7	5.3	4.4	5.1	4.7	4.7	34.0
36.0									3.2	3.8	4.5	4.9	3.4	4.1	4.7	3.8	4.5	4.1	4.1	36.0
38.0									2.7	3.2	4.0	4.4	2.9	3.6	4.2	3.2	3.9	3.6	3.6	38.0
40.0									2.2	2.8	3.5	3.9	2.4	3.1	3.7	2.8	3.5	3.1	3.1	40.0
42.0													2.0	2.7	3.3	2.3	3.0	2.7	2.7	42.0
44.0													1.6	2.3	2.9	1.9	2.7	2.3	2.3	44.0
46.0																1.5	2.3	1.9	1.9	46.0
48.0																1.2	2.0	1.6	1.6	48.0
50.0																		1.3	1.3	50.0
52.0																		1.0	1.0	52.0
54.0																				54.0
56.0																				56.0
1	0	92	46	0	0	92	46	0	92	92	46	0	92	46	0	92	46	92	100	1
2	100	46	46	46	0	46	46	0	92	46	46	46	92	92	92	92	92	92	100	2
3	0	46	46	46	46	46	46	92	46	46	46	92	92	92	92	92	92	92	100	3
4	0	46	46	46	92	46	46	92	46	46	92	92	46	92	92	92	92	92	100	4
5	100	0	46	92	92	46	92	92	46	92	92	92	46	46	92	46	92	92	100	5
ID	58	55	49	44 (46)	19(24)	50	45	20 (24)	42	46	48	21	38	31	22 (24)	32	23	24	16	ID
t	22.8	26.5	28.8	29.5	25.2	27.1	27.4	20.5	26.6	23.1	20.7	19.0	21.4	18.6	15.7	16.6	14.3	13.2	10.6	t
[DEG]	0~85	0~85	0~85	0~85	0~85	0~85	0~85	0~85	0~85	0~85	0~85	0~85	0~85	0~85	0~85	0~85	0~85	0~85	0~85	[DEG]
	4	6	5	4	3	4	4	3	4	3	3	3	3	3	2	2	2	2	2	
	60t	60t	60t	60t	26t	60t	60t	26t	60t	26t	26t	26t	26t	26t	26t	26t	26t	26t	26t	

ブーム

MB		25.4t	8.0m x 6.2m	0 °	JPN

m	12.8																								m
2.5	119.7																								2.5
3.0	107.2																								3.0
3.5	96.9																								3.5
4.0	88.3																								4.0
4.5	81.0																								4.5
5.0	74.7																								5.0
6.0	64.6																								6.0
7.0	56.6																								7.0
8.0	50.3																								8.0
9.0	44.2																								9.0
10.0	36.6																								10.0
11.0																									11.0
12.0																									12.0
14.0																									14.0
16.0																									16.0
18.0																									18.0
20.0																									20.0
22.0																									22.0
24.0																									24.0
26.0																									26.0
28.0																									28.0
30.0																									30.0
32.0																									32.0
34.0																									34.0
36.0																									36.0
38.0																									38.0
40.0																									40.0
42.0																									42.0
44.0																									44.0
46.0																									46.0
48.0																									48.0
50.0																									50.0
52.0																									52.0
54.0																									54.0
56.0																									56.0
1	0																								1
2	0																								2
3	0																								3
4	0																								4
5	0																								5
ID	1																								ID
t	31.9																								t
[DEG]	0~85																								[DEG]
	20																								
	100t×2																								

MB		25.4 t	8.0m x 6.2m	360 °	JPN

m	12.8	17.1	17.1	17.1	17.1	21.4	21.4	21.4	21.4	21.4	22.2	22.2	22.2	22.3	22.3	25.8	25.8	25.8	25.8	30.1	30.1	30.1	30.1	31.6	m
2.5	110.6																								2.5
3.0	99.1	90.0	90.0	88.0	46.6	90.0	85.7	57.2	46.6	35.3	54.0	38.6	31.8	70.1	84.3										3.0
3.5	89.4	89.1	89.7	84.0	45.2	89.5	80.3	53.4	46.6	33.0	50.5	35.5	29.4	65.5	80.6	70.0	50.0	46.6	34.8						3.5
4.0	81.2	80.9	81.5	79.0	42.8	81.3	75.6	50.1	46.0	31.0	47.4	33.0	27.3	61.4	75.6	70.0	50.0	46.6	33.0						4.0
4.5	74.2	73.9	74.5	74.5	40.7	74.2	71.4	47.1	44.0	29.3	44.6	30.7	25.5	57.9	71.2	70.0	50.0	45.7	31.1	54.3	50.0	42.4	26.7	32.0	4.5
5.0	68.1	67.8	68.4	68.9	38.8	68.2	67.6	44.5	42.1	27.7	42.1	28.7	23.9	54.7	67.4	68.8	50.0	44.0	29.4	51.3	50.0	42.4	25.6	30.4	5.0
6.0	57.5	57.2	57.9	58.5	35.5	57.6	58.6	40.1	38.5	25.0	37.9	25.4	21.2	49.3	56.7	58.4	50.0	41.0	26.5	46.1	50.0	42.4	23.3	26.8	6.0
7.0	49.1	48.8	49.5	50.0	32.8	49.2	50.2	36.5	35.1	22.7	34.5	22.8	19.0	44.8	48.3	49.9	46.6	37.3	24.1	41.8	49.3	39.6	21.2	24.0	7.0
8.0	42.5	42.1	42.8	43.4	30.5	42.6	43.6	33.4	32.3	20.9	31.2	20.6	17.3	41.1	41.7	43.3	43.2	34.3	22.1	38.2	44.2	36.7	19.4	21.7	8.0
9.0	35.2	34.6	35.6	36.3	28.5	35.2	36.6	30.8	29.9	19.2	28.5	18.8	15.8	35.7	34.0	36.2	37.9	31.7	20.4	35.2	37.4	34.2	17.8	19.7	9.0
10.0	29.1	28.5	29.4	30.1	26.9	29.0	30.3	28.6	27.8	17.6	26.2	17.2	14.5	29.5	27.9	29.9	31.6	29.5	19.0	29.5	31.1	32.0	16.5	18.1	10.0
11.0		23.9	24.8	25.4	25.4	24.4	25.6	26.0	26.0	16.3	24.3	15.9	13.5	24.9	23.4	25.3	26.8	27.6	17.7	24.9	26.3	27.8	15.3	16.6	11.0
12.0		20.4	21.2	21.8	22.9	20.9	22.0	22.4	23.9	15.1	22.5	14.8	12.5	21.3	19.8	21.7	23.2	24.2	16.6	21.3	22.7	24.0	14.2	15.4	12.0
14.0		15.2	16.0	16.6	17.6	15.7	16.8	17.1	18.5	13.2	17.2	12.9	11.0	16.1	14.7	16.5	17.8	18.8	14.8	16.1	17.4	18.7	12.3	13.4	14.0
16.0						12.2	13.2	13.5	14.8	11.8	13.5	11.5	9.8	12.5	11.2	12.9	14.2	15.1	13.3	12.5	13.7	14.9	10.9	11.8	16.0
18.0						9.6	10.6	10.9	12.2	10.6	10.9	10.3	8.9	9.9	8.7	10.2	11.5	12.4	12.1	9.9	11.1	12.2	9.7	10.5	18.0
20.0																8.3	9.4	10.3	10.9	7.9	9.0	10.2	8.7	9.4	20.0
22.0																6.7	7.9	8.7	9.3	6.3	7.4	8.6	7.9	8.5	22.0
24.0																				5.1	6.2	7.3	7.2	7.3	24.0
26.0																				4.0	5.1	6.2	6.7	6.2	26.0
28.0																								5.3	28.0
30.0																									30.0
32.0																									32.0
34.0																									34.0
36.0																									36.0
38.0																									38.0
40.0																									40.0
42.0																									42.0
44.0																									44.0
46.0																									46.0
48.0																									48.0
50.0																									50.0
52.0																									52.0
54.0																									54.0
56.0																									56.0
1	0	46	0	0	0	46	0	0	0	0	0	0	0	0	100	46	0	0	0	92	46	0	0	0	1
2	0	0	46	0	0	46	46	0	0	0	0	0	0	100	0	46	46	0	0	46	46	46	0	0	2
3	0	0	0	46	0	0	46	92	0	0	100	0	0	0	0	46	46	46	0	46	46	46	0	100	3
4	0	0	0	0	0	0	0	0	46	0	0	100	0	0	0	0	46	46	46	0	46	46	92	100	4
5	0	0	0	0	46	0	0	0	46	92	0	0	100	0	0	0	0	46	92	0	0	46	92	0	5
ID	1	68	71 (76)	64 (67)	2 (32)	76	65 (67)	74	25 (38)	3 (24)	75	60 (63)	4 (16)	73	70	66	53 (55)	33 (42)	17 (24)	67	54	39 (50)	18 (24)	63	ID
t	31.9	27.3	32.7	34.4	34.5	30.4	31.9	23.3	33.3	27.8	24.7	22.9	22.9	24.2	22.8	30.0	32.1	32.3	32.2	26.5	29.9	30.7	26.7	24.2	t
[DEG]	0~85	0~85	0~85	0~85	0~85	0~85	0~85	0~85	0~85	0~85	0~85	0~85	0~85	0~85	0~85	0~85	0~85	0~85	0~85	0~85	0~85	0~85	0~85	0~85	[DEG]
	20	11	11	11	6	11	11	7	6	5	7	5	4	9	11	9	6	6	5	7	6	6	4	4	
	100t×2	100t	100t	100t	60t	100t	100t	60t	60t	60t	60t	60t	60t	100t	100t	100t	60t	60t	60t	100t	60t	60t	60t	60t	

m	31.7	34.4	34.4	34.4	34.4	38.7	38.7	38.7	43.0	43.0	43.0	43.0	47.4	47.4	47.4	51.7	51.7	56.0	60.0						m
2.5																									2.5
3.0																									3.0
3.5																									3.5
4.0																									4.0
4.5																									4.5
5.0	30.0	44.0	38.0	29.5	25.2																				5.0
6.0	27.4	42.3	38.0	28.8	23.6	32.8	27.4	20.5																	6.0
7.0	25.0	38.4	38.0	26.8	22.1	32.8	27.0	20.5	27.1	23.1	20.7	19.0													7.0
8.0	22.9	35.2	38.0	24.9	20.5	32.8	25.7	20.1	27.1	23.1	20.6	19.0	21.4	18.6	15.7										8.0
9.0	21.2	32.4	35.8	23.3	19.1	30.3	24.5	18.5	27.1	23.1	19.6	18.6	21.4	18.6	15.7	16.6	14.3								9.0
10.0	19.6	30.0	32.0	21.9	17.8	28.1	23.2	17.2	26.2	23.1	18.7	17.8	21.4	18.6	15.7	16.6	14.3	13.2							10.0
11.0	18.3	25.7	27.3	20.6	16.6	26.2	21.9	16.0	24.7	22.3	17.9	16.9	21.4	18.6	15.7	16.6	14.3	13.2	10.6						11.0
12.0	17.2	22.1	23.6	19.5	15.6	23.1	20.8	14.9	23.1	21.4	17.1	15.8	21.3	18.4	15.7	16.6	14.3	13.2	10.6						12.0
14.0	15.3	16.8	18.2	17.5	14.0	17.7	18.8	13.2	17.7	18.4	15.7	14.1	18.0	16.7	14.7	16.6	14.3	13.2	10.6						14.0
16.0	13.7	13.2	14.5	15.7	12.5	14.1	15.2	11.8	14.1	14.7	14.4	12.7	14.4	15.1	13.3	14.8	13.6	13.2	10.6						16.0
18.0	12.1	10.6	11.8	12.9	11.2	11.4	12.4	10.6	11.4	12.0	12.8	11.5	11.6	12.4	12.1	12.1	12.6	12.4	10.6						18.0
20.0	10.1	8.5	9.8	10.8	10.2	9.3	10.4	9.6	9.3	9.9	10.7	10.5	9.6	10.3	11.0	10.0	10.8	10.4	10.4						20.0
22.0	8.4	7.0	8.1	9.2	9.3	7.7	8.7	8.8	7.7	8.3	9.1	9.5	8.0	8.7	9.3	8.4	9.1	8.7	8.7						22.0
24.0	7.1	5.7	6.8	7.9	8.4	6.4	7.4	8.0	6.4	7.0	7.7	8.2	6.7	7.3	8.0	7.0	7.8	7.4	7.4						24.0
26.0	6.1	4.6	5.8	6.8	7.3	5.3	6.3	7.1	5.3	5.9	6.6	7.1	5.6	6.2	6.9	5.9	6.7	6.3	6.3						26.0
28.0	5.2	3.8	4.9	5.9	6.3	4.5	5.4	6.2	4.4	5.0	5.7	6.2	4.7	5.3	6.0	5.0	5.7	5.4	5.4						28.0
30.0		3.0	4.1	5.1	5.6	3.7	4.6	5.4	3.7	4.2	4.9	5.4	3.9	4.6	5.2	4.3	5.0	4.6	4.6						30.0
32.0						3.0	4.0	4.8	3.0	3.6	4.3	4.7	3.2	3.9	4.5	3.6	4.3	3.9	3.9						32.0
34.0						2.5	3.4	4.2	2.5	3.0	3.7	4.1	2.7	3.3	3.9	3.0	3.7	3.3	3.4						34.0
36.0									1.9	2.5	3.2	3.6	2.2	2.8	3.4	2.5	3.2	2.8	2.8						36.0
38.0									1.5	2.1	2.8	3.2	1.7	2.4	3.0	2.0	2.7	2.4	2.4						38.0
40.0									1.1	1.6	2.4	2.8	1.3	2.0	2.6	1.6	2.3	2.0	2.0						40.0
42.0														1.6	2.2	1.2	2.0	1.6	1.6						42.0
44.0														1.3	1.9		1.6	1.2	1.2						44.0
46.0																	1.3								46.0
48.0																	1.0								48.0
50.0																									50.0
52.0																									52.0
54.0																									54.0
56.0																									56.0
1	0	92	46	0	0	92	46	0	92	92	46	0	92	46	0	92	46	92	100						1
2	100	46	46	46	0	46	46	0	92	46	46	46	92	92	92	92	92	92	100						2
3	0	46	46	46	46	46	46	92	46	46	46	92	92	92	92	92	92	92	100						3
4	0	46	46	46	92	46	46	92	46	46	92	92	46	92	92	92	92	92	100						4
5	100	0	46	92	92	46	92	92	46	92	92	92	46	46	92	46	92	92	100						5
ID	58	55	49	44 (46)	19(24)	50	45	20 (24)	42	46	48	21	38	31	22 (24)	32	23	24	16						ID
t	22.8	26.5	28.8	29.5	25.2	27.1	27.4	20.5	26.6	23.1	20.7	19.0	21.4	18.6	15.7	16.6	14.3	13.2	10.6						t
[DEG]	0~85	0~85	0~85	0~85	0~85	0~85	0~85	0~85	0~85	0~85	0~85	0~85	0~85	0~85	0~85	0~85	0~85	34~85	29~85						[DEG]
	4	6	5	4	3	4	4	3	4	3	3	3	3	3	2	2	2	2	2						
	60t	60t	60t	60t	26t	60t	60t	26t	60t	26t	26t	26t	26t	26t	26t	26t	26t	26t	26t						

ブーム

MB		25.4t	8.0m x 5.0m	0 °	JPN

m	12.8																								m
2.5	119.7																								2.5
3.0	107.2																								3.0
3.5	96.9																								3.5
4.0	88.3																								4.0
4.5	81.0																								4.5
5.0	74.7																								5.0
6.0	64.6																								6.0
7.0	56.6																								7.0
8.0	50.3																								8.0
9.0	44.1																								9.0
10.0	36.6																								10.0
11.0																									11.0
12.0																									12.0
14.0																									14.0
16.0																									16.0
18.0																									18.0
20.0																									20.0
22.0																									22.0
24.0																									24.0
26.0																									26.0
28.0																									28.0
30.0																									30.0
32.0																									32.0
34.0																									34.0
36.0																									36.0
38.0																									38.0
40.0																									40.0
42.0																									42.0
44.0																									44.0
46.0																									46.0
48.0																									48.0
50.0																									50.0
52.0																									52.0
54.0																									54.0
56.0																									56.0
1	0																								1
2	0																								2
3	0																								3
4	0																								4
5	0																								5
ID	1																								ID
t	31.9																								t
[DEG]	0~85																								[DEG]
	20																								
	100t×2																								

MB		25.4 t	8.0m x 5.0m	360 °	JPN

m	12.8	17.1	17.1	17.1	17.1	21.4	21.4	21.4	21.4	21.4	22.2	22.2	22.2	22.3	22.3	25.8	25.8	25.8	25.8	30.1	30.1	30.1	30.1	31.6	m
2.5	105.1																								2.5
3.0	93.4	90.0	90.0	88.0	46.6	90.0	85.7	57.2	46.6	35.3	54.0	38.6	31.8	70.1	84.3										3.0
3.5	83.7	83.4	84.1	84.0	45.2	83.8	80.3	53.4	46.6	33.0	50.5	35.5	29.4	65.5	80.6	70.0	50.0	46.6	34.8						3.5
4.0	75.6	75.3	76.0	76.5	42.8	75.7	75.6	50.1	46.0	31.0	47.4	33.0	27.3	61.4	74.9	70.0	50.0	46.6	33.0						4.0
4.5	68.7	68.4	69.1	69.6	40.7	68.8	69.7	47.1	44.0	29.3	44.6	30.7	25.5	57.9	68.0	69.5	50.0	45.7	31.1	54.3	50.0	42.4	26.7	32.0	4.5
5.0	62.8	62.5	63.2	63.7	38.8	62.9	63.8	44.5	42.1	27.7	42.1	28.7	23.9	54.7	62.1	63.6	50.0	44.0	29.4	51.3	50.0	42.4	25.6	30.4	5.0
6.0	52.6	52.3	53.0	53.6	35.5	52.7	53.8	40.1	38.5	25.0	37.9	25.4	21.2	49.3	51.8	53.5	50.0	41.0	26.5	46.1	50.0	42.4	23.3	26.8	6.0
7.0	41.3	40.8	41.8	42.5	32.8	41.4	42.8	36.5	35.1	22.7	34.5	22.8	19.0	41.9	40.1	42.4	44.3	37.3	24.1	41.8	43.7	39.6	21.2	24.0	7.0
8.0	32.4	31.9	32.8	33.6	30.5	32.5	33.8	33.4	32.3	20.9	31.2	20.6	17.3	33.0	31.3	33.4	35.2	34.3	22.1	33.0	34.6	36.2	19.4	21.7	8.0
9.0	26.3	25.8	26.7	27.4	28.5	26.4	27.6	28.0	29.6	19.2	28.1	18.8	15.8	26.8	25.3	27.2	28.8	30.0	20.4	26.8	28.3	29.8	17.8	19.7	9.0
10.0	21.9	21.4	22.2	22.8	23.9	21.9	23.0	23.4	25.0	17.6	23.5	17.2	14.5	22.3	20.8	22.7	24.2	25.3	19.0	22.3	23.7	25.1	16.5	18.1	10.0
11.0		17.9	18.7	19.3	20.4	18.4	19.5	19.9	21.4	16.3	20.0	15.9	13.5	18.8	17.4	19.2	20.7	21.7	17.7	18.8	20.2	21.5	15.3	16.6	11.0
12.0		15.2	16.0	16.6	17.6	15.7	16.8	17.2	18.6	15.1	17.2	14.8	12.5	16.1	14.7	16.5	17.9	18.9	16.6	16.1	17.4	18.7	14.2	15.4	12.0
14.0		11.3	12.0	12.6	13.5	11.7	12.7	13.1	14.4	13.2	13.1	12.9	11.0	12.1	10.8	12.4	13.7	14.7	14.8	12.1	13.3	14.5	12.3	13.4	14.0
16.0						8.9	9.9	10.2	11.5	11.5	10.2	11.0	9.8	9.3	8.0	9.6	10.8	11.7	12.3	9.2	10.4	11.6	10.9	11.7	16.0
18.0						6.9	7.8	8.1	9.3	9.4	8.1	8.9	8.9	7.2	6.0	7.5	8.7	9.6	10.1	7.1	8.3	9.4	9.7	9.5	18.0
20.0																5.9	7.0	7.9	8.4	5.5	6.6	7.7	8.6	7.8	20.0
22.0																4.6	5.7	6.6	7.1	4.2	5.3	6.4	7.3	6.5	22.0
24.0																				3.2	4.3	5.4	6.2	5.4	24.0
26.0																				2.4	3.4	4.5	5.3	4.5	26.0
28.0																								3.8	28.0
30.0																									30.0
32.0																									32.0
34.0																									34.0
36.0																									36.0
38.0																									38.0
40.0																									40.0
42.0																									42.0
44.0																									44.0
46.0																									46.0
48.0																									48.0
50.0																									50.0
52.0																									52.0
54.0																									54.0
56.0																									56.0
1	0	46	0	0	0	46	0	0	0	0	0	0	0	0	100	46	0	0	0	92	46	0	0	0	1
2	0	0	46	0	0	46	46	0	0	0	0	0	0	100	0	46	46	0	0	46	46	46	0	0	2
3	0	0	0	46	0	0	46	92	0	0	100	0	0	0	0	46	46	46	0	46	46	46	0	100	3
4	0	0	0	0	0	0	0	0	46	0	0	100	0	0	0	0	46	46	46	0	46	46	92	100	4
5	0	0	0	0	46	0	0	0	46	92	0	0	100	0	0	0	0	46	92	0	0	46	92	0	5
ID	1	68	71 (76)	64 (67)	2 (32)	76	65 (67)	74	25 (38)	3 (24)	75	60 (63)	4 (16)	73	70	66	53 (55)	33 (42)	17 (24)	67	54	39 (50)	18 (24)	63	ID
t	31.9	27.3	32.7	34.4	34.5	30.4	31.9	23.3	33.3	27.8	24.7	22.9	22.9	24.2	22.8	30.0	32.1	32.3	32.2	26.5	29.9	30.7	26.7	24.2	t
[DEG]	0~85	0~85	0~85	0~85	0~85	0~85	0~85	0~85	0~85	0~85	0~85	0~85	0~85	0~85	0~85	0~85	0~85	0~85	0~85	0~85	0~85	0~85	0~85	0~85	[DEG]
	20	11	11	11	6	11	11	7	6	5	7	5	4	9	11	9	6	6	5	7	6	6	4	4	
	100t×2	100t	100t	100t	60t	100t	100t	60t	60t	60t	60t	60t	60t	100t	100t	100t	60t	60t	60t	100t	60t	60t	60t	60t	

m	31.7	34.4	34.4	34.4	34.4	38.7	38.7	38.7	43.0	43.0	43.0	43.0	47.4	47.4	47.4	51.7	51.7	56.0	60.0						m
2.5																									2.5
3.0																									3.0
3.5																									3.5
4.0																									4.0
4.5																									4.5
5.0	30.0	44.0	38.0	29.5	25.2																				5.0
6.0	27.4	42.3	38.0	28.8	23.6	32.8	27.4	20.5																	6.0
7.0	25.0	38.4	38.0	26.8	22.1	32.8	27.0	20.5	27.1	23.1	20.7	19.0													7.0
8.0	22.9	33.9	35.6	24.9	20.5	32.8	25.7	20.1	27.1	23.1	20.6	19.0	21.4	18.6	15.7										8.0
9.0	21.2	27.7	29.3	23.3	19.1	28.8	24.5	18.5	27.1	23.1	19.6	18.6	21.4	18.6	15.7	16.6	14.3								9.0
10.0	19.6	23.1	24.6	21.9	17.8	24.1	23.2	17.2	24.1	23.1	18.7	17.8	21.4	18.6	15.7	16.6	14.3	13.2							10.0
11.0	18.3	19.6	21.1	20.6	16.6	20.6	21.8	16.0	20.6	21.3	17.9	16.9	20.9	18.6	15.7	16.6	14.3	13.2	10.6						11.0
12.0	17.2	16.9	18.2	19.4	15.6	17.8	18.9	14.9	17.8	18.5	17.1	15.8	18.1	18.4	15.7	16.6	14.3	13.2	10.6						12.0
14.0	14.4	12.8	14.1	15.2	14.0	13.6	14.7	13.2	13.6	14.3	15.1	14.1	13.9	14.7	14.7	14.4	14.3	13.2	10.6						14.0
16.0	11.5	9.9	11.2	12.3	12.5	10.7	11.8	11.8	10.7	11.4	12.2	12.6	11.0	11.7	12.5	11.4	12.2	11.8	10.6						16.0
18.0	9.3	7.8	9.0	10.1	10.6	8.6	9.6	10.5	8.6	9.2	10.0	10.4	8.8	9.5	10.2	9.2	10.0	9.6	9.6						18.0
20.0	7.6	6.2	7.3	8.4	8.9	6.9	7.9	8.8	6.9	7.5	8.3	8.7	7.2	7.9	8.5	7.6	8.3	7.9	7.9						20.0
22.0	6.3	4.9	6.0	7.0	7.5	5.6	6.6	7.4	5.6	6.2	6.9	7.4	5.9	6.5	7.2	6.2	7.0	6.6	6.6						22.0
24.0	5.2	3.8	5.0	5.9	6.4	4.5	5.5	6.3	4.5	5.1	5.8	6.3	4.8	5.4	6.1	5.1	5.9	5.5	5.5						24.0
26.0	4.3	3.0	4.1	5.0	5.5	3.7	4.6	5.4	3.6	4.2	4.9	5.4	3.9	4.5	5.2	4.2	4.9	4.6	4.6						26.0
28.0	3.6	2.3	3.3	4.3	4.8	2.9	3.9	4.6	2.9	3.4	4.2	4.6	3.1	3.8	4.4	3.5	4.2	3.8	3.8						28.0
30.0		1.6	2.7	3.7	4.1	2.3	3.2	4.0	2.3	2.8	3.5	3.9	2.5	3.1	3.7	2.8	3.5	3.2	3.2						30.0
32.0						1.7	2.7	3.4	1.7	2.3	2.9	3.4	1.9	2.6	3.2	2.3	3.0	2.6	2.6						32.0
34.0						1.3	2.2	3.0	1.2	1.8	2.5	2.9	1.5	2.1	2.7	1.8	2.5	2.1	2.1						34.0
36.0										1.3	2.0	2.5	1.0	1.7	2.3	1.3	2.0	1.7	1.7						36.0
38.0											1.7	2.1		1.3	1.9		1.7	1.3	1.3						38.0
40.0											1.4	1.8			1.5		1.3								40.0
42.0															1.2		1.0								42.0
44.0																									44.0
46.0																									46.0
48.0																									48.0
50.0																									50.0
52.0																									52.0
54.0																									54.0
56.0																									56.0
1	0	92	46	0	0	92	46	0	92	92	46	0	92	46	0	92	46	92	100						1
2	100	46	46	46	0	46	46	0	92	46	46	46	92	92	92	92	92	92	100						2
3	0	46	46	46	46	46	46	92	46	46	46	92	92	92	92	92	92	92	100						3
4	0	46	46	46	92	46	46	92	46	46	92	92	46	92	92	92	92	92	100						4
5	100	0	46	92	92	46	92	92	46	92	92	92	46	46	92	46	92	92	100						5
ID	58	55	49	44 (46)	19(24)	50	45	20 (24)	42	46	48	21	38	31	22 (24)	32	23	24	16						ID
t	22.8	26.5	28.8	29.5	25.2	27.1	27.4	20.5	26.6	23.1	20.7	19.0	21.4	18.6	15.7	16.6	14.3	13.2	10.6						t
[DEG]	0~85	0~85	0~85	0~85	0~85	0~85	0~85	0~85	30~85	0~85	0~85	0~85	30~85	0~85	0~85	34~85	0~85	34~85	40~85						[DEG]
	4	6	5	4	3	4	4	3	4	3	3	3	3	3	2	2	2	2	2						
	60t	60t	60t	60t	26t	60t	60t	26t	60t	26t	26t	26t	26t	26t	26t	26t	26t	26t	26t						

ブーム

MB		15.4 t	8.0m x 7.5m	0 °	JPN

m	12.8																								m
2.5	117.5																								2.5
3.0	105.2																								3.0
3.5	95.1																								3.5
4.0	86.7																								4.0
4.5	79.5																								4.5
5.0	73.4																								5.0
6.0	63.3																								6.0
7.0	55.5																								7.0
8.0	44.3																								8.0
9.0	35.4																								9.0
10.0	29.2																								10.0
11.0																									11.0
12.0																									12.0
14.0																									14.0
16.0																									16.0
18.0																									18.0
20.0																									20.0
22.0																									22.0
24.0																									24.0
26.0																									26.0
28.0																									28.0
30.0																									30.0
32.0																									32.0
34.0																									34.0
36.0																									36.0
38.0																									38.0
40.0																									40.0
42.0																									42.0
44.0																									44.0
46.0																									46.0
48.0																									48.0
50.0																									50.0
52.0																									52.0
54.0																									54.0
56.0																									56.0
1	0																								1
2	0																								2
3	0																								3
4	0																								4
5	0																								5
ID	1																								ID
t	31.9																								t
[DEG]	0~85																								[DEG]
	20																								
	100t×2																								

MB		15.4 t	8.0m x 7.5m	360 °	JPN

m	12.8	17.1	17.1	17.1	17.1	21.4	21.4	21.4	21.4	21.4	22.2	22.2	22.2	22.3	22.3	25.8	25.8	25.8	25.8	30.1	30.1	30.1	30.1	31.6	m
2.5	111.9																								2.5
3.0	101.3	90.0	90.0	88.0	46.6	90.0	85.7	57.2	46.6	35.3	54.0	38.6	31.8	70.1	84.3										3.0
3.5	92.4	90.0	90.0	84.0	45.2	90.0	80.3	53.4	46.6	33.0	50.5	35.5	29.4	65.5	80.6	70.0	50.0	46.6	34.8						3.5
4.0	84.1	83.9	84.4	79.0	42.8	84.2	75.6	50.1	46.0	31.0	47.4	33.0	27.3	61.4	75.6	70.0	50.0	46.6	33.0						4.0
4.5	76.9	76.6	77.2	74.5	40.7	77.0	71.4	47.1	44.0	29.3	44.6	30.7	25.5	57.9	71.2	70.0	50.0	45.7	31.1	54.3	50.0	42.4	26.7	32.0	4.5
5.0	69.9	69.6	70.3	70.6	38.8	70.0	67.6	44.5	42.1	27.7	42.1	28.7	23.9	54.7	67.4	70.0	50.0	44.0	29.4	51.3	50.0	42.4	25.6	30.4	5.0
6.0	58.7	58.3	59.0	59.6	35.5	58.8	59.8	40.1	38.5	25.0	37.9	25.4	21.2	49.3	57.9	59.5	50.0	41.0	26.5	46.1	50.0	42.4	23.3	26.8	6.0
7.0	50.1	49.7	50.4	51.0	32.8	50.1	51.2	36.5	35.1	22.7	34.5	22.8	19.0	44.8	49.2	50.9	46.6	37.3	24.1	41.8	49.3	39.6	21.2	24.0	7.0
8.0	43.3	43.0	43.7	44.2	30.5	43.4	44.4	33.4	32.3	20.9	31.2	20.6	17.3	41.1	42.5	44.1	43.2	34.3	22.1	38.2	45.0	36.7	19.4	21.7	8.0
9.0	35.4	34.9	35.8	36.6	28.5	35.4	36.8	30.8	29.9	19.2	28.5	18.8	15.8	36.0	34.2	36.4	38.2	31.7	20.4	35.2	37.7	34.2	17.8	19.7	9.0
10.0	29.2	28.6	29.5	30.2	26.9	29.2	30.4	28.6	27.8	17.6	26.2	17.2	14.5	29.6	28.0	30.1	31.7	29.5	19.0	29.6	31.2	32.0	16.5	18.1	10.0
11.0		23.9	24.8	25.5	25.4	24.5	25.7	26.1	26.0	16.3	24.3	15.9	13.5	24.9	23.3	25.3	26.9	27.6	17.7	24.9	26.4	27.8	15.3	16.6	11.0
12.0		20.1	20.9	21.6	22.8	20.6	21.8	22.3	23.9	15.1	22.3	14.8	12.5	21.1	19.5	21.5	23.1	24.2	16.6	21.0	22.6	24.0	14.2	15.4	12.0
14.0		14.7	15.5	16.1	17.1	15.2	16.3	16.7	18.2	13.2	16.7	12.9	11.0	15.6	14.1	16.0	17.4	18.5	14.8	15.6	16.9	18.3	12.3	13.4	14.0
16.0						11.5	12.6	12.9	14.3	11.8	13.0	11.5	9.8	11.9	10.6	12.3	13.6	14.6	13.3	11.9	13.2	14.5	10.9	11.8	16.0
18.0						8.9	10.0	10.2	11.6	10.6	10.3	10.3	8.9	9.3	8.0	9.6	10.9	11.9	12.1	9.2	10.5	11.7	9.7	10.5	18.0
20.0																7.6	8.9	9.8	10.4	7.2	8.4	9.6	8.7	9.4	20.0
22.0																6.1	7.3	8.2	8.7	5.7	6.8	8.0	7.9	8.1	22.0
24.0																				4.4	5.6	6.7	7.2	6.8	24.0
26.0																				3.5	4.6	5.7	6.5	5.7	26.0
28.0																								4.8	28.0
30.0																									30.0
32.0																									32.0
34.0																									34.0
36.0																									36.0
38.0																									38.0
40.0																									40.0
42.0																									42.0
44.0																									44.0
46.0																									46.0
48.0																									48.0
50.0																									50.0
52.0																									52.0
54.0																									54.0
56.0																									56.0
1	0	46	0	0	0	46	0	0	0	0	0	0	0	0	100	46	0	0	0	92	46	0	0	0	1
2	0	0	46	0	0	46	46	0	0	0	0	0	0	100	0	46	46	0	0	46	46	46	0	0	2
3	0	0	0	46	0	0	46	92	0	0	100	0	0	0	0	46	46	46	0	46	46	46	0	100	3
4	0	0	0	0	0	0	0	0	46	0	0	100	0	0	0	0	46	46	46	0	46	46	92	100	4
5	0	0	0	0	46	0	0	0	46	92	0	0	100	0	0	0	0	46	92	0	0	46	92	0	5
ID	1	68	71 (76)	64 (67)	2 (32)	76	65 (67)	74	25 (38)	3 (24)	75	60 (63)	4 (16)	73	70	66	53 (55)	33 (42)	17 (24)	67	54	39 (50)	18 (24)	63	ID
t	31.9	27.3	32.7	34.4	34.5	30.4	31.9	23.3	33.3	27.8	24.7	22.9	22.9	24.2	22.8	30.0	32.1	32.3	32.2	26.5	29.9	30.7	26.7	24.2	t
[DEG]	0~85	0~85	0~85	0~85	0~85	0~85	0~85	0~85	0~85	0~85	0~85	0~85	0~85	0~85	0~85	0~85	0~85	0~85	0~85	0~85	0~85	0~85	0~85	0~85	[DEG]
	20	11	11	11	6	11	11	7	6	5	7	5	4	9	11	9	6	6	5	7	6	6	4	4	
	100t×2	100t	100t	100t	60t	100t	100t	60t	60t	60t	60t	60t	60t	100t	100t	100t	60t	60t	60t	100t	60t	60t	60t	60t	

m	31.7	34.4	34.4	34.4	34.4	38.7	38.7	38.7	43.0	43.0	43.0	43.0	47.4	47.4	47.4	51.7	51.7	56.0	60.0	m
2.5																				2.5
3.0																				3.0
3.5																				3.5
4.0																				4.0
4.5																				4.5
5.0	30.0	44.0	38.0	29.5	25.2															5.0
6.0	27.4	42.3	38.0	28.8	23.6	32.8	27.4	20.5												6.0
7.0	25.0	38.4	38.0	26.8	22.1	32.8	27.0	20.5	27.1	23.1	20.7	19.0								7.0
8.0	22.9	35.2	38.0	24.9	20.5	32.8	25.7	20.1	27.1	23.1	20.6	19.0	21.4	18.6	15.7					8.0
9.0	21.2	32.4	35.8	23.3	19.1	30.3	24.5	18.5	27.1	23.1	19.6	18.6	21.4	18.6	15.7	16.6	14.3			9.0
10.0	19.6	30.0	32.2	21.9	17.8	28.1	23.2	17.2	26.2	23.1	18.7	17.8	21.4	18.6	15.7	16.6	14.3	13.2		10.0
11.0	18.3	25.8	27.4	20.6	16.6	26.2	21.9	16.0	24.7	22.3	17.9	16.9	21.4	18.6	15.7	16.6	14.3	13.2	10.6	11.0
12.0	17.2	21.9	23.5	19.5	15.6	23.0	20.8	14.9	23.0	21.4	17.1	15.8	21.3	18.4	15.7	16.6	14.3	13.2	10.6	12.0
14.0	15.3	16.4	17.8	17.5	14.0	17.3	18.6	13.2	17.3	18.1	15.7	14.1	17.7	16.7	14.7	16.6	14.3	13.2	10.6	14.0
16.0	13.7	12.6	14.0	15.2	12.5	13.5	14.7	11.8	13.5	14.2	14.4	12.7	13.8	14.6	13.3	14.3	13.6	13.2	10.6	16.0
18.0	11.6	9.9	11.3	12.4	11.2	10.8	11.9	10.6	10.8	11.5	12.3	11.5	11.1	11.8	12.1	11.5	12.3	11.9	10.6	18.0
20.0	9.5	7.9	9.2	10.3	10.2	8.7	9.8	9.6	8.7	9.4	10.2	10.5	9.0	9.7	10.5	9.4	10.2	9.8	9.8	20.0
22.0	7.9	6.3	7.6	8.6	9.2	7.1	8.2	8.8	7.1	7.7	8.5	9.0	7.4	8.1	8.8	7.8	8.6	8.2	8.2	22.0
24.0	6.6	5.1	6.3	7.3	7.9	5.8	6.9	7.7	5.8	6.4	7.2	7.7	6.1	6.8	7.5	6.5	7.2	6.8	6.9	24.0
26.0	5.5	4.1	5.2	6.3	6.8	4.8	5.8	6.7	4.8	5.4	6.1	6.6	5.0	5.7	6.4	5.4	6.2	5.8	5.8	26.0
28.0	4.7	3.2	4.4	5.4	5.9	3.9	4.9	5.7	3.9	4.5	5.2	5.7	4.1	4.8	5.5	4.5	5.3	4.9	4.9	28.0
30.0		2.5	3.6	4.6	5.1	3.2	4.2	5.0	3.2	3.7	4.5	4.9	3.4	4.1	4.7	3.8	4.5	4.1	4.1	30.0
32.0						2.5	3.5	4.3	2.5	3.1	3.8	4.3	2.8	3.4	4.1	3.1	3.8	3.5	3.5	32.0
34.0						1.9	3.0	3.8	1.8	2.5	3.3	3.7	2.1	2.9	3.5	2.5	3.3	2.9	2.9	34.0
36.0									1.3	1.9	2.8	3.2	1.5	2.3	3.0	1.9	2.8	2.3	2.4	36.0
38.0										1.4	2.3	2.8	1.0	1.8	2.5	1.4	2.3	1.8	1.8	38.0
40.0										1.0	1.9	2.4		1.4	2.1	1.0	1.8	1.4	1.4	40.0
42.0														1.0	1.7		1.4	1.0	1.0	42.0
44.0															1.3		1.1			44.0
46.0																				46.0
48.0																				48.0
50.0																				50.0
52.0																				52.0
54.0																				54.0
56.0																				56.0
1	0	92	46	0	0	92	46	0	92	92	46	0	92	46	0	92	46	92	100	1
2	100	46	46	46	0	46	46	0	92	46	46	46	92	92	92	92	92	92	100	2
3	0	46	46	46	46	46	46	92	46	46	46	92	92	92	92	92	92	92	100	3
4	0	46	46	46	92	46	46	92	46	46	92	92	46	92	92	92	92	92	100	4
5	100	0	46	92	92	46	92	92	46	92	92	92	46	46	92	46	92	92	100	5
ID	58	55	49	44 (46)	19(24)	50	45	20 (24)	42	46	48	21	38	31	22 (24)	32	23	24	16	ID
t	22.8	26.5	28.8	29.5	25.2	27.1	27.4	20.5	26.6	23.1	20.7	19.0	21.4	18.6	15.7	16.6	14.3	13.2	10.6	t
[DEG]	0~85	0~85	0~85	0~85	0~85	0~85	0~85	0~85	0~85	0~85	0~85	0~85	30~85	0~85	0~85	25~85	0~85	30~85	33~85	[DEG]
	4	6	5	4	3	4	4	3	4	3	3	3	3	3	2	2	2	2	2	
	60t	60t	60t	60t	26t	60t	60t	26t	60t	26t	26t	26t	26t	26t	26t	26t	26t	26t	26t	

ブーム

MB		15.4t	8.0m x 6.2m	0 °	JPN

m	12.8	m
2.5	117.5	2.5
3.0	105.2	3.0
3.5	95.1	3.5
4.0	86.7	4.0
4.5	79.5	4.5
5.0	73.4	5.0
6.0	63.3	6.0
7.0	55.5	7.0
8.0	44.3	8.0
9.0	35.4	9.0
10.0	29.1	10.0
11.0		11.0
12.0		12.0
14.0		14.0
16.0		16.0
18.0		18.0
20.0		20.0
22.0		22.0
24.0		24.0
26.0		26.0
28.0		28.0
30.0		30.0
32.0		32.0
34.0		34.0
36.0		36.0
38.0		38.0
40.0		40.0
42.0		42.0
44.0		44.0
46.0		46.0
48.0		48.0
50.0		50.0
52.0		52.0
54.0		54.0
56.0		56.0
1	0	1
2	0	2
3	0	3
4	0	4
5	0	5
ID	1	ID
t	31.9	t
[DEG]	0~85	[DEG]
	20	
	100t×2	

MB		15.4 t	8.0m x 6.2m	360 °	JPN

m	12.8	17.1	17.1	17.1	17.1	21.4	21.4	21.4	21.4	21.4	22.2	22.2	22.2	22.3	22.3	25.8	25.8	25.8	25.8	30.1	30.1	30.1	30.1	31.6	m
2.5	108.3																								2.5
3.0	96.7	90.0	90.0	88.0	46.6	90.0	85.7	57.2	46.6	35.3	54.0	38.6	31.8	70.1	84.3										3.0
3.5	87.1	86.8	87.4	84.0	45.2	87.1	80.3	53.4	46.6	33.0	50.5	35.5	29.4	65.5	80.6	70.0	50.0	46.6	34.8						3.5
4.0	78.9	78.6	79.2	79.0	42.8	79.0	75.6	50.1	46.0	31.0	47.4	33.0	27.3	61.4	75.6	70.0	50.0	46.6	33.0						4.0
4.5	71.7	71.3	72.1	72.6	40.7	71.8	71.4	47.1	44.0	29.3	44.6	30.7	25.5	57.9	70.9	70.0	50.0	45.7	31.1	54.3	50.0	42.4	26.7	32.0	4.5
5.0	64.9	64.6	65.3	65.9	38.8	65.0	66.0	44.5	42.1	27.7	42.1	28.7	23.9	54.7	64.1	65.8	50.0	44.0	29.4	51.3	50.0	42.4	25.6	30.4	5.0
6.0	54.1	53.8	54.5	55.1	35.5	54.2	55.3	40.1	38.5	25.0	37.9	25.4	21.2	49.3	53.3	55.0	50.0	41.0	26.5	46.1	50.0	42.4	23.3	26.8	6.0
7.0	44.1	43.5	44.7	45.6	32.8	44.2	45.9	36.5	35.1	22.7	34.5	22.8	19.0	44.8	42.8	45.4	46.6	37.3	24.1	41.8	46.9	39.6	21.2	24.0	7.0
8.0	33.6	33.1	34.1	34.9	30.5	33.7	35.2	33.4	32.3	20.9	31.2	20.6	17.3	34.3	32.4	34.8	36.7	34.3	22.1	34.3	36.1	36.7	19.4	21.7	8.0
9.0	26.7	26.1	27.1	27.8	28.5	26.7	28.1	28.6	29.9	19.2	28.5	18.8	15.8	27.2	25.5	27.7	29.5	30.7	20.4	27.2	28.9	30.5	17.8	19.7	9.0
10.0	21.8	21.2	22.1	22.8	24.0	21.8	23.0	23.5	25.2	17.6	23.6	17.2	14.5	22.3	20.7	22.7	24.3	25.5	19.0	22.2	23.8	25.3	16.5	18.1	10.0
11.0		17.6	18.4	19.1	20.2	18.1	19.3	19.7	21.3	16.3	19.8	15.9	13.5	18.5	17.0	18.9	20.5	21.6	17.7	18.5	20.0	21.4	15.3	16.6	11.0
12.0		14.7	15.5	16.2	17.3	15.2	16.4	16.8	18.3	15.1	16.8	14.8	12.5	15.7	14.2	16.0	17.5	18.6	16.6	15.6	17.0	18.4	14.2	15.4	12.0
14.0		10.6	11.4	12.0	13.0	11.1	12.2	12.5	13.9	13.2	12.6	12.9	11.0	11.5	10.1	11.9	13.2	14.2	14.8	11.5	12.8	14.1	12.3	13.4	14.0
16.0						8.3	9.3	9.6	11.0	11.0	9.7	10.5	9.8	8.6	7.4	9.0	10.3	11.2	11.8	8.6	9.8	11.1	10.9	11.2	16.0
18.0						6.2	7.2	7.5	8.8	8.8	7.5	8.3	8.9	6.6	5.3	6.9	8.1	9.0	9.6	6.5	7.7	8.9	9.7	9.0	18.0
20.0																5.3	6.5	7.4	7.9	4.9	6.1	7.2	8.1	7.3	20.0
22.0																4.1	5.2	6.1	6.6	3.7	4.8	5.9	6.8	6.0	22.0
24.0																				2.7	3.8	4.9	5.7	4.9	24.0
26.0																				1.8	2.9	4.0	4.8	4.0	26.0
28.0																								3.3	28.0
30.0																									30.0
32.0																									32.0
34.0																									34.0
36.0																									36.0
38.0																									38.0
40.0																									40.0
42.0																									42.0
44.0																									44.0
46.0																									46.0
48.0																									48.0
50.0																									50.0
52.0																									52.0
54.0																									54.0
56.0																									56.0
1	0	46	0	0	0	46	0	0	0	0	0	0	0	0	100	46	0	0	0	92	46	0	0	0	1
2	0	0	46	0	0	46	46	0	0	0	0	0	0	100	0	46	46	0	0	46	46	46	0	0	2
3	0	0	0	46	0	0	46	92	0	0	100	0	0	0	0	46	46	46	0	46	46	46	0	100	3
4	0	0	0	0	0	0	0	0	46	0	0	100	0	0	0	0	46	46	46	0	46	46	92	100	4
5	0	0	0	0	46	0	0	0	46	92	0	0	100	0	0	0	0	46	92	0	0	46	92	0	5
ID	1	68	71 (76)	64 (67)	2 (32)	76	65 (67)	74	25 (38)	3 (24)	75	60 (63)	4 (16)	73	70	66	53 (55)	33 (42)	17 (24)	67	54	39 (50)	18 (24)	63	ID
t	31.9	27.3	32.7	34.4	34.5	30.4	31.9	23.3	33.3	27.8	24.7	22.9	22.9	24.2	22.8	30.0	32.1	32.3	32.2	26.5	29.9	30.7	26.7	24.2	t
[DEG]	0~85	0~85	0~85	0~85	0~85	0~85	0~85	0~85	0~85	0~85	0~85	0~85	0~85	0~85	0~85	0~85	0~85	0~85	0~85	0~85	0~85	0~85	0~85	0~85	[DEG]
	20	11	11	11	6	11	11	7	6	5	7	5	4	9	11	9	6	6	5	7	6	6	4	4	
	100t×2	100t	100t	100t	60t	100t	100t	60t	60t	60t	60t	60t	60t	100t	100t	100t	60t	60t	60t	100t	60t	60t	60t	60t	

m	31.7	34.4	34.4	34.4	34.4	38.7	38.7	38.7	43.0	43.0	43.0	43.0	47.4	47.4	47.4	51.7	51.7	56.0	60.0						m
2.5																									2.5
3.0																									3.0
3.5																									3.5
4.0																									4.0
4.5																									4.5
5.0	30.0	44.0	38.0	29.5	25.2																				5.0
6.0	27.4	42.3	38.0	28.8	23.6	32.8	27.4	20.5																	6.0
7.0	25.0	38.4	38.0	26.8	22.1	32.8	27.0	20.5	27.1	23.1	20.7	19.0													7.0
8.0	22.9	35.2	37.2	24.9	20.5	32.8	25.7	20.1	27.1	23.1	20.6	19.0	21.4	18.6	15.7										8.0
9.0	21.2	28.2	29.9	23.3	19.1	29.4	24.5	18.5	27.1	23.1	19.6	18.6	21.4	18.6	15.7	16.6	14.3								9.0
10.0	19.6	23.2	24.8	21.9	17.8	24.2	23.2	17.2	24.2	23.1	18.7	17.8	21.4	18.6	15.7	16.6	14.3	13.2							10.0
11.0	18.3	19.4	20.9	20.6	16.6	20.4	21.7	16.0	20.4	21.2	17.9	16.9	20.8	18.6	15.7	16.6	14.3	13.2	10.6						11.0
12.0	17.2	16.5	17.9	19.2	15.6	17.4	18.7	14.9	17.4	18.2	17.1	15.8	17.8	18.4	15.7	16.6	14.3	13.2	10.6						12.0
14.0	14.0	12.2	13.6	14.8	14.0	13.1	14.3	13.2	13.1	13.8	14.7	14.1	13.4	14.2	14.7	13.9	14.3	13.2	10.6						14.0
16.0	11.0	9.3	10.6	11.8	12.4	10.2	11.3	11.8	10.2	10.8	11.7	12.2	10.5	11.2	12.0	10.9	11.7	11.3	10.6						16.0
18.0	8.8	7.2	8.5	9.6	10.1	8.0	9.1	10.0	8.0	8.6	9.4	9.9	8.3	9.0	9.7	8.7	9.5	9.1	9.1						18.0
20.0	7.1	5.6	6.8	7.9	8.4	6.4	7.4	8.3	6.4	7.0	7.7	8.2	6.6	7.3	8.0	7.0	7.8	7.4	7.4						20.0
22.0	5.8	4.3	5.5	6.5	7.0	5.1	6.1	6.9	5.1	5.7	6.4	6.9	5.3	6.0	6.7	5.7	6.5	6.1	6.1						22.0
24.0	4.7	3.3	4.4	5.5	6.0	4.0	5.0	5.9	4.0	4.6	5.3	5.8	4.3	4.9	5.6	4.6	5.4	5.0	5.0						24.0
26.0	3.9	2.4	3.6	4.6	5.1	3.2	4.1	5.0	3.1	3.7	4.4	4.9	3.4	4.1	4.7	3.8	4.5	4.1	4.1						26.0
28.0	3.1	1.8	2.9	3.8	4.3	2.4	3.4	4.2	2.4	3.0	3.7	4.2	2.7	3.3	4.0	3.0	3.7	3.4	3.4						28.0
30.0		1.2	2.3	3.2	3.7	1.8	2.8	3.6	1.8	2.4	3.1	3.5	2.0	2.7	3.3	2.4	3.1	2.7	2.8						30.0
32.0						1.3	2.3	3.0	1.3	1.8	2.5	3.0	1.5	2.2	2.8	1.9	2.6	2.2	2.2						32.0
34.0							1.8	2.6		1.4	2.1	2.5	1.0	1.7	2.3	1.4	2.1	1.7	1.7						34.0
36.0										1.0	1.7	2.1		1.3	1.9	1.0	1.7	1.3	1.3						36.0
38.0											1.3	1.7			1.5		1.3								38.0
40.0											1.0	1.4			1.2		1.0								40.0
42.0																									42.0
44.0																									44.0
46.0																									46.0
48.0																									48.0
50.0																									50.0
52.0																									52.0
54.0																									54.0
56.0																									56.0
1	0	92	46	0	0	92	46	0	92	92	46	0	92	46	0	92	46	92	100						1
2	100	46	46	46	0	46	46	0	92	46	46	46	92	92	92	92	92	92	100						2
3	0	46	46	46	46	46	46	92	46	46	46	92	92	92	92	92	92	92	100						3
4	0	46	46	46	92	46	46	92	46	46	92	92	46	92	92	92	92	92	100						4
5	100	0	46	92	92	46	92	92	46	92	92	92	46	46	92	46	92	92	100						5
ID	58	55	49	44 (46)	19(24)	50	45	20 (24)	42	46	48	21	38	31	22 (24)	32	23	24	16						ID
t	22.8	26.5	28.8	29.5	25.2	27.1	27.4	20.5	26.6	23.1	20.7	19.0	21.4	18.6	15.7	16.6	14.3	13.2	10.6						t
[DEG]	0~85	0~85	0~85	0~85	0~85	0~85	0~85	0~85	24~85	0~85	0~85	0~85	35~85	35~85	0~85	38~85	24~85	38~85	44~85						[DEG]
	4	6	5	4	3	4	4	3	4	3	3	3	3	3	2	2	2	2	2						
	60t	60t	60t	60t	26t	60t	60t	26t	60t	26t	26t	26t	26t	26t	26t	26t	26t	26t	26t						

ブーム

MB		15.4t	8.0m x 5.0m	0 °	JPN

m	12.8																								m
2.5	117.5																								2.5
3.0	105.2																								3.0
3.5	95.1																								3.5
4.0	86.7																								4.0
4.5	79.5																								4.5
5.0	73.4																								5.0
6.0	63.3																								6.0
7.0	55.5																								7.0
8.0	44.2																								8.0
9.0	35.4																								9.0
10.0	29.1																								10.0
11.0																									11.0
12.0																									12.0
14.0																									14.0
16.0																									16.0
18.0																									18.0
20.0																									20.0
22.0																									22.0
24.0																									24.0
26.0																									26.0
28.0																									28.0
30.0																									30.0
32.0																									32.0
34.0																									34.0
36.0																									36.0
38.0																									38.0
40.0																									40.0
42.0																									42.0
44.0																									44.0
46.0																									46.0
48.0																									48.0
50.0																									50.0
52.0																									52.0
54.0																									54.0
56.0																									56.0
1	0																								1
2	0																								2
3	0																								3
4	0																								4
5	0																								5
ID	1																								ID
t	31.9																								t
[DEG]	0~85																								[DEG]
	20																								
	100t×2																								

MB		15.4 t	8.0m x 5.0m	360 °	JPN

m	12.8	17.1	17.1	17.1	17.1	21.4	21.4	21.4	21.4	21.4	22.2	22.2	22.2	22.3	22.3	25.8	25.8	25.8	25.8	30.1	30.1	30.1	30.1	31.6	m
2.5	101.9																								2.5
3.0	90.3	90.0	90.0	88.0	46.6	90.0	85.7	57.2	46.6	35.3	54.0	38.6	31.8	70.1	84.3										3.0
3.5	80.7	80.5	81.1	81.6	45.2	80.8	80.3	53.4	46.6	33.0	50.5	35.5	29.4	65.5	80.0	70.0	50.0	46.6	34.8						3.5
4.0	72.7	72.4	73.1	73.6	42.8	72.8	73.7	50.1	46.0	31.0	47.4	33.0	27.3	61.4	72.0	70.0	50.0	46.6	33.0						4.0
4.5	65.5	65.2	65.9	66.5	40.7	65.6	66.7	47.1	44.0	29.3	44.6	30.7	25.5	57.9	64.7	66.4	50.0	45.7	31.1	54.3	50.0	42.4	26.7	32.0	4.5
5.0	59.1	58.8	59.5	60.1	38.8	59.2	60.3	44.5	42.1	27.7	42.1	28.7	23.9	54.7	58.3	60.0	50.0	44.0	29.4	51.3	50.0	42.4	25.6	30.4	5.0
6.0	42.2	41.7	42.8	43.7	35.5	42.3	44.0	40.1	38.5	25.0	37.9	25.4	21.2	43.0	40.9	43.5	45.7	41.0	26.5	43.0	45.0	42.4	23.3	26.8	6.0
7.0	31.2	30.7	31.7	32.5	32.8	31.3	32.7	33.2	35.1	22.7	33.3	22.8	19.0	31.8	30.0	32.3	34.2	35.5	24.1	31.8	33.6	35.3	21.2	24.0	7.0
8.0	24.2	23.7	24.6	25.3	26.6	24.2	25.5	26.0	27.8	20.9	26.1	20.6	17.3	24.7	23.1	25.2	26.9	28.1	22.1	24.7	26.3	27.9	19.4	21.7	8.0
9.0	19.3	18.8	19.7	20.4	21.6	19.4	20.6	21.0	22.7	19.2	21.1	18.8	15.8	19.8	18.3	20.3	21.8	23.0	20.4	19.8	21.3	22.8	17.8	19.7	9.0
10.0	15.8	15.3	16.1	16.8	17.9	15.8	17.0	17.4	18.9	17.6	17.4	17.2	14.5	16.2	14.8	16.6	18.1	19.2	19.0	16.2	17.7	19.0	16.5	18.1	10.0
11.0		12.6	13.4	14.0	15.0	13.1	14.2	14.6	16.0	16.1	14.6	15.6	13.5	13.5	12.1	13.9	15.3	16.3	17.0	13.5	14.8	16.2	15.3	16.3	11.0
12.0		10.5	11.2	11.8	12.8	10.9	12.0	12.4	13.8	13.9	12.4	13.3	12.5	11.3	10.0	11.7	13.1	14.1	14.7	11.3	12.6	13.9	14.2	14.0	12.0
14.0		7.3	8.0	8.6	9.5	7.8	8.8	9.1	10.5	10.5	9.2	10.0	10.7	8.1	6.9	8.5	9.8	10.7	11.3	8.1	9.3	10.6	11.6	10.7	14.0
16.0						5.6	6.5	6.8	8.1	8.2	6.9	7.7	8.3	5.9	4.7	6.2	7.5	8.4	9.0	5.9	7.0	8.2	9.2	8.3	16.0
18.0						3.9	4.9	5.2	6.4	6.4	5.2	6.0	6.6	4.3	3.1	4.6	5.8	6.6	7.2	4.2	5.3	6.5	7.4	6.6	18.0
20.0																3.3	4.4	5.3	5.8	2.9	4.0	5.1	6.0	5.2	20.0
22.0																2.3	3.4	4.3	4.8	1.9	3.0	4.1	5.0	4.2	22.0
24.0																				1.1	2.2	3.3	4.1	3.3	24.0
26.0																					1.5	2.6	3.4	2.6	26.0
28.0																								2.0	28.0
30.0																									30.0
32.0																									32.0
34.0																									34.0
36.0																									36.0
38.0																									38.0
40.0																									40.0
42.0																									42.0
44.0																									44.0
46.0																									46.0
48.0																									48.0
50.0																									50.0
52.0																									52.0
54.0																									54.0
56.0																									56.0
1	0	46	0	0	0	46	0	0	0	0	0	0	0	0	100	46	0	0	0	92	46	0	0	0	1
2	0	0	46	0	0	46	46	0	0	0	0	0	0	100	0	46	46	0	0	46	46	46	0	0	2
3	0	0	0	46	0	0	46	92	0	0	100	0	0	0	0	46	46	46	0	46	46	46	0	100	3
4	0	0	0	0	0	0	0	0	46	0	0	100	0	0	0	0	46	46	46	0	46	46	92	100	4
5	0	0	0	0	46	0	0	0	46	92	0	0	100	0	0	0	0	46	92	0	0	46	92	0	5
ID	1	68	71 (76)	64 (67)	2 (32)	76	65 (67)	74	25 (38)	3 (24)	75	60 (63)	4 (16)	73	70	66	53 (55)	33 (42)	17 (24)	67	54	39 (50)	18 (24)	63	ID
t	31.9	27.3	32.7	34.4	34.5	30.4	31.9	23.3	33.3	27.8	24.7	22.9	22.9	24.2	22.8	30.0	32.1	32.3	32.2	26.5	29.9	30.7	26.7	24.2	t
[DEG]	0~85	0~85	0~85	0~85	0~85	0~85	0~85	0~85	0~85	0~85	0~85	0~85	0~85	0~85	0~85	0~85	0~85	0~85	0~85	23~85	0~85	0~85	0~85	0~85	[DEG]
	20	11	11	11	6	11	11	7	6	5	7	5	4	9	11	9	6	6	5	7	6	6	4	4	
	100t×2	100t	100t	100t	60t	100t	100t	60t	60t	60t	60t	60t	60t	100t	100t	100t	60t	60t	60t	100t	60t	60t	60t	60t	

m	31.7	34.4	34.4	34.4	34.4	38.7	38.7	38.7	43.0	43.0	43.0	43.0	47.4	47.4	47.4	51.7	51.7	56.0	60.0						m
2.5																									2.5
3.0																									3.0
3.5																									3.5
4.0																									4.0
4.5																									4.5
5.0	30.0	44.0	38.0	29.5	25.2																				5.0
6.0	27.4	42.3	38.0	28.8	23.6	32.8	27.4	20.5																	6.0
7.0	25.0	32.9	34.7	26.8	22.1	32.8	27.0	20.5	27.1	23.1	20.7	19.0													7.0
8.0	22.9	25.7	27.4	24.9	20.5	26.8	25.7	20.1	26.8	23.1	20.6	19.0	21.4	18.6	15.7										8.0
9.0	21.2	20.7	22.3	23.3	19.1	21.8	23.1	18.5	21.8	22.6	19.6	18.6	21.4	18.6	15.7	16.6	14.3								9.0
10.0	18.9	17.1	18.6	19.9	17.8	18.1	19.3	17.2	18.0	18.8	18.7	17.8	18.4	18.6	15.7	16.6	14.3	13.2							10.0
11.0	16.1	14.3	15.7	17.0	16.6	15.2	16.4	16.0	15.2	15.9	16.8	16.9	15.6	16.4	15.7	16.0	14.3	13.2	10.6						11.0
12.0	13.8	12.1	13.5	14.7	15.3	13.0	14.1	14.9	13.0	13.7	14.6	15.1	13.3	14.1	14.9	13.8	14.3	13.2	10.6						12.0
14.0	10.5	8.8	10.1	11.3	11.9	9.7	10.8	11.7	9.7	10.3	11.2	11.7	10.0	10.7	11.5	10.4	11.2	10.8	10.6						14.0
16.0	8.1	6.6	7.8	8.9	9.4	7.4	8.4	9.3	7.4	8.0	8.8	9.3	7.6	8.4	9.1	8.1	8.8	8.4	8.5						16.0
18.0	6.4	4.9	6.1	7.1	7.7	5.7	6.7	7.6	5.6	6.3	7.0	7.5	5.9	6.6	7.3	6.3	7.1	6.7	6.7						18.0
20.0	5.0	3.6	4.8	5.8	6.3	4.3	5.3	6.2	4.3	4.9	5.7	6.1	4.6	5.3	5.9	5.0	5.7	5.3	5.4						20.0
22.0	4.0	2.5	3.7	4.7	5.2	3.3	4.3	5.1	3.3	3.9	4.6	5.0	3.5	4.2	4.9	3.9	4.6	4.2	4.3						22.0
24.0	3.1	1.7	2.8	3.8	4.3	2.4	3.4	4.2	2.4	3.0	3.7	4.2	2.7	3.3	4.0	3.0	3.7	3.4	3.4						24.0
26.0	2.4	1.0	2.1	3.1	3.6	1.7	2.7	3.5	1.7	2.3	3.0	3.4	1.9	2.6	3.2	2.3	3.0	2.6	2.7						26.0
28.0	1.8		1.6	2.5	3.0	1.1	2.1	2.9		1.7	2.4	2.8	1.4	2.0	2.6	1.7	2.4	2.0	2.1						28.0
30.0			1.1	2.0	2.5		1.6	2.3		1.2	1.9	2.3		1.5	2.1		1.9	1.5	1.5						30.0
32.0							1.1	1.9			1.4	1.8		1.0	1.6		1.4								32.0
34.0								1.5			1.0	1.4			1.2		1.0								34.0
36.0												1.1													36.0
38.0																									38.0
40.0																									40.0
42.0																									42.0
44.0																									44.0
46.0																									46.0
48.0																									48.0
50.0																									50.0
52.0																									52.0
54.0																									54.0
56.0																									56.0
1	0	92	46	0	0	92	46	0	92	92	46	0	92	46	0	92	46	92	100						1
2	100	46	46	46	0	46	46	0	92	46	46	46	92	92	92	92	92	92	100						2
3	0	46	46	46	46	46	46	92	46	46	46	92	92	92	92	92	92	92	100						3
4	0	46	46	46	92	46	46	92	46	46	92	92	46	92	92	92	92	92	100						4
5	100	0	46	92	92	46	92	92	46	92	92	92	46	46	92	46	92	92	100						5
ID	58	55	49	44 (46)	19(24)	50	45	20 (24)	42	46	48	21	38	31	22 (24)	32	23	24	16						ID
t	22.8	26.5	28.8	29.5	25.2	27.1	27.4	20.5	26.6	23.1	20.7	19.0	21.4	18.6	15.7	16.6	14.3	13.2	10.6						t
[DEG]	0~85	23~85	0~85	0~85	0~85	31~85	0~85	0~85	40~85	30~85	0~85	0~85	44~85	35~85	24~85	48~85	38~85	50~85	55~85						[DEG]
	4	6	5	4	3	4	4	3	4	3	3	3	3	3	2	2	2	2	2						
	60t	60t	60t	60t	26t	60t	60t	26t	60t	26t	26t	26t	26t	26t	26t	26t	26t	26t	26t						

ブーム

MB		15.4t	8.0m x 4.1m	0 °	JPN

m	12.8																								m
2.5	117.5																								2.5
3.0	105.2																								3.0
3.5	95.1																								3.5
4.0	86.7																								4.0
4.5	79.5																								4.5
5.0	73.4																								5.0
6.0	63.3																								6.0
7.0	55.5																								7.0
8.0	44.1																								8.0
9.0	35.3																								9.0
10.0	29.1																								10.0
11.0																									11.0
12.0																									12.0
14.0																									14.0
16.0																									16.0
18.0																									18.0
20.0																									20.0
22.0																									22.0
24.0																									24.0
26.0																									26.0
28.0																									28.0
30.0																									30.0
32.0																									32.0
34.0																									34.0
36.0																									36.0
38.0																									38.0
40.0																									40.0
42.0																									42.0
44.0																									44.0
46.0																									46.0
48.0																									48.0
50.0																									50.0
52.0																									52.0
54.0																									54.0
56.0																									56.0
1	0																								1
2	0																								2
3	0																								3
4	0																								4
5	0																								5
ID	1																								ID
t	31.9																								t
[DEG]	0~85																								[DEG]
	20																								
	100t×2																								

MB		15.4 t	8.0m x 4.1m	360 °	JPN

m	12.8	17.1	17.1	17.1	17.1	21.4	21.4	21.4	21.4	21.4	22.2	22.2	22.2	22.3	22.3	25.8	25.8	25.8	25.8	30.1	30.1	30.1	30.1	31.6	m
2.5	95.6																								2.5
3.0	84.1	83.8	84.5	85.0	46.6	84.2	85.1	57.2	46.6	35.3	54.0	38.6	31.8	70.1	83.3										3.0
3.5	74.7	74.4	75.1	75.6	45.2	74.8	75.8	53.4	46.6	33.0	50.5	35.5	29.4	65.5	74.0	70.0	50.0	46.6	34.8						3.5
4.0	66.9	66.6	67.3	67.8	42.8	67.0	68.0	50.1	46.0	31.0	47.4	33.0	27.3	61.4	66.2	67.7	50.0	46.6	33.0						4.0
4.5	55.2	54.6	55.9	56.9	40.7	55.3	57.2	47.1	44.0	29.3	44.6	30.7	25.5	56.1	53.7	56.7	50.0	45.7	31.1	54.3	50.0	42.4	26.7	32.0	4.5
5.0	44.5	44.0	45.2	46.1	38.8	44.7	46.4	44.5	42.1	27.7	42.1	28.7	23.9	45.3	43.2	45.9	48.1	44.0	29.4	45.4	47.4	42.4	25.6	30.4	5.0
6.0	31.4	30.9	31.9	32.7	34.1	31.5	32.9	33.5	35.4	25.0	33.5	25.4	21.2	32.0	30.2	32.5	34.4	35.8	26.5	32.1	33.8	35.5	23.3	26.8	6.0
7.0	23.5	23.1	24.0	24.7	26.0	23.6	24.9	25.4	27.1	22.7	25.5	22.8	19.0	24.1	22.5	24.6	26.3	27.5	24.1	24.1	25.7	27.3	21.2	24.0	7.0
8.0	18.3	17.9	18.7	19.4	20.6	18.4	19.6	20.1	21.7	20.9	20.1	20.6	17.3	18.9	17.3	19.3	20.9	22.0	22.1	18.9	20.4	21.8	19.4	21.7	8.0
9.0	14.7	14.2	15.0	15.6	16.7	14.7	15.8	16.2	17.8	17.9	16.3	17.3	15.8	15.1	13.7	15.5	17.0	18.1	18.7	15.1	16.5	17.9	17.8	18.0	9.0
10.0	11.9	11.4	12.2	12.8	13.9	11.9	13.0	13.4	14.8	14.9	13.4	14.4	14.5	12.3	10.9	12.7	14.1	15.1	15.8	12.3	13.7	15.0	16.0	15.1	10.0
11.0		9.3	10.0	10.6	11.6	9.8	10.8	11.2	12.6	12.7	11.2	12.1	12.8	10.1	8.8	10.5	11.9	12.9	13.5	10.1	11.4	12.7	13.7	12.8	11.0
12.0		7.6	8.3	8.9	9.8	8.0	9.1	9.4	10.8	10.8	9.5	10.3	11.0	8.4	7.1	8.8	10.1	11.0	11.7	8.4	9.7	10.9	11.9	11.0	12.0
14.0		5.1	5.7	6.3	7.2	5.5	6.5	6.8	8.1	8.1	6.8	7.6	8.3	5.8	4.6	6.2	7.4	8.3	8.9	5.8	7.0	8.2	9.1	8.3	14.0
16.0						3.7	4.6	4.9	6.1	6.2	4.9	5.7	6.4	4.0	2.8	4.3	5.5	6.4	7.0	4.0	5.1	6.2	7.2	6.3	16.0
18.0						2.3	3.3	3.5	4.7	4.8	3.6	4.3	4.9	2.6	1.5	2.9	4.1	5.0	5.5	2.6	3.7	4.8	5.7	4.9	18.0
20.0																1.9	3.0	3.8	4.4	1.5	2.6	3.7	4.6	3.8	20.0
22.0																1.1	2.1	3.0	3.5		1.7	2.8	3.6	2.9	22.0
24.0																					1.0	2.1	2.9	2.1	24.0
26.0																						1.5	2.3	1.5	26.0
28.0																								1.1	28.0
30.0																									30.0
32.0																									32.0
34.0																									34.0
36.0																									36.0
38.0																									38.0
40.0																									40.0
42.0																									42.0
44.0																									44.0
46.0																									46.0
48.0																									48.0
50.0																									50.0
52.0																									52.0
54.0																									54.0
56.0																									56.0
1	0	46	0	0	0	46	0	0	0	0	0	0	0	0	100	46	0	0	0	92	46	0	0	0	1
2	0	0	46	0	0	46	46	0	0	0	0	0	0	100	0	46	46	0	0	46	46	46	0	0	2
3	0	0	0	46	0	0	46	92	0	0	100	0	0	0	0	46	46	46	0	46	46	46	0	100	3
4	0	0	0	0	0	0	0	0	46	0	0	100	0	0	0	0	46	46	46	0	46	46	92	100	4
5	0	0	0	0	46	0	0	0	46	92	0	0	100	0	0	0	0	46	92	0	0	46	92	0	5
ID	1	68	71 (76)	64 (67)	2 (32)	76	65 (67)	74	25 (38)	3 (24)	75	60 (63)	4 (16)	73	70	66	53 (55)	33 (42)	17 (24)	67	54	39 (50)	18 (24)	63	ID
t	31.9	27.3	32.7	34.4	34.5	30.4	31.9	23.3	33.3	27.8	24.7	22.9	22.9	24.2	22.8	30.0	32.1	32.3	32.2	26.5	29.9	30.7	26.7	24.2	t
[DEG]	0~85	0~85	0~85	0~85	0~85	0~85	0~85	0~85	0~85	0~85	0~85	0~85	0~85	0~85	0~85	0~85	0~85	0~85	0~85	32~85	0~85	0~85	0~85	0~85	[DEG]
	20	11	11	11	6	11	11	7	6	5	7	5	4	9	11	9	6	6	5	7	6	6	4	4	
	100t×2	100t	100t	100t	60t	100t	100t	60t	60t	60t	60t	60t	60t	100t	100t	100t	60t	60t	60t	100t	60t	60t	60t	60t	

m	31.7	34.4	34.4	34.4	34.4	38.7	38.7	38.7	43.0	43.0	43.0	43.0	47.4	47.4	47.4	51.7	51.7	56.0	60.0						m
2.5																									2.5
3.0																									3.0
3.5																									3.5
4.0																									4.0
4.5																									4.5
5.0	30.0	44.0	38.0	29.5	25.2																				5.0
6.0	27.4	33.1	35.0	28.8	23.6	32.8	27.4	20.5																	6.0
7.0	25.0	25.1	26.8	26.8	22.1	26.2	27.0	20.5	26.2	23.1	20.7	19.0													7.0
8.0	21.7	19.7	21.3	22.7	20.5	20.8	22.1	20.1	20.8	21.6	20.6	19.0	21.1	18.6	15.7										8.0
9.0	17.8	16.0	17.4	18.7	19.1	16.9	18.1	18.5	16.9	17.7	18.6	18.6	17.3	18.1	15.7	16.6	14.3								9.0
10.0	14.9	13.1	14.5	15.7	16.4	14.0	15.2	16.2	14.0	14.8	15.6	16.2	14.4	15.2	15.7	14.8	14.3	13.2							10.0
11.0	12.6	10.9	12.3	13.4	14.0	11.8	12.9	13.9	11.8	12.5	13.3	13.9	12.1	12.9	13.7	12.6	13.4	13.0	10.6						11.0
12.0	10.8	9.1	10.5	11.6	12.2	10.0	11.1	12.1	10.0	10.7	11.5	12.0	10.3	11.1	11.8	10.7	11.6	11.1	10.6						12.0
14.0	8.1	6.5	7.8	8.9	9.4	7.3	8.4	9.3	7.3	8.0	8.8	9.2	7.6	8.3	9.1	8.0	8.8	8.4	8.4						14.0
16.0	6.1	4.6	5.8	6.9	7.4	5.4	6.4	7.3	5.4	6.0	6.8	7.3	5.7	6.4	7.1	6.1	6.9	6.5	6.5						16.0
18.0	4.7	3.2	4.4	5.4	6.0	4.0	5.0	5.8	4.0	4.6	5.3	5.8	4.3	4.9	5.6	4.6	5.4	5.0	5.0						18.0
20.0	3.6	2.2	3.3	4.3	4.8	2.9	3.9	4.7	2.9	3.5	4.2	4.6	3.1	3.8	4.5	3.5	4.2	3.9	3.9						20.0
22.0	2.7	1.3	2.4	3.4	3.9	2.0	3.0	3.8	2.0	2.6	3.3	3.7	2.2	2.9	3.6	2.6	3.3	3.0	3.0						22.0
24.0	2.0		1.7	2.7	3.1	1.3	2.2	3.0		1.8	2.5	3.0	1.5	2.2	2.8	1.9	2.6	2.2	2.2						24.0
26.0	1.4		1.1	2.1	2.5		1.6	2.4		1.2	1.9	2.4		1.6	2.2		2.0	1.6							26.0
28.0				1.5	2.0		1.1	1.9			1.4	1.8			1.7		1.4								28.0
30.0				1.1	1.6			1.5			1.0	1.4			1.2										30.0
32.0								1.1				1.0													32.0
34.0																									34.0
36.0																									36.0
38.0																									38.0
40.0																									40.0
42.0																									42.0
44.0																									44.0
46.0																									46.0
48.0																									48.0
50.0																									50.0
52.0																									52.0
54.0																									54.0
56.0																									56.0
1	0	92	46	0	0	92	46	0	92	92	46	0	92	46	0	92	46	92	100						1
2	100	46	46	46	0	46	46	0	92	46	46	46	92	92	92	92	92	92	100						2
3	0	46	46	46	46	46	46	92	46	46	46	92	92	92	92	92	92	92	100						3
4	0	46	46	46	92	46	46	92	46	46	92	92	46	92	92	92	92	92	100						4
5	100	0	46	92	92	46	92	92	46	92	92	92	46	46	92	46	92	92	100						5
ID	58	55	49	44 (46)	19(24)	50	45	20 (24)	42	46	48	21	38	31	22 (24)	32	23	24	16						ID
t	22.8	26.5	28.8	29.5	25.2	27.1	27.4	20.5	26.6	23.1	20.7	19.0	21.4	18.6	15.7	16.6	14.3	13.2	10.6						t
[DEG]	0~85	37~85	31~85	0~85	0~85	41~85	23~85	0~85	47~85	40~85	30~85	35~85	53~85	44~85	39~85	56~85	46~85	57~85	61~85						[DEG]
	4	6	5	4	3	4	4	3	4	3	3	3	3	3	2	2	2	2	2						
	60t	60t	60t	60t	26t	60t	60t	26t	60t	26t	26t	26t	26t	26t	26t	26t	26t	26t	26t						

ブーム

MB		7.1 t	8.0m x 7.5m	0 °	JPN

m	12.8																								m
2.5	115.8																								2.5
3.0	103.7																								3.0
3.5	93.7																								3.5
4.0	85.4																								4.0
4.5	78.3																								4.5
5.0	72.3																								5.0
6.0	62.4																								6.0
7.0	47.2																								7.0
8.0	35.8																								8.0
9.0	28.4																								9.0
10.0	23.2																								10.0
11.0																									11.0
12.0																									12.0
14.0																									14.0
16.0																									16.0
18.0																									18.0
20.0																									20.0
22.0																									22.0
24.0																									24.0
26.0																									26.0
28.0																									28.0
30.0																									30.0
32.0																									32.0
34.0																									34.0
36.0																									36.0
38.0																									38.0
40.0																									40.0
42.0																									42.0
44.0																									44.0
46.0																									46.0
48.0																									48.0
50.0																									50.0
52.0																									52.0
54.0																									54.0
56.0																									56.0
1	0																								1
2	0																								2
3	0																								3
4	0																								4
5	0																								5
ID	1																								ID
t	31.9																								t
[DEG]	0~85																								[DEG]
	20																								
	100t×2																								

MB		7.1 t	8.0m x 7.5m	360 °	JPN

m	12.8	17.1	17.1	17.1	17.1	21.4	21.4	21.4	21.4	21.4	22.2	22.2	22.2	22.3	22.3	25.8	25.8	25.8	25.8	30.1	30.1	30.1	30.1	31.6	m
2.5	111.1																								2.5
3.0	100.5	90.0	90.0	88.0	46.6	90.0	85.7	57.2	46.6	35.3	54.0	38.6	31.8	70.1	84.3										3.0
3.5	90.8	90.0	90.0	84.0	45.2	90.0	80.3	53.4	46.6	33.0	50.5	35.5	29.4	65.5	80.6	70.0	50.0	46.6	34.8						3.5
4.0	82.0	81.7	82.4	79.0	42.8	82.1	75.6	50.1	46.0	31.0	47.4	33.0	27.3	61.4	75.6	70.0	50.0	46.6	33.0						4.0
4.5	73.9	73.6	74.3	74.5	40.7	74.0	71.4	47.1	44.0	29.3	44.6	30.7	25.5	57.9	71.2	70.0	50.0	45.7	31.1	54.3	50.0	42.4	26.7	32.0	4.5
5.0	67.0	66.7	67.4	68.0	38.8	67.1	67.6	44.5	42.1	27.7	42.1	28.7	23.9	54.7	66.2	67.9	50.0	44.0	29.4	51.3	50.0	42.4	25.6	30.4	5.0
6.0	56.0	55.6	56.3	56.9	35.5	56.0	57.1	40.1	38.5	25.0	37.9	25.4	21.2	49.3	55.1	56.8	50.0	41.0	26.5	46.1	50.0	42.4	23.3	26.8	6.0
7.0	47.2	46.6	47.7	48.4	32.8	47.3	48.6	36.5	35.1	22.7	34.5	22.8	19.0	44.8	45.8	48.3	46.6	37.3	24.1	41.8	49.3	39.6	21.2	24.0	7.0
8.0	35.8	35.2	36.3	37.1	30.5	35.9	37.4	33.4	32.3	20.9	31.2	20.6	17.3	36.5	34.6	37.0	38.9	34.3	22.1	36.5	38.3	36.7	19.4	21.7	8.0
9.0	28.1	27.5	28.6	29.4	28.5	28.2	29.7	30.2	29.9	19.2	28.5	18.8	15.8	28.7	26.8	29.3	31.2	31.7	20.4	28.7	30.6	32.2	17.8	19.7	9.0
10.0	22.5	21.9	22.8	23.6	24.9	22.5	23.9	24.4	26.2	17.6	24.4	17.2	14.5	23.0	21.2	23.5	25.3	26.6	19.0	23.0	24.7	26.3	16.5	18.1	10.0
11.0		17.8	18.7	19.4	20.7	18.4	19.7	20.1	21.8	16.3	20.2	15.9	13.5	18.8	17.2	19.3	21.0	22.2	17.7	18.8	20.4	22.0	15.3	16.6	11.0
12.0		14.7	15.6	16.3	17.4	15.2	16.5	16.9	18.5	15.1	17.0	14.8	12.5	15.7	14.1	16.1	17.7	18.9	16.6	15.7	17.2	18.7	14.2	15.4	12.0
14.0		10.4	11.2	11.8	12.8	10.8	12.0	12.4	13.9	13.2	12.4	12.9	11.0	11.3	9.8	11.6	13.1	14.2	14.8	11.2	12.6	14.0	12.3	13.4	14.0
16.0						7.0	9.0	9.3	10.7	10.8	9.4	10.2	9.8	7.7	5.3	8.4	10.0	11.0	11.7	7.7	9.6	10.8	10.9	11.0	16.0
18.0						3.9	5.6	6.0	8.2	8.3	6.1	7.4	8.6	4.4	2.3	5.0	7.1	8.7	9.4	4.3	6.4	8.4	9.6	8.6	18.0
20.0																2.8	4.7	6.1	7.0	2.2	4.1	5.9	7.3	6.0	20.0
22.0																1.4	3.1	4.4	5.2		2.5	4.2	5.5	4.3	22.0
24.0																					1.3	2.9	4.1	3.0	24.0
26.0																						2.0	3.1	2.0	26.0
28.0																								1.3	28.0
30.0																									30.0
32.0																									32.0
34.0																									34.0
36.0																									36.0
38.0																									38.0
40.0																									40.0
42.0																									42.0
44.0																									44.0
46.0																									46.0
48.0																									48.0
50.0																									50.0
52.0																									52.0
54.0																									54.0
56.0																									56.0
1	0	46	0	0	0	46	0	0	0	0	0	0	0	0	100	46	0	0	0	92	46	0	0	0	1
2	0	0	46	0	0	46	46	0	0	0	0	0	0	100	0	46	46	0	0	46	46	46	0	0	2
3	0	0	0	46	0	0	46	92	0	0	100	0	0	0	0	46	46	46	0	46	46	46	0	100	3
4	0	0	0	0	0	0	0	0	46	0	0	100	0	0	0	0	46	46	46	0	46	46	92	100	4
5	0	0	0	0	46	0	0	0	46	92	0	0	100	0	0	0	0	46	92	0	0	46	92	0	5
ID	1	68	71 (76)	64 (67)	2 (32)	76	65 (67)	74	25 (38)	3 (24)	75	60 (63)	4 (16)	73	70	66	53 (55)	33 (42)	17 (24)	67	54	39 (50)	18 (24)	63	ID
t	31.9	27.3	32.7	34.4	34.5	30.4	31.9	23.3	33.3	27.8	24.7	22.9	22.9	24.2	22.8	30.0	32.1	32.3	32.2	26.5	29.9	30.7	26.7	24.2	t
[DEG]	0~85	0~85	0~85	0~85	0~85	0~85	0~85	0~85	0~85	0~85	0~85	0~85	0~85	0~85	0~85	0~85	0~85	0~85	0~85	0~85	0~85	0~85	0~85	0~85	[DEG]
	20	11	11	11	6	11	11	7	6	5	7	5	4	9	11	9	6	6	5	7	6	6	4	4	
	100t×2	100t	100t	100t	60t	100t	100t	60t	60t	60t	60t	60t	60t	100t	100t	100t	60t	60t	60t	100t	60t	60t	60t	60t	

m	31.7	34.4	34.4	34.4	34.4	38.7	38.7	38.7	43.0	43.0	43.0	43.0	47.4	47.4	47.4	51.7	51.7	56.0	60.0						m
2.5																									2.5
3.0																									3.0
3.5																									3.5
4.0																									4.0
4.5																									4.5
5.0	30.0	44.0	38.0	29.5	25.2																				5.0
6.0	27.4	42.3	38.0	28.8	23.6	32.8	27.4	20.5																	6.0
7.0	25.0	38.4	38.0	26.8	22.1	32.8	27.0	20.5	27.1	23.1	20.7	19.0													7.0
8.0	22.9	35.2	38.0	24.9	20.5	32.8	25.7	20.1	27.1	23.1	20.6	19.0	21.4	18.6	15.7										8.0
9.0	21.2	29.8	31.7	23.3	19.1	30.3	24.5	18.5	27.1	23.1	19.6	18.6	21.4	18.6	15.7	16.6	14.3								9.0
10.0	19.6	24.0	25.8	21.9	17.8	25.2	23.2	17.2	25.2	23.1	18.7	17.8	21.4	18.6	15.7	16.6	14.3	13.2							10.0
11.0	18.3	19.8	21.4	20.6	16.6	20.9	21.9	16.0	20.9	21.7	17.9	16.9	21.3	18.6	15.7	16.6	14.3	13.2	10.6						11.0
12.0	17.2	16.6	18.2	19.5	15.6	17.6	18.9	14.9	17.6	18.4	17.1	15.8	18.0	18.4	15.7	16.6	14.3	13.2	10.6						12.0
14.0	13.9	12.1	13.5	14.8	14.0	13.0	14.2	13.2	13.0	13.7	14.7	14.1	13.3	14.2	14.7	13.8	14.3	13.2	10.6						14.0
16.0	10.7	9.0	10.4	11.6	12.2	9.9	11.1	11.8	9.9	10.6	11.5	12.0	10.2	11.0	11.8	10.7	11.5	11.1	10.6						16.0
18.0	8.2	5.5	7.7	9.3	9.9	6.9	8.7	9.8	6.9	8.0	9.2	9.7	7.4	8.6	9.5	8.1	9.2	8.8	8.8						18.0
20.0	5.7	3.3	5.2	6.9	7.8	4.5	6.2	7.6	4.5	5.5	6.7	7.5	4.9	6.1	7.2	5.6	6.8	6.2	6.2						20.0
22.0	4.0	1.8	3.5	5.1	5.9	2.9	4.4	5.7	2.9	3.8	4.9	5.6	3.3	4.3	5.3	3.9	5.0	4.4	4.4						22.0
24.0	2.7		2.3	3.8	4.5	1.7	3.1	4.3	1.7	2.5	3.6	4.2	2.0	3.0	4.0	2.6	3.6	3.1	3.1						24.0
26.0	1.8		1.4	2.8	3.4		2.1	3.3		1.6	2.6	3.2	1.1	2.0	2.9	1.6	2.6	2.1	2.1						26.0
28.0	1.0			2.0	2.6		1.4	2.5			1.8	2.4		1.3	2.1		1.8	1.3	1.4						28.0
30.0				1.4	2.0			1.8			1.1	1.7			1.5		1.2								30.0
32.0								1.3				1.2													32.0
34.0																									34.0
36.0																									36.0
38.0																									38.0
40.0																									40.0
42.0																									42.0
44.0																									44.0
46.0																									46.0
48.0																									48.0
50.0																									50.0
52.0																									52.0
54.0																									54.0
56.0																									56.0
1	0	92	46	0	0	92	46	0	92	92	46	0	92	46	0	92	46	92	100						1
2	100	46	46	46	0	46	46	0	92	46	46	46	92	92	92	92	92	92	100						2
3	0	46	46	46	46	46	46	92	46	46	46	92	92	92	92	92	92	92	100						3
4	0	46	46	46	92	46	46	92	46	46	92	92	46	92	92	92	92	92	100						4
5	100	0	46	92	92	46	92	92	46	92	92	92	46	46	92	46	92	92	100						5
ID	58	55	49	44 (46)	19(24)	50	45	20 (24)	42	46	48	21	38	31	22 (24)	32	23	24	16						ID
t	22.8	26.5	28.8	29.5	25.2	27.1	27.4	20.5	26.6	23.1	20.7	19.0	21.4	18.6	15.7	16.6	14.3	13.2	10.6						t
[DEG]	0~85	0~85	0~85	0~85	0~85	46~85	0~85	0~85	35~85	48~85	0~85	0~85	43~85	35~85	35~85	42~85	38~85	44~85	48~85						[DEG]
	4	6	5	4	3	4	4	3	4	3	3	3	3	3	2	2	2	2	2						
	60t	60t	60t	60t	26t	60t	60t	26t	60t	26t	26t	26t	26t	26t	26t	26t	26t	26t	26t						

ブーム

MB		7.1 t	8.0m x 6.2m	0 °	JPN

m	12.8																								m
2.5	115.8																								2.5
3.0	103.7																								3.0
3.5	93.7																								3.5
4.0	85.4																								4.0
4.5	78.3																								4.5
5.0	72.3																								5.0
6.0	62.4																								6.0
7.0	47.1																								7.0
8.0	35.8																								8.0
9.0	28.4																								9.0
10.0	23.1																								10.0
11.0																									11.0
12.0																									12.0
14.0																									14.0
16.0																									16.0
18.0																									18.0
20.0																									20.0
22.0																									22.0
24.0																									24.0
26.0																									26.0
28.0																									28.0
30.0																									30.0
32.0																									32.0
34.0																									34.0
36.0																									36.0
38.0																									38.0
40.0																									40.0
42.0																									42.0
44.0																									44.0
46.0																									46.0
48.0																									48.0
50.0																									50.0
52.0																									52.0
54.0																									54.0
56.0																									56.0
1	0																								1
2	0																								2
3	0																								3
4	0																								4
5	0																								5
ID	1																								ID
t	31.9																								t
[DEG]	0~85																								[DEG]
	20																								
	100t×2																								

MB		7.1 t	8.0m x 6.2m	360 °	JPN

m	12.8	17.1	17.1	17.1	17.1	21.4	21.4	21.4	21.4	21.4	22.2	22.2	22.2	22.3	22.3	25.8	25.8	25.8	25.8	30.1	30.1	30.1	30.1	31.6	m
2.5	106.3																								2.5
3.0	94.7	90.0	90.0	88.0	46.6	90.0	85.7	57.2	46.6	35.3	54.0	38.6	31.8	70.1	84.3										3.0
3.5	85.0	84.8	85.4	84.0	45.2	85.1	80.3	53.4	46.6	33.0	50.5	35.5	29.4	65.5	80.6	70.0	50.0	46.6	34.8						3.5
4.0	76.2	75.9	76.6	77.2	42.8	76.3	75.6	50.1	46.0	31.0	47.4	33.0	27.3	61.4	75.4	70.0	50.0	46.6	33.0						4.0
4.5	68.4	68.0	68.7	69.3	40.7	68.5	69.5	47.1	44.0	29.3	44.6	30.7	25.5	57.9	67.5	69.2	50.0	45.7	31.1	54.3	50.0	42.4	26.7	32.0	4.5
5.0	61.7	61.4	62.1	62.7	38.8	61.8	62.9	44.5	42.1	27.7	42.1	28.7	23.9	54.7	60.9	62.6	50.0	44.0	29.4	51.3	50.0	42.4	25.6	30.4	5.0
6.0	48.0	47.4	48.7	49.8	35.5	48.2	50.2	40.1	38.5	25.0	37.9	25.4	21.2	49.0	46.5	49.6	50.0	41.0	26.5	46.1	50.0	42.4	23.3	26.8	6.0
7.0	33.8	33.2	34.4	35.3	32.8	33.9	35.6	36.2	35.1	22.7	34.5	22.8	19.0	34.6	32.5	35.1	37.3	37.3	24.1	34.6	36.6	38.6	21.2	24.0	7.0
8.0	25.4	24.9	25.9	26.7	28.1	25.5	27.0	27.5	29.4	20.9	27.6	20.6	17.3	26.1	24.2	26.6	28.5	29.8	22.1	26.1	27.9	29.6	19.4	21.7	8.0
9.0	19.9	19.3	20.3	21.0	22.3	19.9	21.3	21.7	23.5	19.2	21.8	18.8	15.8	20.4	18.7	20.9	22.6	23.9	20.4	20.4	22.1	23.7	17.8	19.7	9.0
10.0	16.0	15.4	16.3	17.0	18.2	16.0	17.2	17.7	19.3	17.6	17.7	17.2	14.5	16.4	14.8	16.9	18.5	19.7	19.0	16.4	18.0	19.5	16.5	18.1	10.0
11.0		12.5	13.3	14.0	15.1	13.0	14.2	14.6	16.2	16.3	14.7	15.7	13.5	13.5	11.9	13.9	15.4	16.5	17.2	13.4	14.9	16.3	15.3	16.5	11.0
12.0		10.2	11.0	11.7	12.7	10.7	11.9	12.3	13.8	13.9	12.3	13.3	12.5	11.1	9.7	11.5	13.0	14.1	14.8	11.1	12.5	13.9	14.2	14.0	12.0
14.0		7.0	7.7	8.3	9.3	7.4	8.5	8.8	10.3	10.3	8.9	9.8	10.5	7.8	6.5	8.2	9.5	10.5	11.2	7.8	9.1	10.4	11.4	10.5	14.0
16.0						5.2	6.2	6.5	7.8	7.9	6.5	7.4	8.1	5.5	4.2	5.9	7.2	8.1	8.7	5.5	6.7	7.9	8.9	8.1	16.0
18.0						3.5	4.5	4.8	6.1	6.1	4.8	5.6	6.3	3.9	2.3	4.2	5.4	6.3	6.9	3.8	5.0	6.2	7.1	6.3	18.0
20.0																2.8	4.1	5.0	5.6	2.2	3.7	4.8	5.7	4.9	20.0
22.0																1.4	3.1	4.0	4.5		2.5	3.8	4.7	3.8	22.0
24.0																					1.3	2.9	3.8	3.0	24.0
26.0																						2.0	3.1	2.0	26.0
28.0																								1.3	28.0
30.0																									30.0
32.0																									32.0
34.0																									34.0
36.0																									36.0
38.0																									38.0
40.0																									40.0
42.0																									42.0
44.0																									44.0
46.0																									46.0
48.0																									48.0
50.0																									50.0
52.0																									52.0
54.0																									54.0
56.0																									56.0
1	0	46	0	0	0	46	0	0	0	0	0	0	0	0	100	46	0	0	0	92	46	0	0	0	1
2	0	0	46	0	0	46	46	0	0	0	0	0	0	100	0	46	46	0	0	46	46	46	0	0	2
3	0	0	0	46	0	0	46	92	0	0	100	0	0	0	0	46	46	46	0	46	46	46	0	100	3
4	0	0	0	0	0	0	0	0	46	0	0	100	0	0	0	0	46	46	46	0	46	46	92	100	4
5	0	0	0	0	46	0	0	0	46	92	0	0	100	0	0	0	0	46	92	0	0	46	92	0	5
ID	1	68	71 (76)	64 (67)	2 (32)	76	65 (67)	74	25 (38)	3 (24)	75	60 (63)	4 (16)	73	70	66	53 (55)	33 (42)	17 (24)	67	54	39 (50)	18 (24)	63	ID
t	31.9	27.3	32.7	34.4	34.5	30.4	31.9	23.3	33.3	27.8	24.7	22.9	22.9	24.2	22.8	30.0	32.1	32.3	32.2	26.5	29.9	30.7	26.7	24.2	t
[DEG]	0~85	0~85	0~85	0~85	0~85	0~85	0~85	0~85	0~85	0~85	0~85	0~85	0~85	0~85	0~85	0~85	0~85	0~85	0~85	23~85	0~85	0~85	0~85	0~85	[DEG]
	20	11	11	11	6	11	11	7	6	5	7	5	4	9	11	9	6	6	5	7	6	6	4	4	
	100t×2	100t	100t	100t	60t	100t	100t	60t	60t	60t	60t	60t	60t	100t	100t	100t	60t	60t	60t	100t	60t	60t	60t	60t	

m	31.7	34.4	34.4	34.4	34.4	38.7	38.7	38.7	43.0	43.0	43.0	43.0	47.4	47.4	47.4	51.7	51.7	56.0	60.0						m
2.5																									2.5
3.0																									3.0
3.5																									3.5
4.0																									4.0
4.5																									4.5
5.0	30.0	44.0	38.0	29.5	25.2																				5.0
6.0	27.4	42.3	38.0	28.8	23.6	32.8	27.4	20.5																	6.0
7.0	25.0	35.8	37.9	26.8	22.1	32.8	27.0	20.5	27.1	23.1	20.7	19.0													7.0
8.0	22.9	27.1	29.0	24.9	20.5	28.4	25.7	20.1	27.1	23.1	20.6	19.0	21.4	18.6	15.7										8.0
9.0	21.2	21.4	23.1	23.3	19.1	22.6	24.0	18.5	22.5	23.1	19.6	18.6	21.4	18.6	15.7	16.6	14.3								9.0
10.0	19.4	17.3	19.0	20.4	17.8	18.4	19.8	17.2	18.4	19.2	18.7	17.8	18.8	18.6	15.7	16.6	14.3	13.2							10.0
11.0	16.2	14.3	15.8	17.2	16.6	15.3	16.6	16.0	15.3	16.1	17.1	16.9	15.7	16.5	15.7	16.2	14.3	13.2	10.6						11.0
12.0	13.8	12.0	13.4	14.7	15.4	12.9	14.2	14.9	12.9	13.7	14.6	15.2	13.3	14.1	15.0	13.7	14.3	13.2	10.6						12.0
14.0	10.3	8.6	9.9	11.1	11.7	9.5	10.6	11.6	9.4	10.1	11.0	11.5	9.8	10.5	11.3	10.2	11.1	10.6	10.6						14.0
16.0	7.8	6.2	7.5	8.7	9.2	7.1	8.2	9.1	7.1	7.7	8.5	9.1	7.4	8.1	8.9	7.8	8.6	8.2	8.2						16.0
18.0	6.1	4.5	5.8	6.9	7.4	5.3	6.4	7.3	5.3	5.9	6.7	7.2	5.6	6.3	7.0	6.0	6.8	6.4	6.4						18.0
20.0	4.7	3.2	4.4	5.5	6.0	4.0	5.0	5.9	4.0	4.6	5.4	5.8	4.2	5.0	5.7	4.6	5.4	5.0	5.0						20.0
22.0	3.7	1.8	3.4	4.4	4.9	2.9	3.9	4.8	2.9	3.5	4.3	4.8	3.2	3.9	4.6	3.6	4.3	3.9	4.0						22.0
24.0	2.7		2.3	3.5	4.0	1.7	3.1	3.9	1.7	2.5	3.4	3.9	2.0	3.0	3.7	2.6	3.4	3.1	3.1						24.0
26.0	1.8		1.4	2.8	3.3		2.1	3.2		1.6	2.6	3.1	1.1	2.0	2.9	1.6	2.6	2.1	2.1						26.0
28.0	1.0			2.0	2.6		1.4	2.5			1.8	2.4		1.3	2.1		1.8	1.3	1.4						28.0
30.0				1.4	2.0			1.8			1.1	1.7			1.5		1.2								30.0
32.0								1.3				1.2													32.0
34.0																									34.0
36.0																									36.0
38.0																									38.0
40.0																									40.0
42.0																									42.0
44.0																									44.0
46.0																									46.0
48.0																									48.0
50.0																									50.0
52.0																									52.0
54.0																									54.0
56.0																									56.0
1	0	92	46	0	0	92	46	0	92	92	46	0	92	46	0	92	46	92	100						1
2	100	46	46	46	0	46	46	0	92	46	46	46	92	92	92	92	92	92	100						2
3	0	46	46	46	46	46	46	92	46	46	46	92	92	92	92	92	92	92	100						3
4	0	46	46	46	92	46	46	92	46	46	92	92	46	92	92	92	92	92	100						4
5	100	0	46	92	92	46	92	92	46	92	92	92	46	46	92	46	92	92	100						5
ID	58	55	49	44 (46)	19(24)	50	45	20 (24)	42	46	48	21	38	31	22 (24)	32	23	24	16						ID
t	22.8	26.5	28.8	29.5	25.2	27.1	27.4	20.5	26.6	23.1	20.7	19.0	21.4	18.6	15.7	16.6	14.3	13.2	10.6						t
[DEG]	0~85	31~85	0~85	0~85	0~85	36~85	0~85	0~85	41~85	35~85	40~85	0~85	48~85	39~85	30~85	51~85	42~85	53~85	57~85						[DEG]
	4	6	5	4	3	4	4	3	4	3	3	3	3	3	2	2	2	2	2						
	60t	60t	60t	60t	26t	60t	60t	26t	60t	26t	26t	26t	26t	26t	26t	26t	26t	26t	26t						

ブーム

MB		7.1 t	8.0m x 5.0m	0 °	JPN

m	12.8																								m
2.5	115.8																								2.5
3.0	103.7																								3.0
3.5	93.7																								3.5
4.0	85.4																								4.0
4.5	78.3																								4.5
5.0	72.3																								5.0
6.0	62.4																								6.0
7.0	47.1																								7.0
8.0	35.7																								8.0
9.0	28.3																								9.0
10.0	23.1																								10.0
11.0																									11.0
12.0																									12.0
14.0																									14.0
16.0																									16.0
18.0																									18.0
20.0																									20.0
22.0																									22.0
24.0																									24.0
26.0																									26.0
28.0																									28.0
30.0																									30.0
32.0																									32.0
34.0																									34.0
36.0																									36.0
38.0																									38.0
40.0																									40.0
42.0																									42.0
44.0																									44.0
46.0																									46.0
48.0																									48.0
50.0																									50.0
52.0																									52.0
54.0																									54.0
56.0																									56.0
1	0																								1
2	0																								2
3	0																								3
4	0																								4
5	0																								5
ID	1																								ID
t	31.9																								t
[DEG]	0~85																								[DEG]
	20																								
	100t×2																								

MB		7.1 t	8.0m x 5.0m	360 °	JPN

m	12.8	17.1	17.1	17.1	17.1	21.4	21.4	21.4	21.4	21.4	22.2	22.2	22.2	22.3	22.3	25.8	25.8	25.8	25.8	30.1	30.1	30.1	30.1	31.6	m
2.5	99.2																								2.5
3.0	87.7	87.4	88.0	88.0	46.6	87.8	85.7	57.2	46.6	35.3	54.0	38.6	31.8	70.1	84.3										3.0
3.5	78.2	77.9	78.5	79.0	45.2	78.3	79.2	53.4	46.6	33.0	50.5	35.5	29.4	65.5	77.4	70.0	50.0	46.6	34.8						3.5
4.0	69.3	69.0	69.7	70.3	42.8	69.4	70.5	50.1	46.0	31.0	47.4	33.0	27.3	61.4	68.5	70.0	50.0	46.6	33.0						4.0
4.5	61.3	60.6	62.1	62.8	40.7	61.5	63.0	47.1	44.0	29.3	44.6	30.7	25.5	57.9	59.5	62.7	50.0	45.7	31.1	54.3	50.0	42.4	26.7	32.0	4.5
5.0	47.5	46.9	48.3	49.3	38.8	47.7	49.7	44.5	42.1	27.7	42.1	28.7	23.9	48.5	46.0	49.2	50.0	44.0	29.4	48.5	50.0	42.4	25.6	30.4	5.0
6.0	31.8	31.3	32.4	33.3	34.9	31.9	33.6	34.2	36.3	25.0	34.3	25.4	21.2	32.6	30.5	33.1	35.3	36.8	26.5	32.6	34.6	36.5	23.3	26.8	6.0
7.0	23.1	22.6	23.6	24.4	25.8	23.2	24.6	25.2	27.0	22.7	25.2	22.8	19.0	23.7	21.9	24.2	26.1	27.4	24.1	23.8	25.5	27.2	21.2	24.0	7.0
8.0	17.6	17.1	18.0	18.7	20.0	17.6	18.9	19.4	21.1	20.9	19.5	20.6	17.3	18.1	16.5	18.6	20.3	21.5	22.1	18.1	19.7	21.3	19.4	21.4	8.0
9.0	13.7	13.2	14.1	14.8	16.0	13.8	15.0	15.4	17.0	17.2	15.5	16.5	15.8	14.2	12.7	14.7	16.2	17.4	18.1	14.2	15.7	17.2	17.8	17.3	9.0
10.0	10.9	10.4	11.3	11.9	13.0	10.9	12.1	12.5	14.0	14.1	12.6	13.5	14.3	11.4	9.9	11.8	13.3	14.4	15.1	11.4	12.8	14.2	15.3	14.3	10.0
11.0		8.3	9.1	9.7	10.8	8.8	9.9	10.3	11.8	11.8	10.3	11.3	12.0	9.2	7.8	9.6	11.0	12.1	12.7	9.2	10.6	11.9	13.0	12.0	11.0
12.0		6.6	7.4	8.0	9.0	7.1	8.2	8.5	10.0	10.0	8.6	9.5	10.2	7.5	6.1	7.9	9.2	10.2	10.9	7.5	8.8	10.1	11.1	10.2	12.0
14.0		4.2	4.9	5.4	6.4	4.6	5.6	5.9	7.3	7.4	6.0	6.8	7.5	5.0	3.7	5.3	6.6	7.6	8.2	4.9	6.2	7.4	8.4	7.5	14.0
16.0						2.9	3.8	4.1	5.4	5.5	4.2	5.0	5.6	3.2	2.0	3.5	4.8	5.7	6.3	3.2	4.4	5.5	6.5	5.6	16.0
18.0						1.6	2.6	2.8	4.0	4.1	2.8	3.6	4.2	1.9		2.2	3.4	4.3	4.8	1.8	3.0	4.1	5.0	4.2	18.0
20.0																1.2	2.4	3.2	3.8		2.0	3.1	3.9	3.1	20.0
22.0																	1.5	2.4	2.9		1.1	2.2	3.1	2.3	22.0
24.0																						1.6	2.4	1.6	24.0
26.0																						1.0	1.8	1.0	26.0
28.0																									28.0
30.0																									30.0
32.0																									32.0
34.0																									34.0
36.0																									36.0
38.0																									38.0
40.0																									40.0
42.0																									42.0
44.0																									44.0
46.0																									46.0
48.0																									48.0
50.0																									50.0
52.0																									52.0
54.0																									54.0
56.0																									56.0
1	0	46	0	0	0	46	0	0	0	0	0	0	0	0	100	46	0	0	0	92	46	0	0	0	1
2	0	0	46	0	0	46	46	0	0	0	0	0	0	100	0	46	46	0	0	46	46	46	0	0	2
3	0	0	0	46	0	0	46	92	0	0	100	0	0	0	0	46	46	46	0	46	46	46	0	100	3
4	0	0	0	0	0	0	0	0	46	0	0	100	0	0	0	0	46	46	46	0	46	46	92	100	4
5	0	0	0	0	46	0	0	0	46	92	0	0	100	0	0	0	0	46	92	0	0	46	92	0	5
ID	1	68	71 (76)	64 (67)	2 (32)	76	65 (67)	74	25 (38)	3 (24)	75	60 (63)	4 (16)	73	70	66	53 (55)	33 (42)	17 (24)	67	54	39 (50)	18 (24)	63	ID
t	31.9	27.3	32.7	34.4	34.5	30.4	31.9	23.3	33.3	27.8	24.7	22.9	22.9	24.2	22.8	30.0	32.1	32.3	32.2	26.5	29.9	30.7	26.7	24.2	t
[DEG]	0~85	0~85	0~85	0~85	0~85	0~85	0~85	0~85	0~85	0~85	0~85	0~85	0~85	0~85	0~85	0~85	0~85	0~85	0~85	39~85	23~85	0~85	0~85	0~85	[DEG]
	20	11	11	11	6	11	11	7	6	5	7	5	4	9	11	9	6	6	5	7	6	6	4	4	
	100t×2	100t	100t	100t	60t	100t	100t	60t	60t	60t	60t	60t	60t	100t	100t	100t	60t	60t	60t	100t	60t	60t	60t	60t	

m	31.7	34.4	34.4	34.4	34.4	38.7	38.7	38.7	43.0	43.0	43.0	43.0	47.4	47.4	47.4	51.7	51.7	56.0	60.0	m
2.5																				2.5
3.0																				3.0
3.5																				3.5
4.0																				4.0
4.5																				4.5
5.0	30.0	44.0	38.0	29.5	25.2															5.0
6.0	27.4	33.8	35.9	28.8	23.6	32.8	27.4	20.5												6.0
7.0	25.0	24.8	26.6	26.8	22.1	26.0	27.0	20.5	26.0	23.1	20.7	19.0								7.0
8.0	21.2	19.1	20.8	22.2	20.5	20.2	21.6	20.1	20.2	21.0	20.6	19.0	20.6	18.6	15.7					8.0
9.0	17.1	15.1	16.7	18.1	18.8	16.2	17.5	18.5	16.2	17.0	17.9	18.5	16.5	17.4	15.7	16.6	14.3			9.0
10.0	14.1	12.2	13.7	15.0	15.7	13.2	14.4	15.5	13.2	14.0	14.9	15.5	13.5	14.4	15.3	14.0	14.3	13.2		10.0
11.0	11.8	10.0	11.4	12.7	13.3	10.9	12.1	13.2	10.9	11.7	12.6	13.1	11.3	12.1	12.9	11.7	12.6	12.2	10.6	11.0
12.0	10.0	8.3	9.6	10.8	11.4	9.2	10.3	11.3	9.2	9.9	10.7	11.3	9.5	10.3	11.1	9.9	10.8	10.3	10.4	12.0
14.0	7.3	5.7	7.0	8.1	8.7	6.5	7.6	8.6	6.5	7.2	8.0	8.5	6.8	7.6	8.3	7.3	8.1	7.6	7.7	14.0
16.0	5.4	3.9	5.1	6.2	6.8	4.7	5.7	6.6	4.7	5.3	6.1	6.6	5.0	5.7	6.4	5.4	6.1	5.7	5.8	16.0
18.0	4.0	2.5	3.7	4.8	5.3	3.3	4.3	5.2	3.3	3.9	4.7	5.1	3.6	4.3	5.0	4.0	4.7	4.3	4.4	18.0
20.0	3.0	1.5	2.7	3.7	4.2	2.3	3.2	4.1	2.2	2.8	3.6	4.0	2.5	3.2	3.9	2.9	3.6	3.2	3.3	20.0
22.0	2.1		1.8	2.8	3.3	1.4	2.4	3.2		2.0	2.7	3.2		2.3	3.0	2.0	2.8	2.4	2.4	22.0
24.0	1.4		1.2	2.1	2.6		1.7	2.5			2.0	2.5		1.6	2.3		2.1			24.0
26.0				1.6	2.0		1.1	1.9			1.4	1.9			1.7		1.5			26.0
28.0				1.1	1.5			1.4				1.4			1.2					28.0
30.0					1.1			1.0				1.0								30.0
32.0																				32.0
34.0																				34.0
36.0																				36.0
38.0																				38.0
40.0																				40.0
42.0																				42.0
44.0																				44.0
46.0																				46.0
48.0																				48.0
50.0																				50.0
52.0																				52.0
54.0																				54.0
56.0																				56.0
1	0	92	46	0	0	92	46	0	92	92	46	0	92	46	0	92	46	92	100	1
2	100	46	46	46	0	46	46	0	92	46	46	46	92	92	92	92	92	92	100	2
3	0	46	46	46	46	46	46	92	46	46	46	92	92	92	92	92	92	92	100	3
4	0	46	46	46	92	46	46	92	46	46	92	92	46	92	92	92	92	92	100	4
5	100	0	46	92	92	46	92	92	46	92	92	92	46	46	92	46	92	92	100	5
ID	58	55	49	44 (46)	19(24)	50	45	20 (24)	42	46	48	21	38	31	22 (24)	32	23	24	16	ID
t	22.8	26.5	28.8	29.5	25.2	27.1	27.4	20.5	26.6	23.1	20.7	19.0	21.4	18.6	15.7	16.6	14.3	13.2	10.6	t
[DEG]	0~85	42~85	31~85	0~85	0~85	44~85	30~85	0~85	53~85	47~85	40~85	30~85	57~85	50~85	41~85	60~85	52~85	61~85	65~85	[DEG]
	4	6	5	4	3	4	4	3	4	3	3	3	3	3	2	2	2	2	2	
	60t	60t	60t	60t	26t	60t	60t	26t	60t	26t	26t	26t	26t	26t	26t	26t	26t	26t	26t	

ブーム

MB		7.1 t	8.0m x 4.1m	0 °	JPN

m	12.8																								m
2.5	115.8																								2.5
3.0	103.7																								3.0
3.5	93.7																								3.5
4.0	85.4																								4.0
4.5	78.3																								4.5
5.0	72.3																								5.0
6.0	62.4																								6.0
7.0	47.0																								7.0
8.0	35.7																								8.0
9.0	28.3																								9.0
10.0	23.1																								10.0
11.0																									11.0
12.0																									12.0
14.0																									14.0
16.0																									16.0
18.0																									18.0
20.0																									20.0
22.0																									22.0
24.0																									24.0
26.0																									26.0
28.0																									28.0
30.0																									30.0
32.0																									32.0
34.0																									34.0
36.0																									36.0
38.0																									38.0
40.0																									40.0
42.0																									42.0
44.0																									44.0
46.0																									46.0
48.0																									48.0
50.0																									50.0
52.0																									52.0
54.0																									54.0
56.0																									56.0
1	0																								1
2	0																								2
3	0																								3
4	0																								4
5	0																								5
ID	1																								ID
t	31.9																								t
[DEG]	0~85																								[DEG]
	20																								
	100t×2																								

MB		7.1 t	8.0m x 4.1m	360 °	JPN

m	12.8	17.1	17.1	17.1	17.1	21.4	21.4	21.4	21.4	21.4	22.2	22.2	22.2	22.3	22.3	25.8	25.8	25.8	25.8	30.1	30.1	30.1	30.1	31.6	m
2.5	92.3																								2.5
3.0	80.9	80.6	81.3	81.8	46.6	81.0	82.0	57.2	46.6	35.3	54.0	38.6	31.8	70.1	80.2										3.0
3.5	71.5	71.1	71.9	72.5	45.2	71.6	72.7	53.4	46.6	33.0	50.5	35.5	29.4	65.5	70.6	70.0	50.0	46.6	34.8						3.5
4.0	54.0	53.3	54.8	56.0	42.8	54.2	56.4	50.1	46.0	31.0	47.4	33.0	27.3	55.1	52.3	55.8	50.0	46.6	33.0						4.0
4.5	41.5	40.9	42.2	43.2	40.7	41.6	43.5	44.2	44.0	29.3	44.3	30.7	25.5	42.4	40.0	43.0	45.5	45.7	31.1	42.4	44.7	42.4	26.7	32.0	4.5
5.0	33.2	32.6	33.8	34.7	36.4	33.3	35.0	35.6	37.8	27.7	35.7	28.7	23.9	34.0	31.8	34.5	36.7	38.3	29.4	34.0	36.0	38.0	25.6	30.4	5.0
6.0	22.9	22.4	23.4	24.2	25.6	23.0	24.4	25.0	26.9	25.0	25.0	25.4	21.2	23.6	21.7	24.0	25.9	27.3	26.5	23.6	25.3	27.0	23.3	26.8	6.0
7.0	16.7	16.3	17.2	17.9	19.2	16.8	18.1	18.6	20.3	20.5	18.7	19.8	19.0	17.3	15.7	17.8	19.5	20.7	21.5	17.4	18.9	20.5	21.2	20.7	7.0
8.0	12.7	12.2	13.1	13.7	14.9	12.8	14.0	14.4	16.0	16.1	14.5	15.5	16.3	13.2	11.7	13.6	15.2	16.3	17.1	13.2	14.7	16.1	17.3	16.3	8.0
9.0	9.8	9.4	10.2	10.8	11.9	9.9	11.0	11.4	12.9	13.0	11.5	12.4	13.2	10.3	8.8	10.7	12.2	13.2	13.9	10.3	11.7	13.0	14.2	13.2	9.0
10.0	7.7	7.2	8.0	8.6	9.6	7.7	8.8	9.2	10.6	10.7	9.2	10.1	10.9	8.1	6.7	8.5	9.9	10.9	11.6	8.1	9.4	10.7	11.8	10.9	10.0
11.0		5.5	6.3	6.9	7.9	6.0	7.1	7.4	8.8	8.9	7.5	8.4	9.1	6.4	5.1	6.8	8.1	9.1	9.7	6.4	7.7	8.9	10.0	9.1	11.0
12.0		4.2	4.9	5.5	6.5	4.7	5.7	6.0	7.4	7.5	6.1	6.9	7.6	5.0	3.8	5.4	6.7	7.7	8.3	5.0	6.3	7.5	8.5	7.6	12.0
14.0		2.2	2.9	3.5	4.4	2.7	3.7	4.0	5.3	5.3	4.0	4.8	5.5	3.0	1.8	3.4	4.6	5.5	6.1	3.0	4.2	5.4	6.3	5.5	14.0
16.0						1.3	2.2	2.5	3.7	3.8	2.5	3.3	3.9	1.6		1.9	3.1	4.0	4.5		2.7	3.8	4.8	3.9	16.0
18.0							1.2	1.4	2.6	2.7	1.4	2.2	2.8				2.0	2.8	3.4		1.6	2.7	3.6	2.8	18.0
20.0																	1.1	2.0	2.5			1.8	2.7	1.9	20.0
22.0																		1.3	1.8			1.1	2.0	1.2	22.0
24.0																							1.4		24.0
26.0																									26.0
28.0																									28.0
30.0																									30.0
32.0																									32.0
34.0																									34.0
36.0																									36.0
38.0																									38.0
40.0																									40.0
42.0																									42.0
44.0																									44.0
46.0																									46.0
48.0																									48.0
50.0																									50.0
52.0																									52.0
54.0																									54.0
56.0																									56.0
1	0	46	0	0	0	46	0	0	0	0	0	0	0	0	100	46	0	0	0	92	46	0	0	0	1
2	0	0	46	0	0	46	46	0	0	0	0	0	0	100	0	46	46	0	0	46	46	46	0	0	2
3	0	0	0	46	0	0	46	92	0	0	100	0	0	0	0	46	46	46	0	46	46	46	0	100	3
4	0	0	0	0	0	0	0	0	46	0	0	100	0	0	0	0	46	46	46	0	46	46	92	100	4
5	0	0	0	0	46	0	0	0	46	92	0	0	100	0	0	0	0	46	92	0	0	46	92	0	5
ID	1	68	71 (76)	64 (67)	2 (32)	76	65 (67)	74	25 (38)	3 (24)	75	60 (63)	4 (16)	73	70	66	53 (55)	33 (42)	17 (24)	67	54	39 (50)	18 (24)	63	ID
t	31.9	27.3	32.7	34.4	34.5	30.4	31.9	23.3	33.3	27.8	24.7	22.9	22.9	24.2	22.8	30.0	32.1	32.3	32.2	26.5	29.9	30.7	26.7	24.2	t
[DEG]	0~85	0~85	0~85	0~85	0~85	0~85	0~85	0~85	0~85	0~85	0~85	0~85	0~85	0~85	38~85	33~85	0~85	0~85	0~85	48~85	39~85	32~85	0~85	30~85	[DEG]
	20	11	11	11	6	11	11	7	6	5	7	5	4	9	11	9	6	6	5	7	6	6	4	4	
	100t×2	100t	100t	100t	60t	100t	100t	60t	60t	60t	60t	60t	60t	100t	100t	100t	60t	60t	60t	100t	60t	60t	60t	60t	

m	31.7	34.4	34.4	34.4	34.4	38.7	38.7	38.7	43.0	43.0	43.0	43.0	47.4	47.4	47.4	51.7	51.7	56.0	60.0	m
2.5																				2.5
3.0																				3.0
3.5																				3.5
4.0																				4.0
4.5																				4.5
5.0	30.0	35.2	37.4	29.5	25.2															5.0
6.0	26.9	24.6	26.5	28.1	23.6	25.9	27.4	20.5												6.0
7.0	20.4	18.3	20.0	21.4	22.1	19.4	20.8	20.5	19.4	20.3	20.7	19.0								7.0
8.0	16.1	14.1	15.7	17.0	17.7	15.1	16.4	17.6	15.1	15.9	16.9	17.5	15.5	16.4	15.7					8.0
9.0	13.0	11.1	12.6	13.9	14.5	12.1	13.3	14.4	12.1	12.8	13.8	14.3	12.4	13.3	14.1	12.9	13.8			9.0
10.0	10.6	8.9	10.3	11.5	12.1	9.8	11.0	12.0	9.8	10.5	11.4	11.9	10.1	10.9	11.8	10.6	11.5	11.0		10.0
11.0	8.9	7.2	8.5	9.7	10.3	8.1	9.2	10.2	8.0	8.7	9.6	10.1	8.4	9.1	9.9	8.8	9.7	9.2	9.2	11.0
12.0	7.4	5.8	7.1	8.2	8.8	6.6	7.7	8.7	6.6	7.3	8.1	8.6	6.9	7.7	8.4	7.4	8.2	7.8	7.8	12.0
14.0	5.3	3.7	5.0	6.0	6.6	4.5	5.6	6.5	4.5	5.2	5.9	6.4	4.8	5.5	6.3	5.2	6.0	5.6	5.6	14.0
16.0	3.7	2.2	3.4	4.5	5.0	3.0	4.0	4.9	3.0	3.6	4.4	4.9	3.3	4.0	4.7	3.7	4.4	4.1	4.1	16.0
18.0	2.6		2.3	3.3	3.8	1.9	2.9	3.7		2.5	3.2	3.7		2.8	3.5	2.5	3.3	2.9	2.9	18.0
20.0	1.7		1.4	2.4	2.9		2.0	2.8			2.3	2.8		1.9	2.6		2.4			20.0
22.0	1.0			1.7	2.2		1.3	2.1			1.6	2.0			1.9		1.6			22.0
24.0				1.1	1.6			1.5				1.5			1.3					24.0
26.0					1.1			1.0												26.0
28.0																				28.0
30.0																				30.0
32.0																				32.0
34.0																				34.0
36.0																				36.0
38.0																				38.0
40.0																				40.0
42.0																				42.0
44.0																				44.0
46.0																				46.0
48.0																				48.0
50.0																				50.0
52.0																				52.0
54.0																				54.0
56.0																				56.0
1	0	92	46	0	0	92	46	0	92	92	46	0	92	46	0	92	46	92	100	1
2	100	46	46	46	0	46	46	0	92	46	46	46	92	92	92	92	92	92	100	2
3	0	46	46	46	46	46	46	92	46	46	46	92	92	92	92	92	92	92	100	3
4	0	46	46	46	92	46	46	92	46	46	92	92	46	92	92	92	92	92	100	4
5	100	0	46	92	92	46	92	92	46	92	92	92	46	46	92	46	92	92	100	5
ID	58	55	49	44 (46)	19(24)	50	45	20 (24)	42	46	48	21	38	31	22 (24)	32	23	24	16	ID
t	22.8	26.5	28.8	29.5	25.2	27.1	27.4	20.5	26.6	23.1	20.7	19.0	21.4	18.6	15.7	16.6	14.3	13.2	10.6	t
[DEG]	29~85	52~85	37~85	43~85	0~85	54~85	41~85	41~85	60~85	55~85	46~85	40~85	63~85	58~85	51~85	66~85	59~85	67~85	69~85	[DEG]
	4	6	5	4	3	4	4	3	4	3	3	3	3	3	2	2	2	2	2	
	60t	60t	60t	60t	26t	60t	60t	26t	60t	26t	26t	26t	26t	26t	26t	26t	26t	26t	26t	

ブーム

MB		0.0 t	8.0m x 7.5m	0 °	JPN

m	12.8																								m
2.5	114.4																								2.5
3.0	102.4																								3.0
3.5	92.5																								3.5
4.0	84.3																								4.0
4.5	77.3																								4.5
5.0	71.3																								5.0
6.0	53.8																								6.0
7.0	37.7																								7.0
8.0	28.3																								8.0
9.0	22.2																								9.0
10.0	17.9																								10.0
11.0																									11.0
12.0																									12.0
14.0																									14.0
16.0																									16.0
18.0																									18.0
20.0																									20.0
22.0																									22.0
24.0																									24.0
26.0																									26.0
28.0																									28.0
30.0																									30.0
32.0																									32.0
34.0																									34.0
36.0																									36.0
38.0																									38.0
40.0																									40.0
42.0																									42.0
44.0																									44.0
46.0																									46.0
48.0																									48.0
50.0																									50.0
52.0																									52.0
54.0																									54.0
56.0																									56.0
1	0																								1
2	0																								2
3	0																								3
4	0																								4
5	0																								5
ID	1																								ID
t	31.9																								t
[DEG]	0~85																								[DEG]
	20																								
	100t×2																								

MB		0.0 t	8.0m x 7.5m	360 °	JPN

m	12.8	17.1	17.1	17.1	17.1	21.4	21.4	21.4	21.4	21.4	22.2	22.2	22.2	22.3	22.3	25.8	25.8	25.8	25.8	30.1	30.1	30.1	30.1	31.6	m
2.5	110.5																								2.5
3.0	99.0	90.0	90.0	88.0	46.6	90.0	85.7	57.2	46.6	35.3	54.0	38.6	31.8	70.1	84.3										3.0
3.5	88.7	88.4	89.1	84.0	45.2	88.8	80.3	53.4	46.6	33.0	50.5	35.5	29.4	65.5	80.6	70.0	50.0	46.6	34.8						3.5
4.0	79.1	78.8	79.5	79.0	42.8	79.2	75.6	50.1	46.0	31.0	47.4	33.0	27.3	61.4	75.6	70.0	50.0	46.6	33.0						4.0
4.5	71.1	70.7	71.5	72.0	40.7	71.2	71.4	47.1	44.0	29.3	44.6	30.7	25.5	57.9	70.3	70.0	50.0	45.7	31.1	54.3	50.0	42.4	26.7	32.0	4.5
5.0	64.3	63.9	64.6	65.2	38.8	64.4	65.4	44.5	42.1	27.7	42.1	28.7	23.9	54.7	63.4	65.1	50.0	44.0	29.4	51.3	50.0	42.4	25.6	30.4	5.0
6.0	53.3	53.0	53.7	54.3	35.5	53.4	54.5	40.1	38.5	25.0	37.9	25.4	21.2	49.3	52.3	54.2	50.0	41.0	26.5	46.1	50.0	42.4	23.3	26.8	6.0
7.0	37.7	37.1	38.3	39.2	32.8	37.9	39.5	36.5	35.1	22.7	34.5	22.8	19.0	38.5	36.4	39.1	41.3	37.3	24.1	38.5	40.6	39.6	21.2	24.0	7.0
8.0	27.3	26.6	27.8	28.7	30.4	27.4	29.1	29.7	31.9	20.9	29.8	20.6	17.3	28.0	25.9	28.6	30.8	32.3	22.1	28.0	30.1	32.1	19.4	21.7	8.0
9.0	20.7	20.1	21.1	22.0	23.4	20.7	22.3	22.8	24.8	19.2	22.9	18.8	15.8	21.3	19.4	21.8	23.8	25.2	20.4	21.3	23.2	25.0	17.8	19.7	9.0
10.0	16.2	15.6	16.6	17.4	18.7	16.2	17.6	18.1	19.9	17.6	18.2	17.2	14.5	16.8	15.0	17.2	19.0	20.3	19.0	16.8	18.5	20.1	16.5	18.1	10.0
11.0		5.8	9.4	12.2	15.3	8.1	13.2	14.7	16.4	16.3	14.8	15.9	13.5	10.0	3.6	11.7	15.6	16.8	17.6	10.0	15.1	16.6	15.3	16.6	11.0
12.0		1.1	3.6	5.6	9.0	2.7	6.3	7.5	12.3	12.5	7.7	10.7	12.5	4.0		5.3	9.9	13.2	14.9	4.0	8.4	12.7	14.2	13.1	12.0
14.0					2.7		1.0	1.8	5.0	5.2	1.9	3.9	5.6				3.4	5.7	7.1		2.4	5.3	7.7	5.5	14.0
16.0									2.0	2.1		1.1	2.4					2.5	3.6			2.2	4.1	2.4	16.0
18.0																			1.7				2.1		18.0
20.0																									20.0
22.0																									22.0
24.0																									24.0
26.0																									26.0
28.0																									28.0
30.0																									30.0
32.0																									32.0
34.0																									34.0
36.0																									36.0
38.0																									38.0
40.0																									40.0
42.0																									42.0
44.0																									44.0
46.0																									46.0
48.0																									48.0
50.0																									50.0
52.0																									52.0
54.0																									54.0
56.0																									56.0
1	0	46	0	0	0	46	0	0	0	0	0	0	0	0	100	46	0	0	0	92	46	0	0	0	1
2	0	0	46	0	0	46	46	0	0	0	0	0	0	100	0	46	46	0	0	46	46	46	0	0	2
3	0	0	0	46	0	0	46	92	0	0	100	0	0	0	0	46	46	46	0	46	46	46	0	100	3
4	0	0	0	0	0	0	0	0	46	0	0	100	0	0	0	0	46	46	46	0	46	46	92	100	4
5	0	0	0	0	46	0	0	0	46	92	0	0	100	0	0	0	0	46	92	0	0	46	92	0	5
ID	1	68	71 (76)	64 (67)	2 (32)	76	65 (67)	74	25 (38)	3 (24)	75	60 (63)	4 (16)	73	70	66	53 (55)	33 (42)	17 (24)	67	54	39 (50)	18 (24)	63	ID
t	31.9	27.3	32.7	34.4	34.5	30.4	31.9	23.3	33.3	27.8	24.7	22.9	22.9	24.2	22.8	30.0	32.1	32.3	32.2	26.5	29.9	30.7	26.7	24.2	t
[DEG]	0~85	0~85	0~85	0~85	0~85	0~85	0~85	0~85	0~85	0~85	0~85	0~85	0~85	0~85	0~85	0~85	0~85	0~85	0~85	32~85	32~85	0~85	0~85	0~85	[DEG]
	20	11	11	11	6	11	11	7	6	5	7	5	4	9	11	9	6	6	5	7	6	6	4	4	
	100t×2	100t	100t	100t	60t	100t	100t	60t	60t	60t	60t	60t	60t	100t	100t	100t	60t	60t	60t	100t	60t	60t	60t	60t	

m	31.7	34.4	34.4	34.4	34.4	38.7	38.7	38.7	43.0	43.0	43.0	43.0	47.4	47.4	47.4	51.7	51.7	56.0							m
2.5																									2.5
3.0																									3.0
3.5																									3.5
4.0																									4.0
4.5																									4.5
5.0	30.0	44.0	38.0	29.5	25.2																				5.0
6.0	27.4	42.3	38.0	28.8	23.6	32.8	27.4	20.5																	6.0
7.0	25.0	38.4	38.0	26.8	22.1	32.8	27.0	20.5	27.1	23.1	20.7	19.0													7.0
8.0	22.9	29.3	31.4	24.9	20.5	30.7	25.7	20.1	27.1	23.1	20.6	19.0	21.4	18.6	15.7										8.0
9.0	21.2	22.4	24.4	23.3	19.1	23.7	24.5	18.5	23.7	23.1	19.6	18.6	21.4	18.6	15.7	16.6	14.3								9.0
10.0	19.6	17.8	19.6	21.1	17.8	19.0	20.4	17.2	18.9	19.8	18.7	17.8	19.4	18.6	15.7	16.6	14.3	13.2							10.0
11.0	16.5	13.7	16.1	17.5	16.6	15.5	16.9	16.0	15.5	16.3	17.4	16.9	15.9	16.8	15.7	16.4	14.3	13.2							11.0
12.0	12.4	6.6	11.2	14.8	15.5	9.7	13.5	14.9	9.6	12.0	14.7	15.3	10.7	13.3	15.1	12.2	14.3	13.2							12.0
14.0	5.1	1.2	4.3	7.0	8.4	3.2	5.8	8.1	3.2	4.8	6.7	8.0	3.9	5.7	7.5	4.9	6.9	5.9							14.0
16.0	2.0		1.4	3.5	4.6		2.6	4.4		1.7	3.3	4.3	1.0	2.5	3.9	1.9	3.4	2.6							16.0
18.0				1.6	2.6			2.4			1.5	2.3			2.0		1.5								18.0
20.0					1.3			1.1				1.0													20.0
22.0																									22.0
24.0																									24.0
26.0																									26.0
28.0																									28.0
30.0																									30.0
32.0																									32.0
34.0																									34.0
36.0																									36.0
38.0																									38.0
40.0																									40.0
42.0																									42.0
44.0																									44.0
46.0																									46.0
48.0																									48.0
50.0																									50.0
52.0																									52.0
54.0																									54.0
56.0																									56.0
1	0	92	46	0	0	92	46	0	92	92	46	0	92	46	0	92	46	92							1
2	100	46	46	46	0	46	46	0	92	46	46	46	92	92	92	92	92	92							2
3	0	46	46	46	46	46	46	92	46	46	46	92	92	92	92	92	92	92							3
4	0	46	46	46	92	46	46	92	46	46	92	92	46	92	92	92	92	92							4
5	100	0	46	92	92	46	92	92	46	92	92	92	46	46	92	46	92	92							5
ID	58	55	49	44 (46)	19(24)	50	45	20 (24)	42	46	48	21	38	31	22 (24)	32	23	24							ID
t	22.8	26.5	28.8	29.5	25.2	27.1	27.4	20.5	26.6	23.1	20.7	19.0	21.4	18.6	15.7	16.6	14.3	13.2							t
[DEG]	0~85	43~85	56~85	0~85	0~85	41~85	61~85	12~85	46~85	48~85	40~85	61~85	56~85	46~85	46~85	55~85	51~85	56~85							[DEG]
	4	6	5	4	3	4	4	3	4	3	3	3	3	3	2	2	2	2							
	60t	60t	60t	60t	26t	60t	60t	26t	60t	26t	26t	26t	26t	26t	26t	26t	26t	26t							

ブーム

MB		0.0 t	8.0m x 6.2m	0 °	JPN

m	12.8																							m
2.5	114.4																							2.5
3.0	102.4																							3.0
3.5	92.5																							3.5
4.0	84.3																							4.0
4.5	77.3																							4.5
5.0	71.3																							5.0
6.0	53.8																							6.0
7.0	37.7																							7.0
8.0	28.3																							8.0
9.0	22.2																							9.0
10.0	17.8																							10.0
11.0																								11.0
12.0																								12.0
14.0																								14.0
16.0																								16.0
18.0																								18.0
20.0																								20.0
22.0																								22.0
24.0																								24.0
26.0																								26.0
28.0																								28.0
30.0																								30.0
32.0																								32.0
34.0																								34.0
36.0																								36.0
38.0																								38.0
40.0																								40.0
42.0																								42.0
44.0																								44.0
46.0																								46.0
48.0																								48.0
50.0																								50.0
52.0																								52.0
54.0																								54.0
56.0																								56.0
1	0																							1
2	0																							2
3	0																							3
4	0																							4
5	0																							5
ID	1																							ID
t	31.9																							t
[DEG]	0~85																							[DEG]
	20																							
	100t×2																							

MB		0.0 t	8.0m x 6.2m	360 °	JPN

m	12.8	17.1	17.1	17.1	17.1	21.4	21.4	21.4	21.4	21.4	22.2	22.2	22.2	22.3	22.3	25.8	25.8	25.8	25.8	30.1	30.1	30.1	30.1	31.6	m
2.5	104.3																								2.5
3.0	92.8	90.0	90.0	88.0	46.6	90.0	85.7	57.2	46.6	35.3	54.0	38.6	31.8	70.1	84.3										3.0
3.5	82.2	81.9	82.6	83.2	45.2	82.3	80.3	53.4	46.6	33.0	50.5	35.5	29.4	65.5	80.6	70.0	50.0	46.6	34.8						3.5
4.0	72.9	72.6	73.3	73.9	42.8	73.1	74.1	50.1	46.0	31.0	47.4	33.0	27.3	61.4	72.1	70.0	50.0	46.6	33.0						4.0
4.5	65.2	64.8	65.6	66.2	40.7	65.3	66.4	47.1	44.0	29.3	44.6	30.7	25.5	57.9	64.4	66.1	50.0	45.7	31.1	54.3	50.0	42.4	26.7	32.0	4.5
5.0	58.7	57.8	59.1	59.6	38.8	58.8	59.8	44.5	42.1	27.7	42.1	28.7	23.9	54.7	56.7	59.6	50.0	44.0	29.4	51.3	50.0	42.4	25.6	30.4	5.0
6.0	35.9	35.2	36.5	37.6	35.5	36.0	38.0	38.7	38.5	25.0	37.9	25.4	21.2	36.8	34.3	37.5	40.0	41.0	26.5	36.8	39.2	41.5	23.3	26.8	6.0
7.0	24.7	24.2	25.3	26.2	27.8	24.9	26.5	27.1	29.3	22.7	27.2	22.8	19.0	25.5	23.4	26.1	28.2	29.7	24.1	25.5	27.5	29.5	21.2	24.0	7.0
8.0	18.2	17.6	18.7	19.5	20.9	18.3	19.8	20.3	22.2	20.9	20.4	20.6	17.3	18.9	17.0	19.4	21.3	22.6	22.1	18.9	20.6	22.4	19.4	21.7	8.0
9.0	13.9	13.3	14.3	15.0	16.3	13.9	15.3	15.8	17.5	17.6	15.8	16.9	15.8	14.4	12.7	14.9	16.6	17.9	18.7	14.4	16.1	17.7	17.8	17.8	9.0
10.0	10.8	10.3	11.2	11.9	13.1	10.8	12.1	12.5	14.2	14.3	12.6	13.6	14.5	11.3	9.7	11.7	13.4	14.5	15.3	11.3	12.8	14.3	15.6	14.5	10.0
11.0		5.8	8.8	9.5	10.6	8.1	9.7	10.1	11.7	11.8	10.2	11.2	12.0	9.0	3.6	9.4	10.9	12.0	12.7	9.0	10.4	11.9	13.0	12.0	11.0
12.0		1.1	3.6	5.6	8.7	2.7	6.3	7.5	9.8	9.9	7.7	9.3	10.1	4.0		5.3	9.0	10.1	10.8	4.0	8.4	9.9	11.0	10.1	12.0
14.0					2.7		1.0	1.8	5.0	5.2	1.9	3.9	5.6				3.4	5.7	7.1		2.4	5.3	7.7	5.5	14.0
16.0									2.0	2.1		1.1	2.4					2.5	3.6			2.2	4.1	2.4	16.0
18.0																			1.7				2.1		18.0
20.0																									20.0
22.0																									22.0
24.0																									24.0
26.0																									26.0
28.0																									28.0
30.0																									30.0
32.0																									32.0
34.0																									34.0
36.0																									36.0
38.0																									38.0
40.0																									40.0
42.0																									42.0
44.0																									44.0
46.0																									46.0
48.0																									48.0
50.0																									50.0
52.0																									52.0
54.0																									54.0
56.0																									56.0
1	0	46	0	0	0	46	0	0	0	0	0	0	0	0	100	46	0	0	0	92	46	0	0	0	1
2	0	0	46	0	0	46	46	0	0	0	0	0	0	100	0	46	46	0	0	46	46	46	0	0	2
3	0	0	0	46	0	0	46	92	0	0	100	0	0	0	0	46	46	46	0	46	46	46	0	100	3
4	0	0	0	0	0	0	0	0	46	0	0	100	0	0	0	0	46	46	46	0	46	46	92	100	4
5	0	0	0	0	46	0	0	0	46	92	0	0	100	0	0	0	0	46	92	0	0	46	92	0	5
ID	1	68	71 (76)	64 (67)	2 (32)	76	65 (67)	74	25 (38)	3 (24)	75	60 (63)	4 (16)	73	70	66	53 (55)	33 (42)	17 (24)	67	54	39 (50)	18 (24)	63	ID
t	31.9	27.3	32.7	34.4	34.5	30.4	31.9	23.3	33.3	27.8	24.7	22.9	22.9	24.2	22.8	30.0	32.1	32.3	32.2	26.5	29.9	30.7	26.7	24.2	t
[DEG]	0~85	0~85	0~85	0~85	0~85	0~85	0~85	0~85	0~85	0~85	0~85	0~85	0~85	0~85	21~85	54~85	0~85	0~85	0~85	41~85	32~85	0~85	0~85	37~85	[DEG]
	20	11	11	11	6	11	11	7	6	5	7	5	4	9	11	9	6	6	5	7	6	6	4	4	
	100t×2	100t	100t	100t	60t	100t	100t	60t	60t	60t	60t	60t	60t	100t	100t	100t	60t	60t	60t	100t	60t	60t	60t	60t	

m	31.7	34.4	34.4	34.4	34.4	38.7	38.7	38.7	43.0	43.0	43.0	43.0	47.4	47.4	47.4	51.7	51.7	56.0							m
2.5																									2.5
3.0																									3.0
3.5																									3.5
4.0																									4.0
4.5																									4.5
5.0	30.0	44.0	38.0	29.5	25.2																				5.0
6.0	27.4	38.3	38.0	28.8	23.6	32.8	27.4	20.5																	6.0
7.0	25.0	26.7	28.8	26.8	22.1	28.1	27.0	20.5	27.1	23.1	20.7	19.0													7.0
8.0	22.3	19.9	21.8	23.4	20.5	21.2	22.7	20.1	21.2	22.1	20.6	19.0	21.4	18.6	15.7										8.0
9.0	17.6	15.4	17.1	18.6	19.1	16.6	18.0	18.5	16.6	17.4	18.5	18.6	17.0	17.9	15.7	16.6	14.3								9.0
10.0	14.2	12.2	13.8	15.2	16.0	13.3	14.6	15.8	13.3	14.1	15.1	15.7	13.7	14.6	15.5	14.2	14.3	13.2							10.0
11.0	11.8	9.8	11.4	12.7	13.4	10.9	12.1	13.2	10.8	11.6	12.6	13.2	11.2	12.1	13.0	11.7	12.6	12.2							11.0
12.0	9.8	6.6	9.5	10.7	11.4	9.0	10.2	11.3	8.9	9.7	10.6	11.2	9.3	10.1	11.0	9.8	10.7	10.2							12.0
14.0	5.1	1.2	4.3	7.0	8.4	3.2	5.8	8.1	3.2	4.8	6.7	8.0	3.9	5.7	7.5	4.9	6.9	5.9							14.0
16.0	2.0		1.4	3.5	4.6		2.6	4.4		1.7	3.3	4.3	1.0	2.5	3.9	1.9	3.4	2.6							16.0
18.0				1.6	2.6			2.4			1.5	2.3			2.0		1.5								18.0
20.0					1.3			1.1				1.0													20.0
22.0																									22.0
24.0																									24.0
26.0																									26.0
28.0																									28.0
30.0																									30.0
32.0																									32.0
34.0																									34.0
36.0																									36.0
38.0																									38.0
40.0																									40.0
42.0																									42.0
44.0																									44.0
46.0																									46.0
48.0																									48.0
50.0																									50.0
52.0																									52.0
54.0																									54.0
56.0																									56.0
1	0	92	46	0	0	92	46	0	92	92	46	0	92	46	0	92	46	92							1
2	100	46	46	46	0	46	46	0	92	46	46	46	92	92	92	92	92	92							2
3	0	46	46	46	46	46	46	92	46	46	46	92	92	92	92	92	92	92							3
4	0	46	46	46	92	46	46	92	46	46	92	92	46	92	92	92	92	92							4
5	100	0	46	92	92	46	92	92	46	92	92	92	46	46	92	46	92	92							5
ID	58	55	49	44 (46)	19(24)	50	45	20 (24)	42	46	48	21	38	31	22 (24)	32	23	24							ID
t	22.8	26.5	28.8	29.5	25.2	27.1	27.4	20.5	26.6	23.1	20.7	19.0	21.4	18.6	15.7	16.6	14.3	13.2							t
[DEG]	53~85	52~85	37~85	31~85	9~85	49~85	41~85	53~85	56~85	51~85	44~85	44~85	60~85	54~85	50~85	62~85	55~85	64~85							[DEG]
	4	6	5	4	3	4	4	3	4	3	3	3	3	3	2	2	2	2							
	60t	60t	60t	60t	26t	60t	60t	26t	60t	26t	26t	26t	26t	26t	26t	26t	26t	26t							

ブーム

MB		0.0 t	8.0m x 5.0m	0 °	JPN

m	12.8																								m
2.5	114.4																								2.5
3.0	102.4																								3.0
3.5	92.5																								3.5
4.0	84.3																								4.0
4.5	77.3																								4.5
5.0	71.3																								5.0
6.0	53.7																								6.0
7.0	37.6																								7.0
8.0	28.3																								8.0
9.0	22.1																								9.0
10.0	17.8																								10.0
11.0																									11.0
12.0																									12.0
14.0																									14.0
16.0																									16.0
18.0																									18.0
20.0																									20.0
22.0																									22.0
24.0																									24.0
26.0																									26.0
28.0																									28.0
30.0																									30.0
32.0																									32.0
34.0																									34.0
36.0																									36.0
38.0																									38.0
40.0																									40.0
42.0																									42.0
44.0																									44.0
46.0																									46.0
48.0																									48.0
50.0																									50.0
52.0																									52.0
54.0																									54.0
56.0																									56.0
1	0																								1
2	0																								2
3	0																								3
4	0																								4
5	0																								5
ID	1																								ID
t	31.9																								t
[DEG]	0~85																								[DEG]
	20																								
	100t×2																								

MB		0.0 t	8.0m x 5.0m	360 °	JPN

m	12.8	17.1	17.1	17.1	17.1	21.4	21.4	21.4	21.4	21.4	22.2	22.2	22.2	22.3	22.3	25.8	25.8	25.8	25.8	30.1	30.1	30.1	30.1	31.6	m
2.5	96.7																								2.5
3.0	85.2	84.9	85.5	86.1	46.6	85.3	85.7	57.2	46.6	35.3	54.0	38.6	31.8	70.1	84.3										3.0
3.5	74.5	74.2	74.9	75.5	45.2	74.6	75.7	53.4	46.6	33.0	50.5	35.5	29.4	65.5	73.7	70.0	50.0	46.6	34.8						3.5
4.0	62.9	62.0	63.9	65.5	42.8	63.2	66.0	50.1	46.0	31.0	47.4	33.0	27.3	61.4	60.8	65.2	50.0	46.6	33.0						4.0
4.5	45.3	44.5	46.1	47.4	40.7	45.5	47.8	47.1	44.0	29.3	44.6	30.7	25.5	46.4	43.5	47.2	50.0	45.7	31.1	46.4	49.2	42.4	26.7	32.0	4.5
5.0	34.7	34.1	35.4	36.5	38.5	34.9	36.9	37.6	40.2	27.7	37.7	28.7	23.9	35.7	33.2	36.4	38.9	40.7	29.4	35.7	38.1	40.5	25.6	30.4	5.0
6.0	22.7	22.1	23.2	24.1	25.7	22.8	24.4	25.0	27.2	25.0	25.1	25.4	21.2	23.4	21.4	24.0	26.1	27.6	26.5	23.5	25.4	27.4	23.3	26.8	6.0
7.0	16.0	15.5	16.5	17.2	18.6	16.1	17.5	18.0	19.9	20.0	18.1	19.3	19.0	16.6	14.8	17.1	19.0	20.3	21.2	16.6	18.4	20.1	21.2	20.3	7.0
8.0	11.7	11.2	12.1	12.9	14.1	11.8	13.1	13.6	15.3	15.4	13.7	14.7	15.6	12.3	10.7	12.8	14.4	15.7	16.4	12.3	13.9	15.5	16.7	15.6	8.0
9.0	8.8	8.3	9.2	9.8	11.0	8.8	10.1	10.5	12.1	12.2	10.6	11.6	12.4	9.3	7.8	9.7	11.3	12.4	13.2	9.3	10.8	12.3	13.5	12.4	9.0
10.0	6.7	6.2	7.0	7.6	8.7	6.7	7.8	8.2	9.8	9.9	8.3	9.3	10.1	7.1	5.7	7.5	9.0	10.1	10.8	7.1	8.5	9.9	11.0	10.0	10.0
11.0		4.5	5.3	5.9	7.0	5.0	6.1	6.5	8.0	8.1	6.6	7.5	8.3	5.4	3.6	5.8	7.3	8.3	8.9	5.4	6.8	8.1	9.2	8.2	11.0
12.0		1.1	3.6	4.6	5.6	2.7	4.8	5.2	6.6	6.7	5.2	6.1	6.8	4.0		4.5	5.9	6.9	7.5	4.0	5.4	6.7	7.7	6.8	12.0
14.0					2.7		1.0	1.8	4.5	4.6	1.9	3.9	4.7				3.4	4.8	5.4		2.4	4.6	5.6	4.7	14.0
16.0									2.0	2.1		1.1	2.4					2.5	3.6			2.2	4.1	2.4	16.0
18.0																			1.7				2.1		18.0
20.0																									20.0
22.0																									22.0
24.0																									24.0
26.0																									26.0
28.0																									28.0
30.0																									30.0
32.0																									32.0
34.0																									34.0
36.0																									36.0
38.0																									38.0
40.0																									40.0
42.0																									42.0
44.0																									44.0
46.0																									46.0
48.0																									48.0
50.0																									50.0
52.0																									52.0
54.0																									54.0
56.0																									56.0
1	0	46	0	0	0	46	0	0	0	0	0	0	0	0	100	46	0	0	0	92	46	0	0	0	1
2	0	0	46	0	0	46	46	0	0	0	0	0	0	100	0	46	46	0	0	46	46	46	0	0	2
3	0	0	0	46	0	0	46	92	0	0	100	0	0	0	0	46	46	46	0	46	46	46	0	100	3
4	0	0	0	0	0	0	0	0	46	0	0	100	0	0	0	0	46	46	46	0	46	46	92	100	4
5	0	0	0	0	46	0	0	0	46	92	0	0	100	0	0	0	0	46	92	0	0	46	92	0	5
ID	1	68	71 (76)	64 (67)	2 (32)	76	65 (67)	74	25 (38)	3 (24)	75	60 (63)	4 (16)	73	70	66	53 (55)	33 (42)	17 (24)	67	54	39 (50)	18 (24)	63	ID
t	31.9	27.3	32.7	34.4	34.5	30.4	31.9	23.3	33.3	27.8	24.7	22.9	22.9	24.2	22.8	30.0	32.1	32.3	32.2	26.5	29.9	30.7	26.7	24.2	t
[DEG]	0~85	0~85	0~85	0~85	0~85	23~85	22~85	0~85	0~85	0~85	0~85	0~85	0~85	28~85	37~85	34~85	48~85	0~85	0~85	53~85	42~85	32~85	0~85	37~85	[DEG]
	20	11	11	11	6	11	11	7	6	5	7	5	4	9	11	9	6	6	5	7	6	6	4	4	
	100t×2	100t	100t	100t	60t	100t	100t	60t	60t	60t	60t	60t	60t	100t	100t	100t	60t	60t	60t	100t	60t	60t	60t	60t	

m	31.7	34.4	34.4	34.4	34.4	38.7	38.7	38.7	43.0	43.0	43.0	43.0	47.4	47.4	47.4	51.7	51.7	56.0							m
2.5																									2.5
3.0																									3.0
3.5																									3.5
4.0																									4.0
4.5																									4.5
5.0	30.0	37.2	38.0	29.5	25.2																				5.0
6.0	27.2	24.6	26.7	28.5	23.6	26.0	27.4	20.5																	6.0
7.0	20.0	17.7	19.5	21.1	21.9	18.9	20.4	20.5	18.9	19.8	20.7	19.0													7.0
8.0	15.4	13.3	14.9	16.4	17.1	14.4	15.8	17.0	14.4	15.2	16.3	16.9	14.8	15.7	15.7										8.0
9.0	12.2	10.2	11.8	13.1	13.8	11.2	12.5	13.7	11.2	12.0	13.0	13.6	11.6	12.5	13.4	12.1	13.1								9.0
10.0	9.8	8.0	9.4	10.7	11.4	8.9	10.2	11.3	8.9	9.7	10.6	11.2	9.3	10.1	11.0	9.8	10.7	10.2							10.0
11.0	8.0	6.2	7.7	8.9	9.5	7.2	8.4	9.4	7.2	7.9	8.8	9.3	7.5	8.3	9.1	8.0	8.9	8.4							11.0
12.0	6.6	4.9	6.3	7.5	8.1	5.8	6.9	7.9	5.8	6.5	7.3	7.9	6.1	6.9	7.7	6.6	7.4	7.0							12.0
14.0	4.5	1.2	4.2	5.3	5.9	3.2	4.8	5.8	3.2	4.4	5.2	5.7	3.9	4.8	5.5	4.5	5.3	4.9							14.0
16.0	2.0		1.4	3.5	4.4		2.6	4.3		1.7	3.3	4.2		2.5	3.9	1.9	3.4	2.6							16.0
18.0				1.6	2.6			2.4			1.5	2.3			2.0		1.5								18.0
20.0					1.3			1.1				1.0													20.0
22.0																									22.0
24.0																									24.0
26.0																									26.0
28.0																									28.0
30.0																									30.0
32.0																									32.0
34.0																									34.0
36.0																									36.0
38.0																									38.0
40.0																									40.0
42.0																									42.0
44.0																									44.0
46.0																									46.0
48.0																									48.0
50.0																									50.0
52.0																									52.0
54.0																									54.0
56.0																									56.0
1	0	92	46	0	0	92	46	0	92	92	46	0	92	46	0	92	46	92							1
2	100	46	46	46	0	46	46	0	92	46	46	46	92	92	92	92	92	92							2
3	0	46	46	46	46	46	46	92	46	46	46	92	92	92	92	92	92	92							3
4	0	46	46	46	92	46	46	92	46	46	92	92	46	92	92	92	92	92							4
5	100	0	46	92	92	46	92	92	46	92	92	92	46	46	92	46	92	92							5
ID	58	55	49	44 (46)	19(24)	50	45	20 (24)	42	46	48	21	38	31	22 (24)	32	23	24							ID
t	22.8	26.5	28.8	29.5	25.2	27.1	27.4	20.5	26.6	23.1	20.7	19.0	21.4	18.6	15.7	16.6	14.3	13.2							t
[DEG]	36~85	57~85	45~85	31~85	48~85	58~85	48~85	36~85	64~85	60~85	52~85	48~85	67~85	62~85	57~85	69~85	63~85	70~85							[DEG]
	4	6	5	4	3	4	4	3	4	3	3	3	3	3	2	2	2	2							
	60t	60t	60t	60t	26t	60t	60t	26t	60t	26t	26t	26t	26t	26t	26t	26t	26t	26t							

ブーム

MB		0.0 t	8.0m x 4.1m	0 °	JPN

m	12.8																								m
2.5	114.4																								2.5
3.0	102.4																								3.0
3.5	92.5																								3.5
4.0	84.3																								4.0
4.5	77.3																								4.5
5.0	71.3																								5.0
6.0	53.6																								6.0
7.0	37.5																								7.0
8.0	28.2																								8.0
9.0	22.1																								9.0
10.0	17.8																								10.0
11.0																									11.0
12.0																									12.0
14.0																									14.0
16.0																									16.0
18.0																									18.0
20.0																									20.0
22.0																									22.0
24.0																									24.0
26.0																									26.0
28.0																									28.0
30.0																									30.0
32.0																									32.0
34.0																									34.0
36.0																									36.0
38.0																									38.0
40.0																									40.0
42.0																									42.0
44.0																									44.0
46.0																									46.0
48.0																									48.0
50.0																									50.0
52.0																									52.0
54.0																									54.0
56.0																									56.0
1	0																								1
2	0																								2
3	0																								3
4	0																								4
5	0																								5
ID	1																								ID
t	31.9																								t
[DEG]	0~85																								[DEG]
	20																								
	100t×2																								

MB		0.0 t	8.0m x 4.1m	360 °	JPN

m	12.8	17.1	17.1	17.1	17.1	21.4	21.4	21.4	21.4	21.4	22.2	22.2	22.2	22.3	22.3	25.8	25.8	25.8	25.8	30.1	30.1	30.1	30.1	31.6	m
2.5	89.2																								2.5
3.0	77.6	77.3	78.1	78.7	46.6	77.8	78.9	57.2	46.6	35.3	54.0	38.6	31.8	70.1	76.8										3.0
3.5	54.9	54.1	55.9	57.3	45.2	55.2	57.8	53.4	46.6	33.0	50.5	35.5	29.4	56.2	52.9	57.1	50.0	46.6	34.8						3.5
4.0	38.9	38.2	39.7	40.9	42.8	39.1	41.3	42.1	44.9	31.0	42.2	33.0	27.3	40.0	37.3	40.7	43.5	45.5	33.0						4.0
4.5	29.4	28.8	30.1	31.1	33.0	29.6	31.5	32.2	34.6	29.3	32.3	30.7	25.5	30.3	28.0	31.0	33.4	35.1	31.1	30.4	32.6	34.8	26.7	32.0	4.5
5.0	23.2	22.6	23.8	24.7	26.3	23.3	25.0	25.6	27.8	27.7	25.7	27.1	23.9	24.0	21.9	24.5	26.7	28.3	29.3	24.0	26.0	28.0	25.6	28.2	5.0
6.0	15.4	14.9	15.9	16.7	18.1	15.5	17.0	17.5	19.4	19.5	17.6	18.8	19.8	16.1	14.3	16.6	18.4	19.8	20.6	16.1	17.8	19.6	21.0	19.7	6.0
7.0	10.8	10.3	11.2	11.9	13.2	10.9	12.2	12.7	14.4	14.5	12.7	13.8	14.7	11.4	9.7	11.8	13.5	14.7	15.5	11.4	13.0	14.5	15.8	14.7	7.0
8.0	7.7	7.3	8.1	8.8	10.0	7.8	9.0	9.4	11.0	11.1	9.5	10.5	11.3	8.3	6.7	8.7	10.2	11.4	12.1	8.3	9.7	11.2	12.4	11.3	8.0
9.0	5.6	5.1	5.9	6.5	7.6	5.6	6.8	7.2	8.7	8.8	7.2	8.2	9.0	6.0	4.6	6.4	7.9	9.0	9.7	6.1	7.4	8.8	9.9	8.9	9.0
10.0	4.0	3.5	4.3	4.9	5.9	4.0	5.1	5.5	6.9	7.0	5.5	6.4	7.2	4.4	3.0	4.8	6.2	7.2	7.8	4.4	5.7	7.0	8.1	7.1	10.0
11.0		2.2	3.0	3.6	4.6	2.7	3.8	4.1	5.5	5.6	4.2	5.1	5.8	3.1		3.5	4.8	5.8	6.4	3.1	4.4	5.6	6.7	5.8	11.0
12.0		1.1	2.0	2.5	3.5	1.7	2.7	3.1	4.4	4.5	3.1	4.0	4.7	2.1		2.4	3.7	4.7	5.3		3.3	4.5	5.5	4.7	12.0
14.0					1.9		1.0	1.5	2.8	2.8	1.5	2.3	3.0				2.1	3.0	3.6		1.7	2.9	3.8	3.0	14.0
16.0									1.6	1.7		1.1	1.8					1.9	2.4			1.7	2.6	1.8	16.0
18.0																			1.5				1.7		18.0
20.0																									20.0
22.0																									22.0
24.0																									24.0
26.0																									26.0
28.0																									28.0
30.0																									30.0
32.0																									32.0
34.0																									34.0
36.0																									36.0
38.0																									38.0
40.0																									40.0
42.0																									42.0
44.0																									44.0
46.0																									46.0
48.0																									48.0
50.0																									50.0
52.0																									52.0
54.0																									54.0
56.0																									56.0
1	0	46	0	0	0	46	0	0	0	0	0	0	0	0	100	46	0	0	0	92	46	0	0	0	1
2	0	0	46	0	0	46	46	0	0	0	0	0	0	100	0	46	46	0	0	46	46	46	0	0	2
3	0	0	0	46	0	0	46	92	0	0	100	0	0	0	0	46	46	46	0	46	46	46	0	100	3
4	0	0	0	0	0	0	0	0	46	0	0	100	0	0	0	0	46	46	46	0	46	46	92	100	4
5	0	0	0	0	46	0	0	0	46	92	0	0	100	0	0	0	0	46	92	0	0	46	92	0	5
ID	1	68	71 (76)	64 (67)	2 (32)	76	65 (67)	74	25 (38)	3 (24)	75	60 (63)	4 (16)	73	70	66	53 (55)	33 (42)	17 (24)	67	54	39 (50)	18 (24)	63	ID
t	31.9	27.3	32.7	34.4	34.5	30.4	31.9	23.3	33.3	27.8	24.7	22.9	22.9	24.2	22.8	30.0	32.1	32.3	32.2	26.5	29.9	30.7	26.7	24.2	t
[DEG]	0~85	23~85	0~85	0~85	0~85	37~85	35~85	22~85	0~85	0~85	28~85	0~85	0~85	38~85	49~85	47~85	41~85	41~85	0~85	61~85	52~85	39~85	32~85	43~85	[DEG]
	20	11	11	11	6	11	11	7	6	5	7	5	4	9	11	9	6	6	5	7	6	6	4	4	
	100t×2	100t	100t	100t	60t	100t	100t	60t	60t	60t	60t	60t	60t	100t	100t	100t	60t	60t	60t	100t	60t	60t	60t	60t	

m	31.7	34.4	34.4	34.4	34.4	38.7	38.7	38.7	43.0	43.0	43.0	43.0	47.4	47.4	47.4	51.7	m
2.5																	2.5
3.0																	3.0
3.5																	3.5
4.0																	4.0
4.5																	4.5
5.0	27.9	25.2	27.3	29.2	25.2												5.0
6.0	19.5	17.2	19.0	20.6	21.4	18.4	19.9	20.5									6.0
7.0	14.4	12.3	14.0	15.4	16.2	13.4	14.8	16.1	13.4	14.3	15.3	16.0					7.0
8.0	11.1	9.2	10.7	12.0	12.7	10.2	11.5	12.6	10.2	11.0	11.9	12.5	10.5	11.4	12.3		8.0
9.0	8.7	6.9	8.3	9.6	10.3	7.8	9.1	10.1	7.8	8.6	9.5	10.1	8.2	9.0	9.9	9.6	9.0
10.0	6.9	5.2	6.6	7.8	8.4	6.1	7.3	8.3	6.1	6.8	7.7	8.2	6.4	7.2	8.0	7.8	10.0
11.0	5.5	3.9	5.2	6.4	7.0	4.8	5.9	6.9	4.7	5.4	6.3	6.8	5.1	5.8	6.6	6.3	11.0
12.0	4.4		4.1	5.3	5.8	3.7	4.8	5.7	3.7	4.3	5.2	5.7	4.0	4.7	5.5	5.2	12.0
14.0	2.8		2.5	3.6	4.1		3.1	4.0			3.5	4.0		3.0	3.8	3.5	14.0
16.0	1.6			2.4	2.9		1.9	2.8			2.3	2.7			2.6		16.0
18.0				1.5	2.0			1.9				1.8					18.0
20.0					1.3			1.1									20.0
22.0																	22.0
24.0																	24.0
26.0																	26.0
28.0																	28.0
30.0																	30.0
32.0																	32.0
34.0																	34.0
36.0																	36.0
38.0																	38.0
40.0																	40.0
42.0																	42.0
44.0																	44.0
46.0																	46.0
48.0																	48.0
50.0																	50.0
52.0																	52.0
54.0																	54.0
56.0																	56.0
1	0	92	46	0	0	92	46	0	92	92	46	0	92	46	0	46	1
2	100	46	46	46	0	46	46	0	92	46	46	46	92	92	92	92	2
3	0	46	46	46	46	46	46	92	46	46	46	92	92	92	92	92	3
4	0	46	46	46	92	46	46	92	46	46	92	92	46	92	92	92	4
5	100	0	46	92	92	46	92	92	46	92	92	92	46	46	92	92	5
ID	58	55	49	44 (46)	19(24)	50	45	20 (24)	42	46	48	21	38	31	22 (24)	23	ID
t	22.8	26.5	28.8	29.5	25.2	27.1	27.4	20.5	26.6	23.1	20.7	19.0	21.4	18.6	15.7	14.3	t
[DEG]	46~85	63~85	55~85	42~85	37~85	65~85	57~85	46~85	69~85	66~85	60~85	55~85	72~85	68~85	63~85	69~85	[DEG]
	4	6	5	4	3	4	4	3	4	3	3	3	3	3	2	2	
	60t	60t	60t	60t	26t	60t	60t	26t	60t	26t	26t	26t	26t	26t	26t	26t	

ブーム

MB		0.0 t	8.0m x 2.5m	0 °	JPN

m	12.8																								m
2.5	114.4																								2.5
3.0	102.4																								3.0
3.5	92.5																								3.5
4.0	84.3																								4.0
4.5	77.3																								4.5
5.0	71.3																								5.0
6.0	52.9																								6.0
7.0	37.1																								7.0
8.0	27.9																								8.0
9.0	21.9																								9.0
10.0	17.6																								10.0
11.0																									11.0
12.0																									12.0
14.0																									14.0
16.0																									16.0
18.0																									18.0
20.0																									20.0
22.0																									22.0
24.0																									24.0
26.0																									26.0
28.0																									28.0
30.0																									30.0
32.0																									32.0
34.0																									34.0
36.0																									36.0
38.0																									38.0
40.0																									40.0
42.0																									42.0
44.0																									44.0
46.0																									46.0
48.0																									48.0
50.0																									50.0
52.0																									52.0
54.0																									54.0
56.0																									56.0
1	0																								1
2	0																								2
3	0																								3
4	0																								4
5	0																								5
ID	1																								ID
t	31.9																								t
[DEG]	0~85																								[DEG]
	20																								
	100t×2																								

MB		0.0 t	8.0m x 2.5m	360 °	JPN

m	12.8	17.1	17.1	17.1	17.1	21.4	21.4	21.4	21.4	21.4	22.2	22.2	22.2	22.3	22.3	25.8	25.8	25.8	25.8	30.1	30.1	30.1	31.6	31.7	m
2.5	43.4																								2.5
3.0	28.8	28.2	29.6	30.7	32.6	29.1	31.0	31.8	34.3	34.5	31.9	33.5	31.8	29.8	27.4										3.0
3.5	20.8	20.2	21.4	22.3	24.0	20.9	22.6	23.3	25.5	25.7	23.4	24.8	26.0	21.6	19.5	22.2	24.4	25.9	27.0						3.5
4.0	15.6	15.1	16.2	17.0	18.5	15.8	17.3	17.9	19.9	20.0	17.9	19.2	20.3	16.4	14.5	16.9	18.9	20.3	21.2						4.0
4.5	12.0	11.6	12.6	13.3	14.7	12.2	13.6	14.1	16.0	16.1	14.2	15.4	16.3	12.8	11.0	13.2	15.0	16.3	17.2	14.5	16.1	17.5	16.3		4.5
5.0	9.4	9.0	9.9	10.6	11.9	9.6	10.9	11.4	13.1	13.2	11.4	12.5	13.5	10.1	8.4	10.5	12.2	13.5	14.2	11.7	13.3	14.6	13.4	13.2	5.0
6.0	5.9	5.5	6.3	7.0	8.1	6.0	7.2	7.6	9.2	9.3	7.7	8.7	9.5	6.5	4.9	6.9	8.4	9.5	10.2	7.9	9.3	10.5	9.5	9.2	6.0
7.0	3.6	3.2	3.9	4.6	5.6	3.6	4.8	5.2	6.6	6.7	5.2	6.2	6.9	4.1		4.5	5.9	6.9	7.6	5.4	6.8	7.9	6.9	6.7	7.0
8.0	1.9		2.3	2.9	3.9		3.1	3.5	4.9	4.9	3.5	4.4	5.1				4.2	5.1	5.8	3.7	5.0	6.0	5.1	4.9	8.0
9.0				1.6	2.6			2.2	3.5	3.6	2.2	3.1	3.8				2.9	3.8	4.4		3.6	4.7	3.8	3.6	9.0
10.0					1.6				2.5	2.6		2.1	2.7					2.8	3.4		2.6	3.6	2.7	2.5	10.0
11.0									1.7	1.8			1.9					1.9	2.5			2.7			11.0
12.0													1.3						1.8			2.1			12.0
14.0																									14.0
16.0																									16.0
18.0																									18.0
20.0																									20.0
22.0																									22.0
24.0																									24.0
26.0																									26.0
28.0																									28.0
30.0																									30.0
32.0																									32.0
34.0																									34.0
36.0																									36.0
38.0																									38.0
40.0																									40.0
42.0																									42.0
44.0																									44.0
46.0																									46.0
48.0																									48.0
50.0																									50.0
52.0																									52.0
54.0																									54.0
56.0																									56.0
1	0	46	0	0	0	46	0	0	0	0	0	0	0	0	100	46	0	0	0	46	0	0	0	0	1
2	0	0	46	0	0	46	46	0	0	0	0	0	0	100	0	46	46	0	0	46	46	0	0	100	2
3	0	0	0	46	0	0	46	92	0	0	100	0	0	0	0	46	46	46	0	46	46	0	100	0	3
4	0	0	0	0	0	0	0	0	46	0	0	100	0	0	0	0	46	46	46	46	46	92	100	0	4
5	0	0	0	0	46	0	0	0	46	92	0	0	100	0	0	0	0	46	92	0	46	92	0	100	5
ID	1	68	71 (76)	64 (67)	2 (32)	76	65 (67)	74	25 (38)	3 (24)	75	60 (63)	4 (16)	73	70	66	53 (55)	33 (42)	17 (24)	54	39 (50)	18 (24)	63	58	ID
t	31.9	27.3	32.7	34.4	34.5	30.4	31.9	23.3	33.3	27.8	24.7	22.9	22.9	24.2	22.8	30.0	32.1	32.3	32.2	29.9	30.7	26.7	24.2	22.8	t
[DEG]	0~85	47~85	40~85	31~85	23~85	59~85	52~85	50~85	40~85	40~85	52~85	45~85	38~85	59~85	65~85	64~85	57~85	48~85	41~85	67~85	59~85	51~85	62~85	63~85	[DEG]
	6	11	11	11	6	11	11	7	6	5	7	5	4	9	11	9	6	6	5	6	6	4	4	4	
	60t	100t	100t	100t	60t	100t	100t	60t	60t	60t	60t	60t	60t	100t	100t	100t	60t	60t	60t	60t	60t	60t	60t	60t	

m	34.4	34.4	34.4	38.7	43.0	m
2.5						2.5
3.0						3.0
3.5						3.5
4.0						4.0
4.5						4.5
5.0	12.7	14.2	15.0			5.0
6.0	8.9	10.2	10.9	10.8		6.0
7.0	6.3	7.6	8.2	8.1	8.0	7.0
8.0	4.6	5.7	6.3	6.2	6.2	8.0
9.0	3.2	4.4	5.0	4.8	4.8	9.0
10.0		3.3	3.9	3.8	3.7	10.0
11.0		2.5	3.0	2.9	2.9	11.0
12.0			2.3	2.2		12.0
14.0						14.0
16.0						16.0
18.0						18.0
20.0						20.0
22.0						22.0
24.0						24.0
26.0						26.0
28.0						28.0
30.0						30.0
32.0						32.0
34.0						34.0
36.0						36.0
38.0						38.0
40.0						40.0
42.0						42.0
44.0						44.0
46.0						46.0
48.0						48.0
50.0						50.0
52.0						52.0
54.0						54.0
56.0						56.0
1	46	0	0	0	0	1
2	46	46	0	0	46	2
3	46	46	46	92	92	3
4	46	46	92	92	92	4
5	46	92	92	92	92	5
ID	49	44 (46)	19(24)	20 (24)	21	ID
t	28.8	29.5	25.2	20.5	19.0	t
[DEG]	68~85	60~85	57~85	61~85	69~85	[DEG]
	5	4	3	3	3	
	60t	60t	26t	26t	26t	

オールテレーンクレーン
ATF-140N-5.1
フルオートラフィングジブ

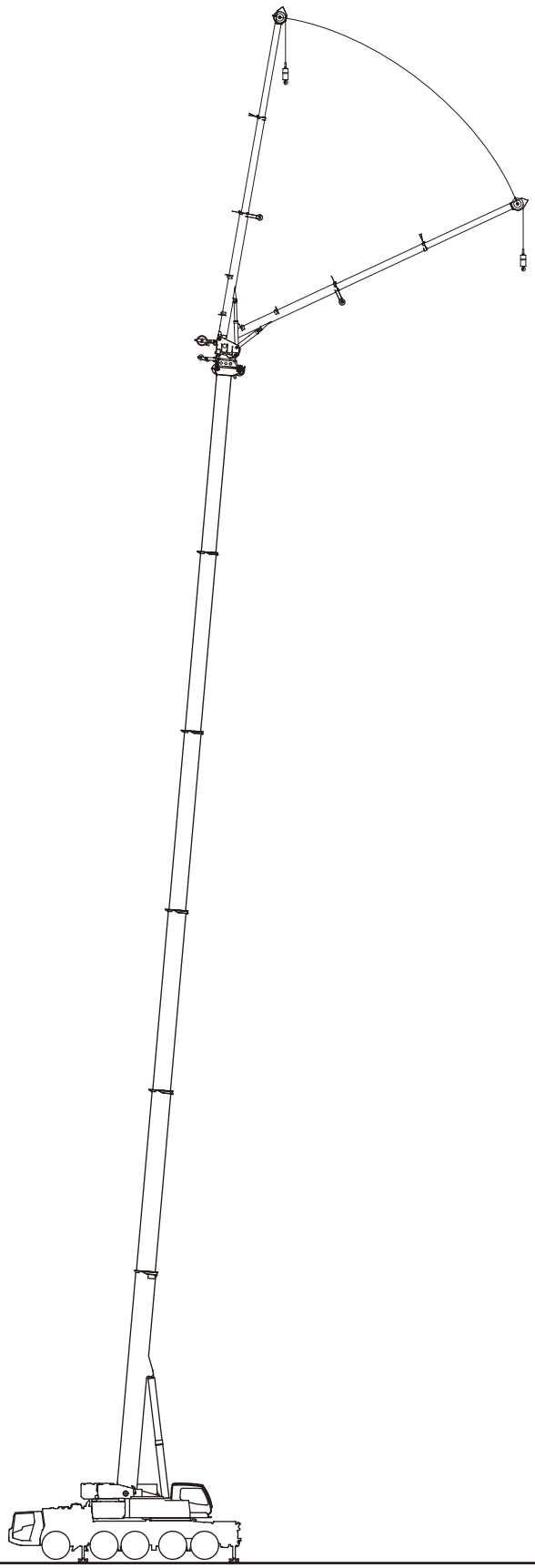

ブーム＋フルオートラフィングジブ(FLJ)作業半径－揚程図

12.8mブーム+フルオートラフィングジブ

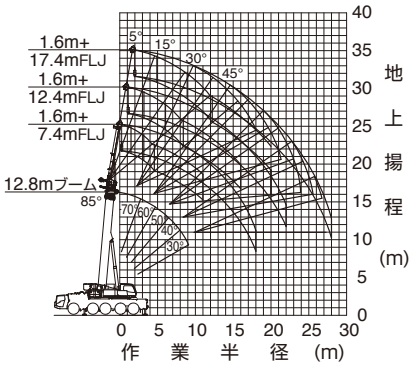

（注意） 1. 上図はブームおよびジブのたわみを含んでいません。
2. カウンタウエイト40.9 t 、アウトリガ張出幅7.5m時の性能を図示しています。

25.8mブーム+フルオートラフィングジブ

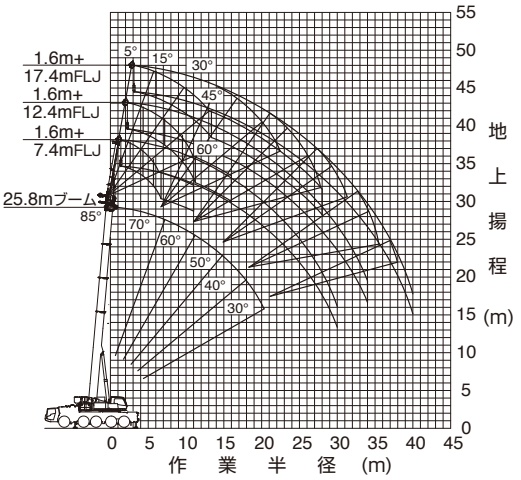

（注意） 1. 上図はブームおよびジブのたわみを含んでいません。
2. カウンタウエイト40.9 t 、アウトリガ張出幅7.5m時の性能を図示しています。

30.1mブーム+フルオートラフィングジブ

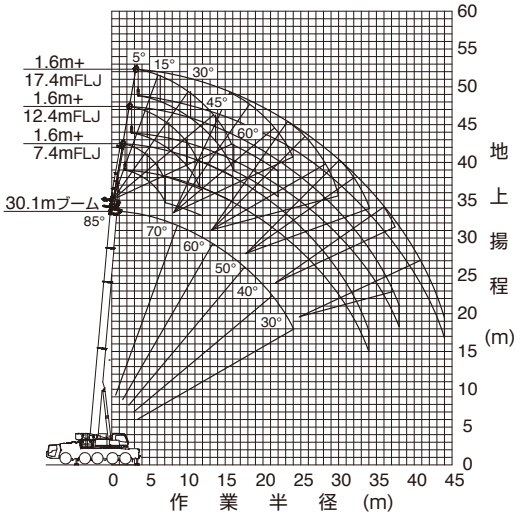

（注意） 1. 上図はブームおよびジブのたわみを含んでいません。
2. カウンタウエイト40.9 t 、アウトリガ張出幅7.5m時の性能を図示しています。

34.4mブーム+フルオートラフィングジブ

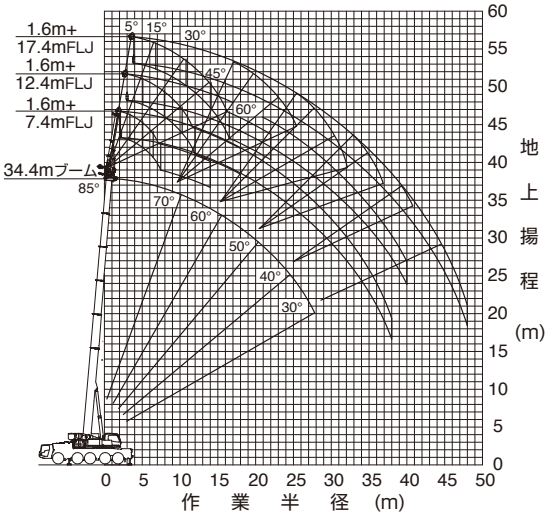

（注意） 1. 上図はブームおよびジブのたわみを含んでいません。
2. カウンタウエイト40.9 t 、アウトリガ張出幅7.5m時の性能を図示しています。

フルオートラフィングジブ

ブーム＋フルオートラフィングジブ(FLJ)作業半径－揚程図

38.7mブーム+フルオートラフィングジブ

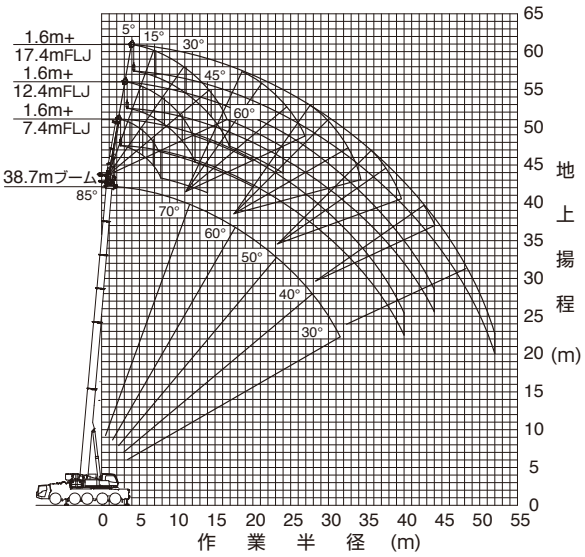

（注意） 1. 上図はブームおよびジブのたわみを含んでいません。
2. カウンタウエイト40.9ｔ、アウトリガ張出幅7.5m時の性能を図示しています。

43.0mブーム+フルオートラフィングジブ

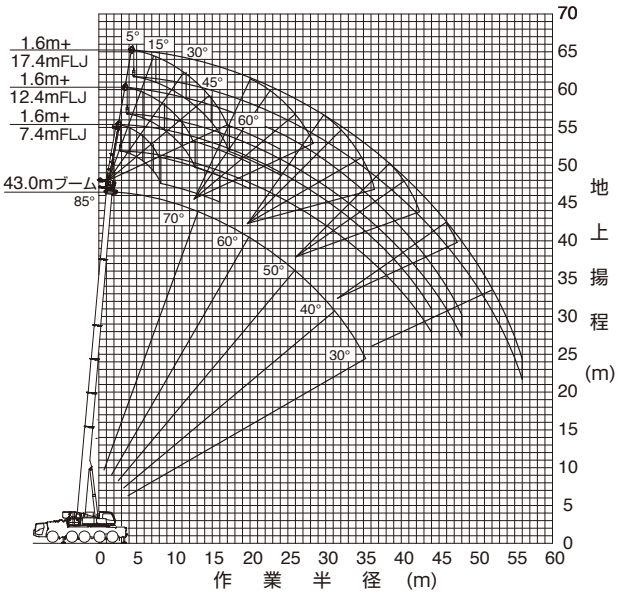

（注意） 1. 上図はブームおよびジブのたわみを含んでいません。
2. カウンタウエイト40.9ｔ、アウトリガ張出幅7.5m時の性能を図示しています。

47.4mブーム+フルオートラフィングジブ

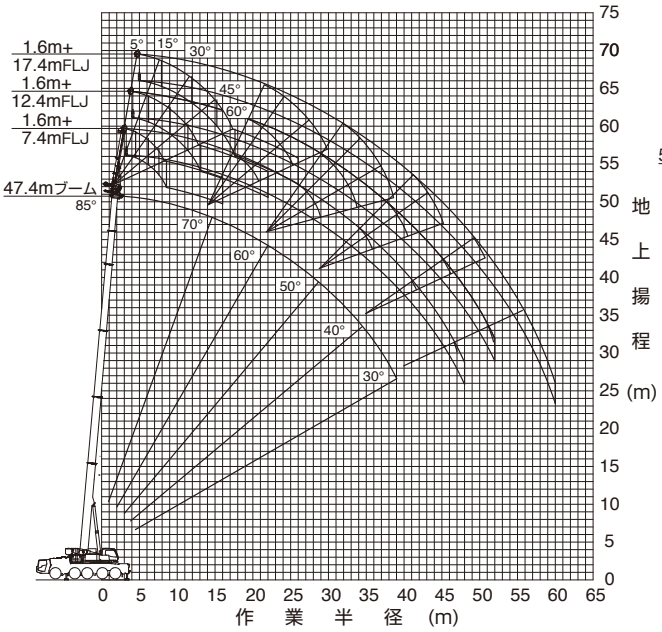

（注意） 1. 上図はブームおよびジブのたわみを含んでいません。
2. カウンタウエイト40.9ｔ、アウトリガ張出幅7.5m時の性能を図示しています。

51.7mブーム+フルオートラフィングジブ

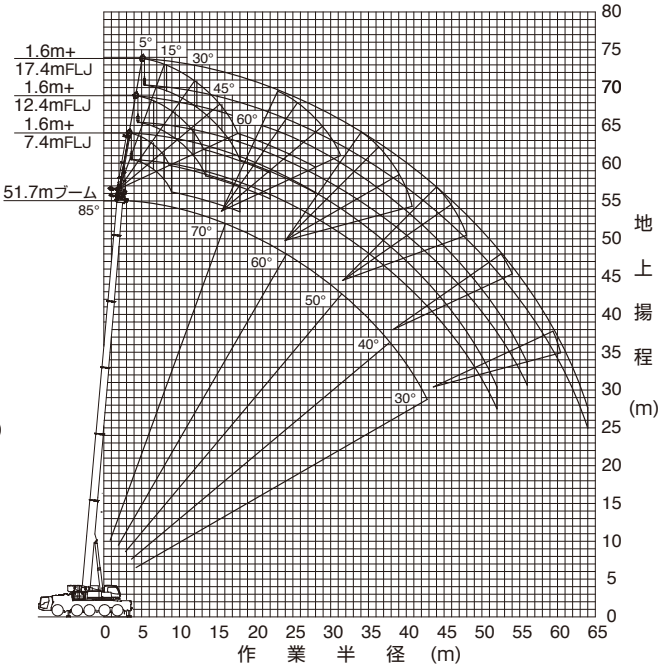

（注意） 1. 上図はブームおよびジブのたわみを含んでいません。
2. カウンタウエイト40.9ｔ、アウトリガ張出幅7.5m時の性能を図示しています。

56.0mブーム+フルオートラフィングジブ

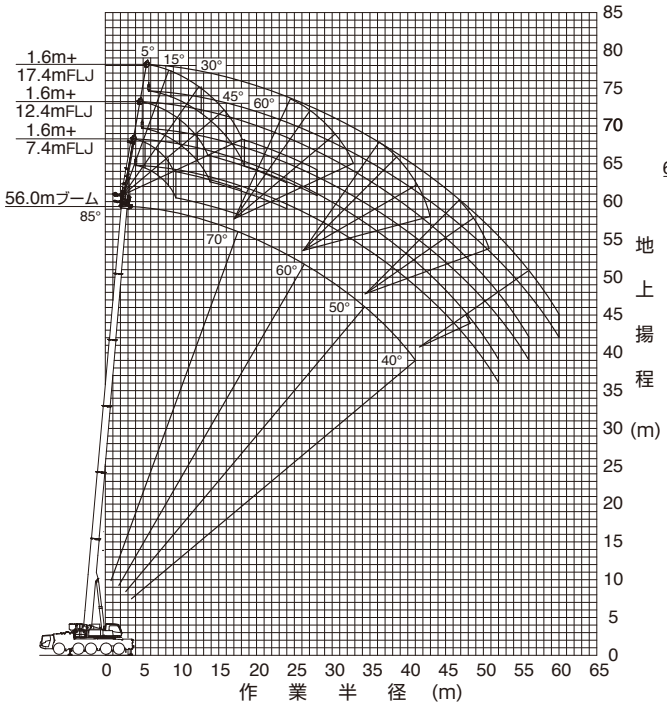

（注意） 1. 上図はブームおよびジブのたわみを含んでいません。
2. カウンタウエイト40.9ｔ、アウトリガ張出幅7.5m時の性能を図示しています。

60.0mブーム+フルオートラフィングジブ

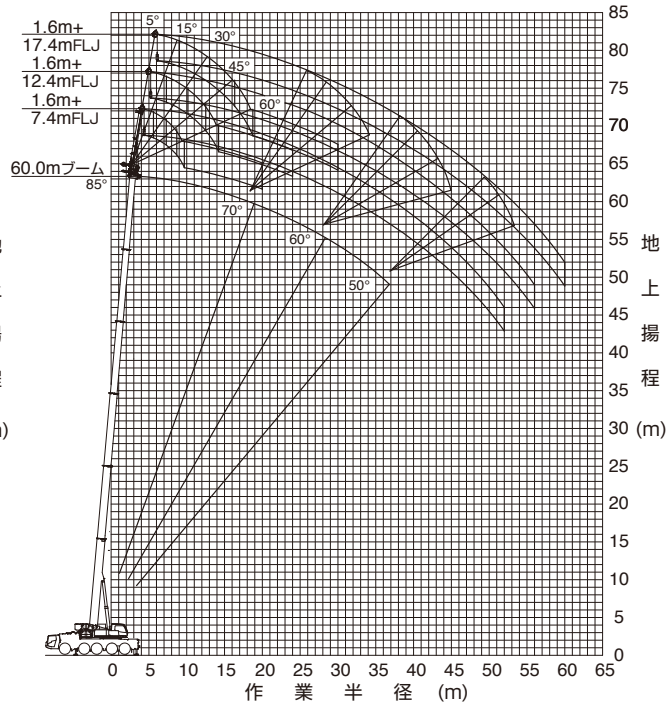

（注意） 1. 上図はブームおよびジブのたわみを含んでいません。
2. カウンタウエイト40.9ｔ、アウトリガ張出幅7.5m時の性能を図示しています。

ブーム＋フルオートラフィングジブ(FLJ)定格総荷重表

■ 定格総荷重表注意事項

◆性能設定のあるカウンタウエイトとアウトリガ張出幅の組合せを、下表に○印で示します。

アウトリガ張出幅＼カウンタウエイト	40.9 t	28.9 t	25.4 t	15.4 t	7.1 t
7.5 m	○	○	○	○	○
6.2 m	○	○	○	○	
5.0 m		○	○	○	

※同じブーム長さでも、ブームの伸長状態によって定格総荷重が異なります。

◆定格総荷重は、ブームとジブのたわみを含んだ実際の作業半径に基づいています。
◆定格総荷重表中の標準巻掛本数より少ない本数で使用する場合、最大荷重の上限は下表のとおりです。

巻掛本数	1本
最大荷重	8.7t

◆定格総荷重はアウトリガを水平堅土上に設置したときの値で、太線より上側はクレーンの強度に基づき、下側はクレーンの安定に基づいています。
◆定格総荷重表は、風による影響を含んでいません。瞬間最大風速が10m／s以上の風速では、クレーン作業を中止してください。

定格総荷重表中のシンボル、記号の説明

MB	ブームの定格総荷重を示します。	m	ブーム長さを示します。
FLJ	フルオートラフィングジブ (FLJ) の定格総荷重を示します。		ジブのオフセット角度を示し、ブームの中心線とジブの中心線のなす角度を示します。
	フルオートラフィングジブ (FLJ) のジブ長さを示します。	m	作業半径を示します。
	カウンタウエイト（C/W）組合せを示します。	%	ブーム伸縮状態 (伸縮割合 %) を示します。 IDはブーム伸縮状態に対応する番号を示します。
	アウトリガ張出幅を示します。		無負荷状態で作動可能なブーム起伏角度範囲を示します。
360 °	吊上げ可能な旋回範囲を示します。		標準巻掛本数を示します。
t JPN	定格総荷重の単位を示します。		標準フックを示します。

■ 定格総荷重表の見方

1. アウトリガ張出幅とカウンタウエイトの質量とジブ長さに応じた性能を選択します。
2. ブーム長さとIDとオフセット角度の欄を見ます。
3. 作業半径を見ます。
4. オフセット角度と作業半径が交差するところが定格総荷重です。

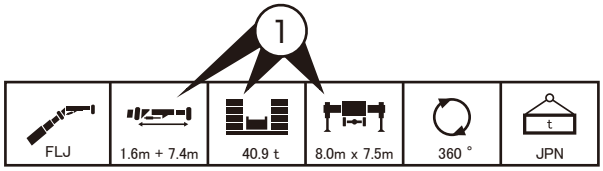

m	12.8	12.8	12.8	12.8	12.8	25.8	25.8	25.8	25.8	25.8	30.1	30.1	30.1	30.1	30.1	30.1	30.1	30.1	30.1	30.1	34.4	34.4	34.4	34.4	34.4	m
°	5	15	30	45	60	5	15	30	45	60	5	15	30	45	60	5	15	30	45	60	5	15	30	45	60	°
3.0	7.3																									3.0
3.5	7.3	7.3																								3.5
4.0	7.3	7.3				7.3																				4.0
4.5	7.3	7.3				7.3																				4.5
5.0	7.3	7.3				7.3	7.3				7.3					7.3										5.0
6.0	7.3	7.3	7.3			7.3	7.3				7.3	7.3				7.3	7.3				7.3	7.3				6.0
7.0	7.3	7.3	7.3	5.9		7.3	7.3	7.3			7.3	7.3	7.3			7.3	7.3	7.3			7.3	7.3				7.0
8.0	7.3	7.3	7.0	5.7		7.3	7.3	7.3	6.2		7.3	7.3	7.3			7.3	7.3	7.3			7.3	7.3	7.3			8.0
9.0	7.3	7.3	6.6	5.5		7.3	7.3	7.3	6.0	4.5	7.3	7.3	7.3	6.1		7.3	7.3	7.3	6.1		7.3	7.3	7.3	6.2		9.0
10.0	7.3	7.3	6.3	5.4		7.3	7.3	7.3	5.9	4.5	7.3	7.3	7.3	6.0	4.5	7.3	7.3	7.3	6.0	4.5	7.3	7.3	7.3	6.1	4.5	10.0
11.0	7.3	7.0	6.1	5.2		7.3	7.3	7.3	5.8	4.4	7.3	7.3	7.3	5.9	4.5	7.3	7.3	7.3	5.9	4.5	7.3	7.3	7.3	6.0	4.5	11.0
12.0	7.1	6.5	5.8			7.3	7.3	7.0	5.6		7.3	7.3	7.3	5.8	4.4	7.3	7.3	7.3	5.8	4.4	7.3	7.3	7.3	5.9	4.4	12.0
14.0	6.1	5.9	5.4			7.3	7.3	6.6	5.4		7.3	7.3	6.9	5.6		7.3	7.3	6.9	5.6		7.3	7.3	7.2	5.7	4.4	14.0
16.0	5.4	5.3				7.3	7.3	6.2	5.2		7.3	7.3	6.5	5.4		7.3	7.3	6.5	5.4		7.3	7.3	6.8	5.5		16.0
18.0	4.9					7.3	6.9	5.9	5.1		7.3	7.3	6.2	5.2		7.3	7.3	6.2	5.2		7.3	7.3	6.5	5.3		18.0
20.0						7.1	6.4	5.7			7.3	7.0	5.9	5.1		7.3	7.0	5.9	5.1		7.3	7.3	6.2	5.2		20.0
22.0						6.5	6.0	5.4			7.3	6.6	5.7			7.3	6.6	5.7			7.3	7.1	6.0	5.1		22.0
24.0						6.0	5.7	5.3			6.8	6.2	5.5			6.8	6.2	5.5			7.3	6.7	5.7			24.0
26.0						5.5	5.4				6.2	5.8	5.3			6.2	5.8	5.3			7.0	6.3	5.6			26.0
28.0						5.1	5.1				5.8	5.5				5.8	5.5				6.5	6.0	5.4			28.0
30.0						4.8					5.4	5.3				5.4	5.3				6.0	5.7	5.3			30.0
32.0											5.1	5.1				5.1	5.1				5.7	5.4				32.0
34.0											4.8					4.8					5.3	5.2				34.0
36.0																					5.0	5.1				36.0
38.0																					4.3					38.0
40.0																										40.0
44.0																										44.0
48.0																										48.0
52.0																										52.0
56.0																										56.0
60.0																										60.0
64.0																										64.0
68.0																										68.0
72.0																										72.0
1	0	0	0	0		46	46	46	46	46	92	92	92	92	92	46	46	46	46	46	92	92	92	92	92	1
2	0	0	0	0		46	46	46	46	46	46	46	46	46	46	46	46	46	46	46	46	46	46	46	46	2
3	0	0	0	0		46	46	46	46	46	46	46	46	46	46	46	46	46	46	46	46	46	46	46	46	3
4	0	0	0	0		0	0	0	0	0	0	0	0	0	0	46	46	46	46	46	46	46	46	46	46	4
5	0	0	0	0		0	0	0	0	0	0	0	0	0	0	0	0	0	0	0	0	0	0	0	0	5
ID	1	1	1	1		66	66	66	66	66	67	67	67	67	67	54	54	54	54	54	55	55	55	55	55	ID
[DEG]	0~83	0~85	0~85	0~85		22~83	31~85	45~85	61~85	74~85	23~83	31~85	44~85	62~85	77~85	22~83	31~85	43~85	61~85	77~85	24~83	31~85	47~85	59~85	76~85	[DEG]
	1	1	1	1		1	1	1	1	1		1	1	1	1	1	1	1	1	1	1	1	1	1	1	
	8.7t	8.7t	8.7t	8.7t		8.7t	8.7t	8.7t	8.7t	8.7t		8.7t	8.7t	8.7t	8.7t	8.7t	8.7t	8.7t	8.7t	8.7t	8.7t	8.7t	8.7t	8.7t	8.7t	

フルオートラフィングジブ

FLJ	1.6m + 7.4m	40.9 t	8.0m x 7.5m	360 °	JPN

m	12.8	12.8	12.8	12.8	12.8	25.8	25.8	25.8	25.8	25.8	30.1	30.1	30.1	30.1	30.1	30.1	30.1	30.1	30.1	30.1	34.4	34.4	34.4	34.4	34.4	m
°	5	15	30	45	60	5	15	30	45	60	5	15	30	45	60	5	15	30	45	60	5	15	30	45	60	°
3.0	7.3																									3.0
3.5	7.3	7.3																								3.5
4.0	7.3	7.3				7.3																				4.0
4.5	7.3	7.3				7.3																				4.5
5.0	7.3	7.3				7.3	7.3				7.3					7.3										5.0
6.0	7.3	7.3	7.3			7.3	7.3				7.3	7.3				7.3	7.3				7.3	7.3				6.0
7.0	7.3	7.3	7.3	5.9		7.3	7.3	7.3			7.3	7.3	7.3			7.3	7.3	7.3			7.3	7.3				7.0
8.0	7.3	7.3	7.0	5.7		7.3	7.3	7.3	6.2		7.3	7.3	7.3			7.3	7.3	7.3			7.3	7.3	7.3			8.0
9.0	7.3	7.3	6.6	5.5		7.3	7.3	7.3	6.0	4.5	7.3	7.3	7.3	6.1		7.3	7.3	7.3	6.1		7.3	7.3	7.3	6.2		9.0
10.0	7.3	7.3	6.3	5.4		7.3	7.3	7.3	5.9	4.5	7.3	7.3	7.3	6.0	4.5	7.3	7.3	7.3	6.0	4.5	7.3	7.3	7.3	6.1	4.5	10.0
11.0	7.3	7.0	6.1	5.2		7.3	7.3	7.3	5.8	4.4	7.3	7.3	7.3	5.9	4.5	7.3	7.3	7.3	5.9	4.5	7.3	7.3	7.3	6.0	4.5	11.0
12.0	7.1	6.5	5.8			7.3	7.3	7.0	5.6		7.3	7.3	7.3	5.8	4.4	7.3	7.3	7.3	5.8	4.4	7.3	7.3	7.3	5.9	4.4	12.0
14.0	6.1	5.9	5.4			7.3	7.3	6.6	5.4		7.3	7.3	6.9	5.6		7.3	7.3	6.9	5.6		7.3	7.3	7.2	5.7	4.4	14.0
16.0	5.4	5.3				7.3	7.3	6.2	5.2		7.3	7.3	6.5	5.4		7.3	7.3	6.5	5.4		7.3	7.3	6.8	5.5		16.0
18.0	4.9					7.3	6.9	5.9	5.1		7.3	7.3	6.2	5.2		7.3	7.3	6.2	5.2		7.3	7.3	6.5	5.3		18.0
20.0						7.1	6.4	5.7			7.3	7.0	5.9	5.1		7.3	7.0	5.9	5.1		7.3	7.3	6.2	5.2		20.0
22.0						6.5	6.0	5.4			7.3	6.6	5.7			7.3	6.6	5.7			7.3	7.1	6.0	5.1		22.0
24.0						6.0	5.7	5.3			6.8	6.2	5.5			6.8	6.2	5.5			7.3	6.7	5.7			24.0
26.0						5.5	5.4				6.2	5.8	5.3			6.2	5.8	5.3			7.0	6.3	5.6			26.0
28.0						5.1	5.1				5.8	5.5				5.8	5.5				6.5	6.0	5.4			28.0
30.0						4.8					5.4	5.3				5.4	5.3				6.0	5.7	5.3			30.0
32.0											5.1	5.1				5.1	5.1				5.7	5.4				32.0
34.0											4.8					4.8					5.3	5.2				34.0
36.0																					5.0	5.1				36.0
38.0																					4.3					38.0
40.0																										40.0
44.0																										44.0
48.0																										48.0
52.0																										52.0
56.0																										56.0
60.0																										60.0
64.0																										64.0
68.0																										68.0
72.0																										72.0
1	0	0	0	0		46	46	46	46	46	92	92	92	92	92	46	46	46	46	46	92	92	92	92	92	1
2	0	0	0	0		46	46	46	46	46	46	46	46	46	46	46	46	46	46	46	46	46	46	46	46	2
3	0	0	0	0		46	46	46	46	46	46	46	46	46	46	46	46	46	46	46	46	46	46	46	46	3
4	0	0	0	0		0	0	0	0	0	0	0	0	0	0	46	46	46	46	46	46	46	46	46	46	4
5	0	0	0	0		0	0	0	0	0	0	0	0	0	0	0	0	0	0	0	0	0	0	0	0	5
ID	1	1	1	1		66	66	66	66	66	67	67	67	67	67	54	54	54	54	54	55	55	55	55	55	ID
[DEG]	0~83	0~85	0~85	0~85		22~83	31~85	45~85	61~85	74~85	23~83	31~85	44~85	62~85	77~85	22~83	31~85	43~85	61~85	77~85	24~83	31~85	47~85	59~85	76~85	[DEG]
	1	1	1	1		1	1	1	1	1	1	1	1	1	1	1	1	1	1	1	1	1	1	1	1	
	8.7t	8.7t	8.7t	8.7t		8.7t	8.7t	8.7t	8.7t	8.7t	8.7t	8.7t	8.7t	8.7t	8.7t	8.7t	8.7t	8.7t	8.7t	8.7t	8.7t	8.7t	8.7t	8.7t	8.7t	

m	34.4	34.4	34.4	34.4	34.4	38.7	38.7	38.7	38.7	38.7	43.0	43.0	43.0	43.0	43.0	43.0	43.0	43.0	43.0	43.0	47.4	47.4	47.4	47.4	47.4	m
°	5	15	30	45	60	5	15	30	45	60	5	15	30	45	60	5	15	30	45	60	5	15	30	45	60	°
3.0																										3.0
3.5																										3.5
4.0																										4.0
4.5																										4.5
5.0																										5.0
6.0	7.3	7.3																								6.0
7.0	7.3	7.3				7.3	7.3																			7.0
8.0	7.3	7.3	7.3			7.3	7.3				7.3	7.3				7.3	7.3					7.3				8.0
9.0	7.3	7.3	7.3	6.2		7.3	7.3	7.3			7.3	7.3	7.3			7.3	7.3				7.3	7.3				9.0
10.0	7.3	7.3	7.3	6.1	4.5	7.3	7.3	7.3	6.2		7.3	7.3	7.3			7.3	7.3	7.3			7.3	7.3	7.3			10.0
11.0	7.3	7.3	7.3	6.0	4.5	7.3	7.3	7.3	6.1	4.5	7.3	7.3	7.3	6.1	4.5	7.3	7.3	7.3	6.1		7.3	7.3	7.3			11.0
12.0	7.3	7.3	7.3	5.9	4.4	7.3	7.3	7.3	6.0	4.5	7.3	7.3	7.3	6.0	4.5	7.3	7.3	7.3	6.0	4.5	7.3	7.3	7.3	6.1	4.5	12.0
14.0	7.3	7.3	7.2	5.7	4.4	7.3	7.3	7.3	5.8	4.4	7.3	7.3	7.3	5.8	4.4	7.3	7.3	7.3	5.8	4.4	7.3	7.3	7.3	5.9	4.4	14.0
16.0	7.3	7.3	6.8	5.5		7.3	7.3	7.0	5.6		7.3	7.3	7.3	5.7	4.4	7.3	7.3	7.3	5.7	4.4	7.3	7.3	7.3	5.8	4.4	16.0
18.0	7.3	7.3	6.5	5.3		7.3	7.3	6.7	5.4		7.3	7.3	6.9	5.5		7.3	7.3	6.9	5.5		7.3	7.3	7.1	5.6		18.0
20.0	7.3	7.3	6.2	5.2		7.3	7.3	6.4	5.3		7.3	7.3	6.7	5.4		7.3	7.3	6.7	5.4		7.3	7.3	6.9	5.5		20.0
22.0	7.3	7.1	6.0	5.1		7.3	7.3	6.2	5.2		7.3	7.3	6.4	5.3		7.3	7.3	6.4	5.3		7.3	7.3	6.6	5.4		22.0
24.0	7.3	6.7	5.7			7.3	7.1	6.0	5.1		7.3	7.3	6.2	5.2		6.8	6.7	6.2	5.2		7.3	7.3	6.4	5.3		24.0
26.0	7.0	6.3	5.6			7.3	6.7	5.8			7.3	7.2	6.0	5.1		6.2	6.1	6.0	5.1		7.3	7.3	6.2	5.2		26.0
28.0	6.5	6.0	5.4			7.1	6.4	5.6			7.3	6.8	5.8			5.7	5.6	5.6			7.3	7.2	6.0	5.1		28.0
30.0	6.0	5.7	5.3			6.7	6.1	5.4			7.3	6.5	5.6			5.2	5.2	5.2			7.3	6.9	5.8			30.0
32.0	5.7	5.4				6.3	5.8	5.3			6.8	6.2	5.5			4.7	4.7	4.7			6.6	6.5	5.6			32.0
34.0	5.3	5.2				5.9	5.6				6.0	5.9	5.4			4.3	4.3	4.3			6.0	6.1	5.5			34.0
36.0	5.1	5.1				5.3	5.4				5.2	5.3	5.3			3.9	3.9	3.9			5.3	5.4	5.4			36.0
38.0	4.8					4.7	4.7				4.5	4.6				3.5	3.5				4.6	4.7	4.8			38.0
40.0						4.0					3.9	4.0				3.2	3.2				4.0	4.1				40.0
44.0											2.9					2.6					2.9	3.0				44.0
48.0																					2.1					48.0
52.0																										52.0
56.0																										56.0
60.0																										60.0
64.0																										64.0
68.0																										68.0
72.0																										72.0
1	46	46	46	46	46	92	92	92	92	92	92	92	92	92	92	0	0	0	0	0	92	92	92	92	92	1
2	46	46	46	46	46	46	46	46	46	46	92	92	92	92	92	46	46	46	46	46	92	92	92	92	92	2
3	46	46	46	46	46	46	46	46	46	46	46	46	46	46	46	92	92	92	92	92	92	92	92	92	92	3
4	46	46	46	46	46	46	46	46	46	46	46	46	46	46	46	92	92	92	92	92	46	46	46	46	46	4
5	46	46	46	46	46	46	46	46	46	46	46	46	46	46	46	92	92	92	92	92	46	46	46	46	46	5
ID	49	49	49	49	49	50	50	50	50	50	42	42	42	42	42	21	21	21	21	21	38	38	38	38	38	ID
[DEG]	23~83	31~85	46~85	59~85	75~85	30~83	31~85	45~85	60~85	75~85	30~83	31~85	45~85	61~85	74~85	17~83	31~85	45~85	61~85	74~85	18~83	31~85	48~85	60~85	74~85	[DEG]
	1	1	1	1	1	1	1	1	1	1	1	1	1	1	1	1	1	1	1	1	1	1	1	1	1	
	8.7t	8.7t	8.7t	8.7t	8.7t	8.7t	8.7t	8.7t	8.7t	8.7t	8.7t	8.7t	8.7t	8.7t	8.7t	8.7t	8.7t	8.7t	8.7t	8.7t	8.7t	8.7t	8.7t	8.7t	8.7t	

FLJ	1.6m + 7.4m	40.9 t	8.0m x 7.5m	360 °	JPN

m	47.4	47.4	47.4	47.4	47.4	51.7	51.7	51.7	51.7	51.7	51.7	51.7	51.7	51.7	51.7	56.0	56.0	56.0	56.0	56.0	60.0	60.0	60.0	60.0	60.0	m
°	5	15	30	45	60	5	15	30	45	60	5	15	30	45	60	5	15	30	45	60	5	15	30	45	60	°
3.0																										3.0
3.5																										3.5
4.0																										4.0
4.5																										4.5
5.0																										5.0
6.0																										6.0
7.0																										7.0
8.0		7.3																								8.0
9.0	7.3	7.3					7.3					6.4														9.0
10.0	7.3	7.3	7.3			7.3	7.3				6.4	6.4					6.3									10.0
11.0	7.3	7.3	7.3			7.3	7.3	7.3			6.4	6.4	6.4			6.3	6.3					5.3				11.0
12.0	7.3	7.3	7.3	6.1	4.5	7.3	7.3	7.3			6.4	6.4	6.4			6.3	6.3	6.3			5.3	5.3				12.0
14.0	7.3	7.3	7.3	5.9	4.4	7.3	7.3	7.3	6.0	4.5	6.4	6.4	6.4	6.0	4.5	6.3	6.3	6.3	6.0	4.5	5.3	5.3	5.3			14.0
16.0	7.3	7.3	7.3	5.8	4.4	7.3	7.3	7.3	5.8	4.4	6.4	6.4	6.4	5.8	4.4	6.3	6.3	6.3	5.9	4.4	5.3	5.3	5.3	5.3	4.4	16.0
18.0	7.3	7.3	7.1	5.6		7.3	7.3	7.3	5.7	4.3	6.4	6.4	6.4	5.7	4.3	6.3	6.3	6.3	5.7	4.4	5.3	5.3	5.3	5.3	4.4	18.0
20.0	7.3	7.3	6.9	5.5		7.3	7.3	7.0	5.5		6.4	6.4	6.4	5.5		6.3	6.3	6.3	5.6		5.3	5.3	5.3	5.3	4.3	20.0
22.0	7.3	7.3	6.6	5.4		7.3	7.3	6.8	5.4		6.4	6.4	6.4	5.4		6.3	6.3	6.3	5.5		5.3	5.3	5.3	5.3		22.0
24.0	7.3	7.3	6.4	5.3		7.3	7.3	6.5	5.3		6.4	6.4	6.4	5.3		6.3	6.3	6.3	5.4		5.3	5.3	5.3	5.3		24.0
26.0	7.3	7.3	6.2	5.2		7.3	7.3	6.3	5.2		6.4	6.4	6.3	5.2		6.3	6.3	6.3	5.3		5.3	5.3	5.1	5.0		26.0
28.0	7.0	6.8	6.0	5.1		7.3	7.2	6.1	5.2		6.4	6.2	6.1	5.2		6.3	6.3	6.1	5.2		5.1	4.9	4.8	4.7		28.0
30.0	6.5	6.4	5.8			6.9	6.7	6.0	5.1		5.9	5.8	5.7	5.1		6.1	6.0	5.8	5.1		4.7	4.5	4.4	4.4		30.0
32.0	6.1	6.0	5.6			6.4	6.3	5.8			5.5	5.5	5.4			5.8	5.7	5.6	5.1		4.3	4.2	4.1	4.1		32.0
34.0	5.6	5.6	5.5			5.8	5.9	5.7			5.2	5.1	5.0			5.4	5.3	5.3			4.0	3.9	3.8	3.8		34.0
36.0	5.1	5.1	5.2			5.3	5.4	5.4			4.8	4.8	4.7			5.1	5.0	4.9			3.7	3.7	3.6			36.0
38.0	4.7	4.7	4.8			4.7	4.9	5.0			4.4	4.4	4.4			4.7	4.7	4.7			3.5	3.4	3.4			38.0
40.0	4.3	4.3				4.1	4.2	4.4			4.0	4.1	4.0			4.3	4.4	4.4			3.2	3.2	3.1			40.0
44.0	3.5	3.5				3.1	3.2				3.3	3.3				3.3	3.4	3.5			2.8	2.8	2.8			44.0
48.0	2.6					2.2	2.3				2.7	2.7				2.4	2.5				2.3	2.4	2.4			48.0
52.0						1.5					2.1					1.7	1.8				1.7	1.7				52.0
56.0																										56.0
60.0																										60.0
64.0																										64.0
68.0																										68.0
72.0																										72.0
1	46	46	46	46	46	92	92	92	92	92	46	46	46	46	46	92	92	92	92	92	100	100	100	100	100	1
2	92	92	92	92	92	92	92	92	92	92	92	92	92	92	92	92	92	92	92	92	100	100	100	100	100	2
3	92	92	92	92	92	92	92	92	92	92	92	92	92	92	92	92	92	92	92	92	100	100	100	100	100	3
4	92	92	92	92	92	92	92	92	92	92	92	92	92	92	92	92	92	92	92	92	100	100	100	100	100	4
5	46	46	46	46	46	46	46	46	46	46	92	92	92	92	92	92	92	92	92	92	100	100	100	100	100	5
ID	31	31	31	31	31	32	32	32	32	32	23	23	23	23	23	24	24	24	24	24	16	16	16	16	16	ID
[DEG]	19~83	31~85	48~85	59~85	74~85	31~83	32~85	47~85	61~85	74~85	20~83	32~85	47~85	61~85	74~85	39~83	39~85	46~85	60~85	74~85	44~83	45~85	45~85	60~85	74~85	[DEG]
	1	1	1	1	1	1	1	1	1	1	1	1	1	1	1	1	1	1	1	1	1	1	1	1	1	
	8.7t	8.7t	8.7t	8.7t	8.7t	8.7t	8.7t	8.7t	8.7t	8.7t	8.7t	8.7t	8.7t	8.7t	8.7t	8.7t	8.7t	8.7t	8.7t	8.7t	8.7t	8.7t	8.7t	8.7t	8.7t	

FLJ	1.6m + 12.4m	40.9 t	8.0m x 7.5m	360 °	JPN

m	12.8	12.8	12.8	12.8	12.8	25.8	25.8	25.8	25.8	25.8	30.1	30.1	30.1	30.1	30.1	30.1	30.1	30.1	30.1	30.1	34.4	34.4	34.4	34.4	34.4	m
°	5	15	30	45	60	5	15	30	45	60	5	15	30	45	60	5	15	30	45	60	5	15	30	45	60	°
3.0																										3.0
3.5	4.3																									3.5
4.0	4.3																									4.0
4.5	4.3																									4.5
5.0	4.3																									5.0
6.0	4.3	4.3				4.3																				6.0
7.0	4.3	4.3				4.3	4.3				4.3					4.3										7.0
8.0	4.3	4.3				4.3	4.3				4.3	4.3				4.3	4.3				4.3	4.3				8.0
9.0	4.3	4.3	4.3			4.3	4.3				4.3	4.3				4.3	4.3				4.3	4.3				9.0
10.0	4.3	4.3	4.1			4.3	4.3	4.3			4.3	4.3				4.3	4.3				4.3	4.3				10.0
11.0	4.3	4.3	3.9	3.2		4.3	4.3	4.3			4.3	4.3	4.3			4.3	4.3	4.3			4.3	4.3	4.3			11.0
12.0	4.3	4.3	3.7	3.1		4.3	4.3	4.3	3.3		4.3	4.3	4.3			4.3	4.3	4.3			4.3	4.3	4.3			12.0
14.0	4.1	3.8	3.4	2.9		4.3	4.3	4.0	3.2	2.4	4.3	4.3	4.2	3.2	2.4	4.3	4.3	4.2	3.2	2.4	4.3	4.3	4.3	3.3		14.0
16.0	3.6	3.4	3.1	2.7		4.3	4.3	3.7	3.0	2.4	4.3	4.3	3.9	3.1	2.4	4.3	4.3	3.9	3.1	2.4	4.3	4.3	4.0	3.1	2.4	16.0
18.0	3.2	3.1	2.9			4.3	4.2	3.5	2.9		4.3	4.3	3.7	3.0		4.3	4.3	3.7	3.0		4.3	4.3	3.8	3.0	2.3	18.0
20.0	2.9	2.9				4.3	3.9	3.3	2.8		4.3	4.2	3.5	2.9		4.3	4.2	3.5	2.9		4.3	4.3	3.6	2.9		20.0
22.0	2.6	2.7				4.0	3.6	3.1	2.7		4.3	3.9	3.3	2.8		4.3	3.9	3.3	2.8		4.3	4.2	3.4	2.8		22.0
24.0						3.7	3.4	3.0			4.1	3.7	3.1	2.7		4.1	3.7	3.1	2.7		4.3	3.9	3.3	2.8		24.0
26.0						3.4	3.2	2.9			3.8	3.4	3.0			3.8	3.4	3.0			4.1	3.7	3.1	2.7		26.0
28.0						3.1	3.0	2.8			3.5	3.3	2.9			3.5	3.3	2.9			3.8	3.5	3.0			28.0
30.0						2.9	2.8				3.2	3.1	2.8			3.2	3.1	2.8			3.6	3.3	2.9			30.0
32.0						2.7	2.7				3.0	2.9	2.7			3.0	2.9	2.7			3.3	3.1	2.8			32.0
34.0						2.5					2.8	2.8				2.8	2.8				3.1	3.0	2.7			34.0
36.0											2.7	2.7				2.7	2.7				3.0	2.9				36.0
38.0											2.5					2.5					2.8	2.8				38.0
40.0																					2.7	2.7				40.0
44.0																										44.0
48.0																										48.0
52.0																										52.0
56.0																										56.0
60.0																										60.0
64.0																										64.0
68.0																										68.0
72.0																										72.0
1	0	0	0	0		46	46	46	46	46	92	92	92	92	92	46	46	46	46	46	92	92	92	92	92	1
2	0	0	0	0		46	46	46	46	46	46	46	46	46	46	46	46	46	46	46	46	46	46	46	46	2
3	0	0	0	0		46	46	46	46	46	46	46	46	46	46	46	46	46	46	46	46	46	46	46	46	3
4	0	0	0	0		0	0	0	0	0	0	0	0	0	0	46	46	46	46	46	46	46	46	46	46	4
5	0	0	0	0		0	0	0	0	0	0	0	0	0	0	0	0	0	0	0	0	0	0	0	0	5
ID	1	1	1	1		66	66	66	66	66	67	67	67	67	67	54	54	54	54	54	55	55	55	55	55	ID
[DEG]	0~83	0~85	0~85	0~85		25~83	27~85	47~85	58~85	76~85	18~83	28~85	46~85	59~85	75~85	17~83	27~85	45~85	59~85	75~85	19~83	33~85	44~85	60~85	74~85	[DEG]
	1	1	1	1		1	1	1	1	1	1	1	1	1	1	1	1	1	1	1	1	1	1	1	1	
	8.7t	8.7t	8.7t	8.7t		8.7t	8.7t	8.7t	8.7t	8.7t	8.7t	8.7t	8.7t	8.7t	8.7t	8.7t	8.7t	8.7t	8.7t	8.7t	8.7t	8.7t	8.7t	8.7t	8.7t	

フルオートラフィングジブ

FLJ	1.6m + 12.4m	40.9 t	8.0m x 7.5m	360 °	JPN

m	34.4	34.4	34.4	34.4	34.4	38.7	38.7	38.7	38.7	38.7	43.0	43.0	43.0	43.0	43.0	43.0	43.0	43.0	43.0	43.0	47.4	47.4	47.4	47.4	47.4	m
°	5	15	30	45	60	5	15	30	45	60	5	15	30	45	60	5	15	30	45	60	5	15	30	45	60	°
3.0																										3.0
3.5																										3.5
4.0																										4.0
4.5																										4.5
5.0																										5.0
6.0																										6.0
7.0	4.3																									7.0
8.0	4.3	4.3				4.3																				8.0
9.0	4.3	4.3				4.3	4.3				4.3					4.3										9.0
10.0	4.3	4.3				4.3	4.3				4.3	4.3				4.3	4.3				4.3					10.0
11.0	4.3	4.3	4.3			4.3	4.3				4.3	4.3				4.3	4.3				4.3	4.3				11.0
12.0	4.3	4.3	4.3			4.3	4.3	4.3			4.3	4.3				4.3	4.3				4.3	4.3				12.0
14.0	4.3	4.3	4.2	3.3		4.3	4.3	4.2	3.3		4.3	4.3	4.2			4.3	4.3	4.1			4.3	4.3	4.2			14.0
16.0	4.3	4.3	4.0	3.1	2.4	4.3	4.3	4.0	3.2	2.4	4.3	4.3	4.0	3.2	2.4	4.3	4.3	3.9	3.2		4.3	4.3	4.0	3.3		16.0
18.0	4.3	4.3	3.8	3.0	2.3	4.3	4.3	3.9	3.1	2.3	4.3	4.3	3.9	3.1	2.4	4.3	4.3	3.7	3.1	2.4	4.3	4.3	3.8	3.2	2.4	18.0
20.0	4.3	4.3	3.6	2.9		4.3	4.3	3.7	3.0	2.3	4.3	4.3	3.7	3.0	2.3	4.3	4.3	3.6	3.0	2.3	4.3	4.3	3.7	3.1	2.3	20.0
22.0	4.3	4.2	3.4	2.8		4.3	4.3	3.6	2.9		4.3	4.3	3.6	2.9		4.3	4.2	3.5	2.9		4.3	4.3	3.6	3.0	2.3	22.0
24.0	4.3	3.9	3.3	2.8		4.3	4.1	3.4	2.8		4.3	4.2	3.5	2.9		4.3	4.0	3.4	2.9		4.3	4.2	3.4	2.9		24.0
26.0	4.1	3.7	3.1	2.7		4.3	3.9	3.3	2.7		4.3	4.0	3.4	2.8		4.3	3.8	3.3	2.8		4.3	4.0	3.4	2.8		26.0
28.0	3.8	3.5	3.0			4.2	3.7	3.1	2.7		4.3	3.8	3.3	2.7		4.2	3.7	3.2	2.7		4.3	3.8	3.3	2.8		28.0
30.0	3.6	3.3	2.9			3.9	3.5	3.0			4.2	3.7	3.1	2.7		4.0	3.5	3.1	2.7		4.3	3.7	3.2	2.7		30.0
32.0	3.3	3.1	2.8			3.7	3.4	2.9			4.0	3.5	3.0			3.9	3.4	3.0			4.1	3.5	3.1	2.7		32.0
34.0	3.1	3.0	2.7			3.4	3.2	2.8			3.7	3.4	2.9			3.7	3.3	2.9			3.9	3.4	3.0	2.6		34.0
36.0	3.0	2.9				3.2	3.1	2.8			3.5	3.2	2.9			3.5	3.2	2.8			3.8	3.3	2.9			36.0
38.0	2.8	2.8				3.1	2.9	2.7			3.3	3.1	2.8			3.3	3.1	2.8			3.6	3.2	2.9			38.0
40.0	2.7	2.7				2.9	2.8				3.2	3.0	2.7			3.2	3.0	2.7			3.4	3.1	2.8			40.0
44.0						2.6	2.6				2.9	2.8				2.7	2.8				3.1	2.9	2.7			44.0
48.0											2.6	2.6				2.2	2.3				2.7	2.8				48.0
52.0																					1.9	2.0				52.0
56.0																										56.0
60.0																										60.0
64.0																										64.0
68.0																										68.0
72.0																										72.0
1	46	46	46	46	46	92	92	92	92	92	92	92	92	92	92	0	0	0	0	0	92	92	92	92	92	1
2	46	46	46	46	46	46	46	46	46	46	92	92	92	92	92	46	46	46	46	46	92	92	92	92	92	2
3	46	46	46	46	46	46	46	46	46	46	46	46	46	46	46	92	92	92	92	92	92	92	92	92	92	3
4	46	46	46	46	46	46	46	46	46	46	46	46	46	46	46	92	92	92	92	92	46	46	46	46	46	4
5	46	46	46	46	46	46	46	46	46	46	46	46	46	46	46	92	92	92	92	92	46	46	46	46	46	5
ID	49	49	49	49	49	50	50	50	50	50	42	42	42	42	42	21	21	21	21	21	38	38	38	38	38	ID
[DEG]	18~83	33~85	44~85	60~85	74~85	20~83	33~85	43~85	58~85	76~85	21~83	33~85	43~85	59~85	75~85	22~83	34~85	43~85	59~85	75~85	22~83	33~85	49~85	60~85	75~85	[DEG]
	1	1	1	1	1	1	1	1	1	1	1	1	1	1	1	1	1	1	1	1	1	1	1	1	1	
	8.7t	8.7t	8.7t	8.7t	8.7t	8.7t	8.7t	8.7t	8.7t	8.7t	8.7t	8.7t	8.7t	8.7t	8.7t	8.7t	8.7t	8.7t	8.7t	8.7t	8.7t	8.7t	8.7t	8.7t	8.7t	

m	47.4	47.4	47.4	47.4	47.4	51.7	51.7	51.7	51.7	51.7	51.7	51.7	51.7	51.7	51.7	56.0	56.0	56.0	56.0	56.0	60.0	60.0	60.0	60.0	60.0	m
°	5	15	30	45	60	5	15	30	45	60	5	15	30	45	60	5	15	30	45	60	5	15	30	45	60	°
3.0																										3.0
3.5																										3.5
4.0																										4.0
4.5																										4.5
5.0																										5.0
6.0																										6.0
7.0																										7.0
8.0																										8.0
9.0																										9.0
10.0	4.3																									10.0
11.0	4.3	4.3				4.3					4.3															11.0
12.0	4.3	4.3				4.3	4.3				4.3	4.3				4.3										12.0
14.0	4.3	4.3	4.1			4.3	4.3				4.3	4.3				4.3	4.3				3.3	3.3				14.0
16.0	4.3	4.3	4.0	3.3		4.3	4.3	3.9			4.3	4.3	3.9			4.3	4.3	3.8			3.3	3.3				16.0
18.0	4.3	4.3	3.8	3.2	2.4	4.3	4.3	3.8	3.2	2.4	4.3	4.3	3.7	3.2	2.4	4.3	4.3	3.7	3.2		3.3	3.3	3.3			18.0
20.0	4.3	4.3	3.7	3.1	2.3	4.3	4.3	3.7	3.1	2.3	4.3	4.3	3.6	3.1	2.3	4.3	4.3	3.6	3.1	2.3	3.3	3.3	3.3	3.1	2.3	20.0
22.0	4.3	4.3	3.5	3.0	2.3	4.3	4.3	3.5	3.0	2.3	4.3	4.2	3.5	3.0	2.3	4.3	4.2	3.5	3.1	2.3	3.3	3.3	3.3	3.0	2.3	22.0
24.0	4.3	4.1	3.4	2.9		4.3	4.1	3.4	2.9		4.3	4.0	3.4	2.9		4.3	4.0	3.4	3.0	2.3	3.3	3.3	3.3	3.0	2.3	24.0
26.0	4.3	3.9	3.3	2.8		4.3	3.9	3.3	2.9		4.3	3.9	3.2	2.9		4.3	3.9	3.2	2.9		3.3	3.3	3.2	2.9		26.0
28.0	4.3	3.8	3.2	2.8		4.3	3.8	3.2	2.8		4.3	3.7	3.2	2.8		4.3	3.7	3.2	2.9		3.3	3.3	3.1	2.8		28.0
30.0	4.2	3.6	3.1	2.7		4.2	3.7	3.1	2.8		4.1	3.6	3.1	2.8		4.1	3.6	3.1	2.8		3.3	3.3	3.0	2.8		30.0
32.0	4.0	3.5	3.0	2.7		4.1	3.5	3.1	2.7		4.0	3.5	3.0	2.7		4.0	3.5	3.0	2.7		3.3	3.3	3.0	2.7		32.0
34.0	3.9	3.4	3.0	2.6		3.9	3.4	3.0	2.7		3.8	3.3	2.9	2.7		3.9	3.4	2.9	2.7		3.3	3.3	2.9	2.7		34.0
36.0	3.7	3.3	2.9			3.8	3.3	2.9	2.6		3.7	3.2	2.9	2.6		3.7	3.3	2.9	2.7		3.3	3.2	2.8	2.6		36.0
38.0	3.6	3.2	2.8			3.6	3.2	2.8			3.6	3.1	2.8			3.6	3.2	2.8	2.6		3.1	3.1	2.8	2.6		38.0
40.0	3.4	3.1	2.8			3.5	3.1	2.8			3.4	3.1	2.7			3.5	3.1	2.7			2.9	2.9	2.7	2.6		40.0
44.0	3.1	2.9	2.7			3.3	3.0	2.7			3.2	2.9	2.6			3.1	2.9	2.6			2.6	2.5	2.5			44.0
48.0	2.8	2.8				2.8	2.8				2.9	2.8				2.8	2.8	2.6			2.3	2.2	2.2			48.0
52.0	2.4	2.5				2.0	2.1				2.4	2.5				2.2	2.3				2.0	2.0	2.0			52.0
56.0						1.4					1.9					1.6	1.7				1.5	1.6				56.0
60.0																										60.0
64.0																										64.0
68.0																										68.0
72.0																										72.0
1	46	46	46	46	46	92	92	92	92	92	46	46	46	46	46	92	92	92	92	92	100	100	100	100	100	1
2	92	92	92	92	92	92	92	92	92	92	92	92	92	92	92	92	92	92	92	92	100	100	100	100	100	2
3	92	92	92	92	92	92	92	92	92	92	92	92	92	92	92	92	92	92	92	92	100	100	100	100	100	3
4	92	92	92	92	92	92	92	92	92	92	92	92	92	92	92	92	92	92	92	92	100	100	100	100	100	4
5	46	46	46	46	46	46	46	46	46	46	92	92	92	92	92	92	92	92	92	92	100	100	100	100	100	5
ID	31	31	31	31	31	32	32	32	32	32	23	23	23	23	23	24	24	24	24	24	16	16	16	16	16	ID
[DEG]	22~83	34~85	49~85	60~85	75~85	32~83	34~85	48~85	59~85	74~85	23~83	34~85	48~85	59~85	74~85	40~83	41~85	48~85	58~85	74~85	45~83	46~85	47~85	61~85	74~85	[DEG]
	1	1	1	1	1	1	1	1	1	1	1	1	1	1	1	1	1	1	1	1	1	1	1	1	1	
	8.7t	8.7t	8.7t	8.7t	8.7t	8.7t	8.7t	8.7t	8.7t	8.7t	8.7t	8.7t	8.7t	8.7t	8.7t	8.7t	8.7t	8.7t	8.7t	8.7t	8.7t	8.7t	8.7t	8.7t	8.7t	

FLJ	1.6m + 17.4m	40.9 t	8.0m x 7.5m	360 °	JPN

m	12.8	12.8	12.8	12.8	12.8	25.8	25.8	25.8	25.8	25.8	30.1	30.1	30.1	30.1	30.1	30.1	30.1	30.1	30.1	30.1	34.4	34.4	34.4	34.4	34.4	m
°	5	15	30	45	60	5	15	30	45	60	5	15	30	45	60	5	15	30	45	60	5	15	30	45	60	°
3.0																										3.0
3.5																										3.5
4.0																										4.0
4.5																										4.5
5.0	3.3																									5.0
6.0	3.3																									6.0
7.0	3.3																									7.0
8.0	3.3	3.3				3.3					3.3					3.3										8.0
9.0	3.3	3.3				3.3	3.3				3.3					3.3					3.3					9.0
10.0	3.3	3.3				3.3	3.3				3.3	3.3				3.3	3.3				3.3					10.0
11.0	3.3	3.3				3.3	3.3				3.3	3.3				3.3	3.3				3.3	3.3				11.0
12.0	3.3	3.2	2.6			3.3	3.3				3.3	3.3				3.3	3.3				3.3	3.3				12.0
14.0	3.3	2.9	2.4			3.3	3.2	2.6			3.3	3.3	2.7			3.3	3.2	2.6			3.3	3.3				14.0
16.0	2.9	2.6	2.2	1.8		3.3	3.0	2.5			3.3	3.1	2.5			3.3	3.0	2.5			3.3	3.1	2.5			16.0
18.0	2.5	2.3	2.0	1.7		3.3	2.8	2.3	1.9		3.3	2.9	2.4	1.9		3.3	2.9	2.4	1.9		3.3	2.9	2.4	1.9		18.0
20.0	2.3	2.1	1.8	1.6		3.1	2.6	2.2	1.8		3.2	2.7	2.2	1.8	1.5	3.2	2.7	2.2	1.8	1.5	3.3	2.8	2.3	1.8	1.5	20.0
22.0	2.0	1.9	1.7			2.9	2.5	2.0	1.7		3.0	2.6	2.1	1.7	1.5	3.0	2.6	2.1	1.7	1.5	3.1	2.6	2.2	1.8	1.5	22.0
24.0	1.8	1.8	1.6			2.7	2.4	1.9	1.6		2.8	2.5	2.0	1.7		2.8	2.4	2.0	1.7		2.9	2.5	2.1	1.7		24.0
26.0	1.7	1.6				2.5	2.2	1.8	1.6		2.7	2.3	1.9	1.6		2.6	2.3	1.9	1.6		2.7	2.4	2.0	1.6		26.0
28.0	1.5					2.3	2.1	1.7	1.5		2.5	2.2	1.8	1.6		2.5	2.2	1.8	1.6		2.6	2.3	1.9	1.6		28.0
30.0						2.1	1.9	1.7			2.4	2.1	1.7	1.5		2.4	2.1	1.7	1.5		2.5	2.2	1.8	1.5		30.0
32.0						2.0	1.8	1.6			2.2	2.0	1.7			2.2	2.0	1.7			2.4	2.1	1.7	1.5		32.0
34.0						1.8	1.7				2.0	1.9	1.6			2.0	1.9	1.6			2.3	2.0	1.7			34.0
36.0						1.7	1.7				1.9	1.8	1.6			1.9	1.8	1.6			2.1	1.9	1.6			36.0
38.0						1.6	1.6				1.8	1.7				1.8	1.7				2.0	1.8	1.6			38.0
40.0						1.5					1.7	1.6				1.7	1.6				1.9	1.7				40.0
44.0											1.5					1.5					1.7	1.6				44.0
48.0																					1.5					48.0
52.0																										52.0
56.0																										56.0
60.0																										60.0
64.0																										64.0
68.0																										68.0
72.0																										72.0
1	0	0	0	0		46	46	46	46		92	92	92	92	92	46	46	46	46	46	92	92	92	92	92	1
2	0	0	0	0		46	46	46	46		46	46	46	46	46	46	46	46	46	46	46	46	46	46	46	2
3	0	0	0	0		46	46	46	46		46	46	46	46	46	46	46	46	46	46	46	46	46	46	46	3
4	0	0	0	0		0	0	0	0		0	0	0	0	0	46	46	46	46	46	46	46	46	46	46	4
5	0	0	0	0		0	0	0	0		0	0	0	0	0	0	0	0	0	0	0	0	0	0	0	5
ID	1	1	1	1		66	66	66	66		67	67	67	67	67	54	54	54	54	54	55	55	55	55	55	ID
[DEG]	0~83	0~85	0~85	0~85		20~83	30~85	44~85	60~85		21~83	35~85	43~85	57~85	73~85	21~83	35~85	43~85	57~85	73~85	22~83	35~85	46~85	58~85	75~85	[DEG]
	1	1	1	1		1	1	1	1		1	1	1	1	1	1	1	1	1	1	1	1	1	1	1	
	8.7t	8.7t	8.7t	8.7t		8.7t	8.7t	8.7t	8.7t		8.7t	8.7t	8.7t	8.7t	8.7t	8.7t	8.7t	8.7t	8.7t	8.7t	8.7t	8.7t	8.7t	8.7t	8.7t	

m	34.4	34.4	34.4	34.4	34.4	38.7	38.7	38.7	38.7	38.7	43.0	43.0	43.0	43.0	43.0	43.0	43.0	43.0	43.0	43.0	47.4	47.4	47.4	47.4	47.4	m
°	5	15	30	45	60	5	15	30	45	60	5	15	30	45	60	5	15	30	45	60	5	15	30	45	60	°
3.0																										3.0
3.5																										3.5
4.0																										4.0
4.5																										4.5
5.0																										5.0
6.0																										6.0
7.0																										7.0
8.0																										8.0
9.0	3.3																									9.0
10.0	3.3					3.3																				10.0
11.0	3.3	3.3				3.3					3.3					2.9										11.0
12.0	3.3	3.3				3.3	3.3				3.3	3.3				2.9					3.2					12.0
14.0	3.3	3.2				3.3	3.3				3.3	3.2				2.9	2.9				3.2	3.2				14.0
16.0	3.3	3.0	2.5			3.3	3.1	2.5			3.3	3.1				2.9	2.9				3.2	3.1				16.0
18.0	3.3	2.9	2.4	1.9		3.3	2.9	2.4			3.3	2.9	2.4			2.9	2.8	2.3			3.2	2.9	2.4			18.0
20.0	3.2	2.7	2.3	1.8	1.5	3.3	2.8	2.3	1.9		3.3	2.8	2.3	1.9		2.9	2.7	2.2	1.9		3.2	2.8	2.3			20.0
22.0	3.0	2.6	2.2	1.8	1.5	3.1	2.6	2.2	1.8	1.5	3.1	2.7	2.2	1.8	1.5	2.9	2.6	2.2	1.8	1.5	3.1	2.7	2.2	1.8		22.0
24.0	2.9	2.5	2.1	1.7		2.9	2.5	2.1	1.7	1.5	3.0	2.5	2.1	1.8	1.5	2.9	2.5	2.1	1.8	1.5	3.0	2.5	2.1	1.8	1.5	24.0
26.0	2.7	2.4	2.0	1.6		2.8	2.4	2.1	1.7		2.8	2.4	2.1	1.7		2.7	2.4	2.0	1.7		2.9	2.4	2.1	1.7	1.4	26.0
28.0	2.6	2.3	1.9	1.6		2.7	2.3	2.0	1.6		2.7	2.3	2.0	1.6		2.6	2.3	2.0	1.6		2.7	2.4	2.0	1.7		28.0
30.0	2.5	2.2	1.8	1.5		2.5	2.2	1.9	1.6		2.6	2.3	1.9	1.6		2.5	2.2	1.9	1.6		2.6	2.3	1.9	1.6		30.0
32.0	2.4	2.1	1.7	1.5		2.4	2.1	1.8	1.5		2.5	2.2	1.9	1.6		2.4	2.1	1.8	1.6		2.5	2.2	1.9	1.6		32.0
34.0	2.3	2.0	1.7			2.3	2.1	1.7	1.5		2.4	2.1	1.8	1.5		2.3	2.0	1.8	1.5		2.4	2.1	1.8	1.6		34.0
36.0	2.1	1.9	1.6			2.2	2.0	1.7			2.3	2.0	1.7	1.5		2.2	2.0	1.7	1.5		2.3	2.0	1.8	1.5		36.0
38.0	2.0	1.8	1.6			2.2	1.9	1.6			2.2	2.0	1.7			2.2	1.9	1.7			2.2	2.0	1.7	1.5		38.0
40.0	1.9	1.7				2.0	1.9	1.6			2.1	1.9	1.6			2.1	1.9	1.6			2.2	1.9	1.7			40.0
44.0	1.7	1.6				1.8	1.7				2.0	1.8	1.6			2.0	1.8	1.6			2.0	1.8	1.6			44.0
48.0	1.5					1.7	1.6				1.8	1.7				1.8	1.7				1.9	1.7	1.5			48.0
52.0						1.5					1.7	1.6				1.7	1.6				1.8	1.7				52.0
56.0											1.5					1.5					1.6	1.6				56.0
60.0																					1.2					60.0
64.0																										64.0
68.0																										68.0
72.0																										72.0
1	46	46	46	46	46	92	92	92	92	92	92	92	92	92	92	0	0	0	0	0	92	92	92	92	92	1
2	46	46	46	46	46	46	46	46	46	46	92	92	92	92	92	46	46	46	46	46	92	92	92	92	92	2
3	46	46	46	46	46	46	46	46	46	46	46	46	46	46	46	92	92	92	92	92	92	92	92	92	92	3
4	46	46	46	46	46	46	46	46	46	46	46	46	46	46	46	92	92	92	92	92	46	46	46	46	46	4
5	46	46	46	46	46	46	46	46	46	46	46	46	46	46	46	92	92	92	92	92	46	46	46	46	46	5
ID	49	49	49	49	49	50	50	50	50	50	42	42	42	42	42	21	21	21	21	21	38	38	38	38	38	ID
[DEG]	22~83	35~85	46~85	58~85	75~85	23~83	35~85	44~85	59~85	74~85	24~83	35~85	44~85	57~85	74~85	24~83	26~85	44~85	58~85	74~85	25~83	35~85	44~85	61~85	73~85	[DEG]
	1	1	1	1	1	1	1	1	1	1	1	1	1	1	1	1	1	1	1	1	1	1	1	1	1	
	8.7t	8.7t	8.7t	8.7t	8.7t	8.7t	8.7t	8.7t	8.7t	8.7t	8.7t	8.7t	8.7t	8.7t	8.7t	8.7t	8.7t	8.7t	8.7t	8.7t	8.7t	8.7t	8.7t	8.7t	8.7t	

フルオートラフィングジブ

FLJ	1.6m + 17.4m	40.9 t	8.0m x 7.5m	360 °	JPN

m	47.4	47.4	47.4	47.4	47.4	51.7	51.7	51.7	51.7	51.7	51.7	51.7	51.7	51.7	51.7	56.0	56.0	56.0	56.0	56.0	60.0	60.0	60.0	60.0	60.0	m
°	5	15	30	45	60	5	15	30	45	60	5	15	30	45	60	5	15	30	45	60	5	15	30	45	60	°
3.0																										3.0
3.5																										3.5
4.0																										4.0
4.5																										4.5
5.0																										5.0
6.0																										6.0
7.0																										7.0
8.0																										8.0
9.0																										9.0
10.0																										10.0
11.0																										11.0
12.0	3.1																									12.0
14.0	3.1	3.1				3.2	3.1				3.2	3.0				2.9										14.0
16.0	3.1	3.0				3.2	3.0				3.1	2.9				2.9	2.9				2.8	2.7				16.0
18.0	3.1	2.9	2.4			3.2	2.9				3.1	2.8				2.9	2.8				2.8	2.6				18.0
20.0	3.1	2.7	2.3			3.1	2.7	2.3			3.0	2.7	2.2			2.9	2.7	2.2			2.8	2.6				20.0
22.0	3.1	2.6	2.2	1.8		3.1	2.6	2.2	1.8		2.9	2.6	2.2	1.8		2.9	2.6	2.2			2.7	2.5	2.1			22.0
24.0	2.9	2.5	2.1	1.8	1.5	2.9	2.5	2.1	1.8	1.5	2.9	2.5	2.1	1.8	1.5	2.8	2.5	2.1	1.8		2.7	2.5	2.1	1.8		24.0
26.0	2.8	2.4	2.0	1.7	1.4	2.8	2.4	2.1	1.7	1.4	2.8	2.4	2.0	1.7	1.4	2.8	2.4	2.0	1.8	1.4	2.6	2.4	2.0	1.8	1.4	26.0
28.0	2.7	2.3	2.0	1.7		2.7	2.3	2.0	1.7	1.4	2.7	2.3	2.0	1.7	1.4	2.7	2.3	2.0	1.7	1.4	2.6	2.3	2.0	1.7	1.4	28.0
30.0	2.6	2.2	1.9	1.6		2.6	2.3	1.9	1.6		2.6	2.2	1.9	1.6		2.6	2.2	1.9	1.7		2.5	2.2	1.9	1.7	1.4	30.0
32.0	2.5	2.2	1.9	1.6		2.5	2.2	1.9	1.6		2.5	2.2	1.9	1.6		2.5	2.2	1.9	1.6		2.5	2.2	1.8	1.6		32.0
34.0	2.4	2.1	1.8	1.6		2.4	2.1	1.8	1.6		2.4	2.1	1.8	1.6		2.4	2.1	1.8	1.6		2.4	2.1	1.8	1.6		34.0
36.0	2.3	2.0	1.8	1.5		2.3	2.0	1.8	1.5		2.3	2.0	1.7	1.5		2.3	2.0	1.8	1.6		2.3	2.0	1.7	1.6		36.0
38.0	2.2	2.0	1.7	1.5		2.3	2.0	1.7	1.5		2.2	2.0	1.7	1.5		2.2	2.0	1.7	1.5		2.2	2.0	1.7	1.5		38.0
40.0	2.1	1.9	1.7			2.2	1.9	1.7	1.5		2.1	1.9	1.7	1.5		2.2	1.9	1.7	1.5		2.2	1.9	1.7	1.5		40.0
44.0	2.0	1.8	1.6			2.1	1.8	1.6			2.0	1.8	1.6			2.0	1.8	1.6			2.0	1.8	1.6	1.5		44.0
48.0	1.9	1.7	1.5			1.9	1.7	1.6			1.9	1.7	1.5			1.9	1.7	1.5			1.9	1.7	1.5			48.0
52.0	1.8	1.7				1.8	1.7	1.5			1.8	1.6	1.5			1.8	1.6	1.5			1.8	1.6	1.5			52.0
56.0	1.6	1.6				1.7	1.6				1.7	1.6				1.7	1.6				1.7	1.6	1.4			56.0
60.0	1.5					1.3	1.4				1.6	1.5				1.4	1.5				1.4	1.5				60.0
64.0											1.3															64.0
68.0																										68.0
72.0																										72.0
1	46	46	46	46	46	92	92	92	92	92	46	46	46	46	46	92	92	92	92	92	100	100	100	100	100	1
2	92	92	92	92	92	92	92	92	92	92	92	92	92	92	92	92	92	92	92	92	100	100	100	100	100	2
3	92	92	92	92	92	92	92	92	92	92	92	92	92	92	92	92	92	92	92	92	100	100	100	100	100	3
4	92	92	92	92	92	92	92	92	92	92	92	92	92	92	92	92	92	92	92	92	100	100	100	100	100	4
5	46	46	46	46	46	46	46	46	46	46	92	92	92	92	92	92	92	92	92	92	100	100	100	100	100	5
ID	31	31	31	31	31	32	32	32	32	32	23	23	23	23	23	24	24	24	24	24	16	16	16	16	16	ID
[DEG]	25~83	26~85	43~85	61~85	73~85	34~83	36~85	43~85	60~85	73~85	26~83	27~85	43~85	60~85	73~85	40~83	42~85	43~85	59~85	73~85	45~83	47~85	43~85	58~85	73~85	[DEG]
	1	1	1	1	1	1	1	1	1	1	1	1	1	1	1	1	1	1	1	1	1	1	1	1	1	
	8.7t	8.7t	8.7t	8.7t	8.7t	8.7t	8.7t	8.7t	8.7t	8.7t	8.7t	8.7t	8.7t	8.7t	8.7t	8.7t	8.7t	8.7t	8.7t	8.7t	8.7t	8.7t	8.7t	8.7t	8.7t	

FLJ	1.6m + 7.4m	40.9 t	8.0m x 6.2m	360 °	JPN

m	12.8	12.8	12.8	12.8	12.8	25.8	25.8	25.8	25.8	25.8	30.1	30.1	30.1	30.1	30.1	30.1	30.1	30.1	30.1	30.1	34.4	34.4	34.4	34.4	34.4	m
°	5	15	30	45	60	5	15	30	45	60	5	15	30	45	60	5	15	30	45	60	5	15	30	45	60	°
3.0	7.3																									3.0
3.5	7.3	7.3																								3.5
4.0	7.3	7.3				7.3																				4.0
4.5	7.3	7.3				7.3																				4.5
5.0	7.3	7.3				7.3	7.3				7.3					7.3										5.0
6.0	7.3	7.3	7.3			7.3	7.3				7.3	7.3				7.3	7.3				7.3	7.3				6.0
7.0	7.3	7.3	7.3	5.9		7.3	7.3	7.3			7.3	7.3	7.3			7.3	7.3	7.3			7.3	7.3				7.0
8.0	7.3	7.3	7.0	5.7		7.3	7.3	7.3	6.2		7.3	7.3	7.3			7.3	7.3	7.3			7.3	7.3	7.3			8.0
9.0	7.3	7.3	6.6	5.5		7.3	7.3	7.3	6.0	4.5	7.3	7.3	7.3	6.1		7.3	7.3	7.3	6.1		7.3	7.3	7.3	6.2		9.0
10.0	7.3	7.3	6.3	5.4		7.3	7.3	7.3	5.9	4.5	7.3	7.3	7.3	6.0	4.5	7.3	7.3	7.3	6.0	4.5	7.3	7.3	7.3	6.1	4.5	10.0
11.0	7.3	7.0	6.1	5.2		7.3	7.3	7.3	5.8	4.4	7.3	7.3	7.3	5.9	4.5	7.3	7.3	7.3	5.9	4.5	7.3	7.3	7.3	6.0	4.5	11.0
12.0	7.1	6.5	5.8			7.3	7.3	7.0	5.6		7.3	7.3	7.3	5.8	4.4	7.3	7.3	7.3	5.8	4.4	7.3	7.3	7.3	5.9	4.4	12.0
14.0	6.1	5.9	5.4			7.3	7.3	6.6	5.4		7.3	7.3	6.9	5.6		7.3	7.3	6.9	5.6		7.3	7.3	7.2	5.7	4.4	14.0
16.0	5.4	5.3				7.3	7.3	6.2	5.2		7.3	7.3	6.5	5.4		7.3	7.3	6.5	5.4		7.3	7.3	6.8	5.5		16.0
18.0	4.9					7.3	6.9	5.9	5.1		7.3	7.3	6.2	5.2		7.3	7.3	6.2	5.2		7.3	7.3	6.5	5.3		18.0
20.0						7.1	6.4	5.7			7.3	7.0	5.9	5.1		7.3	7.0	5.9	5.1		7.3	7.3	6.2	5.2		20.0
22.0						6.5	6.0	5.4			7.3	6.6	5.7			7.3	6.6	5.7			7.3	7.1	6.0	5.1		22.0
24.0						6.0	5.7	5.3			6.8	6.2	5.5			6.8	6.2	5.5			7.3	6.7	5.7			24.0
26.0						5.5	5.4				6.2	5.8	5.3			6.2	5.8	5.3			7.0	6.3	5.6			26.0
28.0						5.1	5.1				5.8	5.5				5.8	5.5				6.5	6.0	5.4			28.0
30.0						4.8					5.4	5.3				5.4	5.3				6.0	5.7	5.3			30.0
32.0											4.8	4.9				5.1	5.1				5.1	5.2				32.0
34.0											4.0					4.8					4.3	4.4				34.0
36.0																					3.6	3.7				36.0
38.0																					3.0					38.0
40.0																										40.0
44.0																										44.0
48.0																										48.0
52.0																										52.0
56.0																										56.0
60.0																										60.0
64.0																										64.0
68.0																										68.0
72.0																										72.0
1	0	0	0	0		46	46	46	46	46	92	92	92	92	92	46	46	46	46	46	92	92	92	92	92	1
2	0	0	0	0		46	46	46	46	46	46	46	46	46	46	46	46	46	46	46	46	46	46	46	46	2
3	0	0	0	0		46	46	46	46	46	46	46	46	46	46	46	46	46	46	46	46	46	46	46	46	3
4	0	0	0	0		0	0	0	0	0	0	0	0	0	0	46	46	46	46	46	46	46	46	46	46	4
5	0	0	0	0		0	0	0	0	0	0	0	0	0	0	0	0	0	0	0	0	0	0	0	0	5
ID	1	1	1	1		66	66	66	66	66	67	67	67	67	67	54	54	54	54	54	55	55	55	55	55	ID
[DEG]	0~83	0~85	0~85	0~85		22~83	31~85	45~85	61~85	74~85	23~83	31~85	44~85	62~85	77~85	22~83	31~85	43~85	61~85	77~85	23~83	31~85	47~85	59~85	76~85	[DEG]
	1	1	1	1		1	1	1	1	1	1	1	1	1	1	1	1	1	1	1	1	1	1	1	1	
	8.7t	8.7t	8.7t	8.7t		8.7t	8.7t	8.7t	8.7t	8.7t	8.7t	8.7t	8.7t	8.7t	8.7t	8.7t	8.7t	8.7t	8.7t	8.7t	8.7t	8.7t	8.7t	8.7t	8.7t	

FLJ	1.6m + 7.4m	40.9 t	8.0m x 6.2m	360 °	JPN

m	34.4	34.4	34.4	34.4	34.4	38.7	38.7	38.7	38.7	38.7	43.0	43.0	43.0	43.0	43.0	43.0	43.0	43.0	43.0	43.0	47.4	47.4	47.4	47.4	47.4	m
°	5	15	30	45	60	5	15	30	45	60	5	15	30	45	60	5	15	30	45	60	5	15	30	45	60	°
3.0																										3.0
3.5																										3.5
4.0																										4.0
4.5																										4.5
5.0																										5.0
6.0	7.3	7.3																								6.0
7.0	7.3	7.3				7.3	7.3																			7.0
8.0	7.3	7.3	7.3			7.3	7.3				7.3	7.3				7.3	7.3					7.3				8.0
9.0	7.3	7.3	7.3	6.2		7.3	7.3	7.3			7.3	7.3	7.3			7.3	7.3				7.3	7.3				9.0
10.0	7.3	7.3	7.3	6.1	4.5	7.3	7.3	7.3	6.2		7.3	7.3	7.3			7.3	7.3	7.3			7.3	7.3	7.3			10.0
11.0	7.3	7.3	7.3	6.0	4.5	7.3	7.3	7.3	6.1	4.5	7.3	7.3	7.3	6.1	4.5	7.3	7.3	7.3	6.1		7.3	7.3	7.3			11.0
12.0	7.3	7.3	7.3	5.9	4.4	7.3	7.3	7.3	6.0	4.5	7.3	7.3	7.3	6.0	4.5	7.3	7.3	7.3	6.0	4.5	7.3	7.3	7.3	6.1	4.5	12.0
14.0	7.3	7.3	7.2	5.7	4.4	7.3	7.3	7.3	5.8	4.4	7.3	7.3	7.3	5.8	4.4	7.3	7.3	7.3	5.8	4.4	7.3	7.3	7.3	5.9	4.4	14.0
16.0	7.3	7.3	6.8	5.5		7.3	7.3	7.0	5.6		7.3	7.3	7.3	5.7	4.4	7.3	7.3	7.3	5.7	4.4	7.3	7.3	7.3	5.8	4.4	16.0
18.0	7.3	7.3	6.5	5.3		7.3	7.3	6.7	5.4		7.3	7.3	6.9	5.5		7.3	7.3	6.9	5.5		7.3	7.3	7.1	5.6		18.0
20.0	7.3	7.3	6.2	5.2		7.3	7.3	6.4	5.3		7.3	7.3	6.7	5.4		7.3	7.3	6.7	5.4		7.3	7.3	6.9	5.5		20.0
22.0	7.3	7.1	6.0	5.1		7.3	7.3	6.2	5.2		7.3	7.3	6.4	5.3		7.3	7.3	6.4	5.3		7.3	7.3	6.6	5.4		22.0
24.0	7.3	6.7	5.7			7.3	7.1	6.0	5.1		7.3	7.3	6.2	5.2		6.8	6.7	6.2	5.2		7.3	7.3	6.4	5.3		24.0
26.0	7.0	6.3	5.6			7.3	6.7	5.8			7.3	7.2	6.0	5.1		6.2	6.1	6.0	5.1		7.3	7.3	6.2	5.2		26.0
28.0	6.5	6.0	5.4			7.1	6.4	5.6			7.2	6.8	5.8			5.7	5.6	5.6			7.3	7.2	6.0	5.1		28.0
30.0	6.0	5.7	5.3			6.3	6.1	5.4			6.2	6.4	5.6			5.2	5.2	5.2			6.3	6.5	5.8			30.0
32.0	5.7	5.4				5.5	5.6	5.3			5.3	5.5	5.5			4.7	4.7	4.7			5.4	5.6	5.6			32.0
34.0	5.2	5.2				4.7	4.8				4.6	4.7	4.9			4.3	4.3	4.3			4.6	4.8	5.0			34.0
36.0	4.5	4.6				4.0	4.1				3.8	4.0	4.1			3.9	3.9	3.9			3.9	4.1	4.2			36.0
38.0	3.9					3.3	3.4				3.2	3.3				3.5	3.5				3.3	3.4	3.5			38.0
40.0						2.8					2.6	2.7				3.2	3.2				2.7	2.8				40.0
44.0											1.7					2.6					1.7	1.8				44.0
48.0																										48.0
52.0																										52.0
56.0																										56.0
60.0																										60.0
64.0																										64.0
68.0																										68.0
72.0																										72.0
1	46	46	46	46	46	92	92	92	92	92	92	92	92	92	92	0	0	0	0	0	92	92	92	92	92	1
2	46	46	46	46	46	46	46	46	46	46	92	92	92	92	92	46	46	46	46	46	92	92	92	92	92	2
3	46	46	46	46	46	46	46	46	46	46	46	46	46	46	46	92	92	92	92	92	92	92	92	92	92	3
4	46	46	46	46	46	46	46	46	46	46	46	46	46	46	46	92	92	92	92	92	46	46	46	46	46	4
5	46	46	46	46	46	46	46	46	46	46	46	46	46	46	46	92	92	92	92	92	46	46	46	46	46	5
ID	49	49	49	49	49	50	50	50	50	50	42	42	42	42	42	21	21	21	21	21	38	38	38	38	38	ID
[DEG]	23~83	31~85	46~85	59~85	75~85	30~83	31~85	45~85	60~85	75~85	30~83	31~85	44~85	61~85	74~85	17~83	31~85	45~85	61~85	74~85	38~83	39~85	47~85	60~85	74~85	[DEG]
	1	1	1	1	1	1	1	1	1	1	1	1	1	1	1	1	1	1	1	1	1	1	1	1	1	
	8.7t	8.7t	8.7t	8.7t	8.7t	8.7t	8.7t	8.7t	8.7t	8.7t	8.7t	8.7t	8.7t	8.7t	8.7t	8.7t	8.7t	8.7t	8.7t	8.7t	8.7t	8.7t	8.7t	8.7t	8.7t	

m	47.4	47.4	47.4	47.4	47.4	51.7	51.7	51.7	51.7	51.7	51.7	51.7	51.7	51.7	51.7	56.0	56.0	56.0	56.0	56.0	60.0	60.0	60.0	60.0	60.0	m
°	5	15	30	45	60	5	15	30	45	60	5	15	30	45	60	5	15	30	45	60	5	15	30	45	60	°
3.0																										3.0
3.5																										3.5
4.0																										4.0
4.5																										4.5
5.0																										5.0
6.0																										6.0
7.0																										7.0
8.0		7.3																								8.0
9.0	7.3	7.3					7.3					6.4														9.0
10.0	7.3	7.3	7.3			7.3	7.3				6.4	6.4					6.3									10.0
11.0	7.3	7.3	7.3			7.3	7.3	7.3			6.4	6.4	6.4			6.3	6.3					5.3				11.0
12.0	7.3	7.3	7.3	6.1	4.5	7.3	7.3	7.3			6.4	6.4	6.4			6.3	6.3	6.3			5.3	5.3				12.0
14.0	7.3	7.3	7.3	5.9	4.4	7.3	7.3	7.3	6.0	4.5	6.4	6.4	6.4	6.0	4.5	6.3	6.3	6.3	6.0	4.5	5.3	5.3	5.3			14.0
16.0	7.3	7.3	7.3	5.8	4.4	7.3	7.3	7.3	5.8	4.4	6.4	6.4	6.4	5.8	4.4	6.3	6.3	6.3	5.9	4.4	5.3	5.3	5.3	5.3	4.4	16.0
18.0	7.3	7.3	7.1	5.6		7.3	7.3	7.3	5.7	4.3	6.4	6.4	6.4	5.7	4.3	6.3	6.3	6.3	5.7	4.4	5.3	5.3	5.3	5.3	4.4	18.0
20.0	7.3	7.3	6.9	5.5		7.3	7.3	7.0	5.5		6.4	6.4	6.4	5.5		6.3	6.3	6.3	5.6		5.3	5.3	5.3	5.3	4.3	20.0
22.0	7.3	7.3	6.6	5.4		7.3	7.3	6.8	5.4		6.4	6.4	6.4	5.4		6.3	6.3	6.3	5.5		5.3	5.3	5.3	5.3		22.0
24.0	7.3	7.3	6.4	5.3		7.3	7.3	6.5	5.3		6.4	6.4	6.4	5.3		6.3	6.3	6.3	5.4		5.3	5.3	5.3	5.3		24.0
26.0	7.3	7.3	6.2	5.2		7.3	7.3	6.3	5.2		6.4	6.4	6.3	5.2		6.3	6.3	6.3	5.3		5.3	5.3	5.1	5.0		26.0
28.0	7.0	6.8	6.0	5.1		7.3	7.2	6.1	5.2		6.4	6.2	6.1	5.2		6.3	6.3	6.1	5.2		5.1	4.9	4.8	4.7		28.0
30.0	6.5	6.4	5.8			6.4	6.6	6.0	5.1		5.9	5.8	5.7	5.1		6.1	6.0	5.8	5.1		4.7	4.5	4.4	4.4		30.0
32.0	5.9	6.0	5.6			5.5	5.7	5.8			5.5	5.5	5.4			5.8	5.7	5.6	5.1		4.3	4.2	4.1	4.1		32.0
34.0	5.1	5.3	5.5			4.8	4.9	5.1			5.2	5.1	5.0			5.0	5.1	5.3			4.0	3.9	3.8	3.8		34.0
36.0	4.5	4.6	4.7			4.1	4.2	4.4			4.7	4.8	4.7			4.3	4.5	4.6			3.7	3.7	3.6			36.0
38.0	3.8	4.0	4.1			3.4	3.6	3.7			4.1	4.2	4.3			3.7	3.8	4.0			3.5	3.4	3.4			38.0
40.0	3.3	3.4				2.8	3.0	3.1			3.5	3.6	3.7			3.1	3.2	3.4			3.1	3.2	3.1			40.0
44.0	2.3	2.4				1.9	2.0				2.5	2.6				2.1	2.2	2.3			2.1	2.2	2.3			44.0
48.0	1.5										1.7	1.8				1.3	1.4				1.3	1.4	1.5			48.0
52.0																										52.0
56.0																										56.0
60.0																										60.0
64.0																										64.0
68.0																										68.0
72.0																										72.0
1	46	46	46	46	46	92	92	92	92	92	46	46	46	46	46	92	92	92	92	92	100	100	100	100	100	1
2	92	92	92	92	92	92	92	92	92	92	92	92	92	92	92	92	92	92	92	92	100	100	100	100	100	2
3	92	92	92	92	92	92	92	92	92	92	92	92	92	92	92	92	92	92	92	92	100	100	100	100	100	3
4	92	92	92	92	92	92	92	92	92	92	92	92	92	92	92	92	92	92	92	92	100	100	100	100	100	4
5	46	46	46	46	46	46	46	46	46	46	92	92	92	92	92	92	92	92	92	92	100	100	100	100	100	5
ID	31	31	31	31	31	32	32	32	32	32	23	23	23	23	23	24	24	24	24	24	16	16	16	16	16	ID
[DEG]	30~83	31~85	47~85	59~85	74~85	45~83	45~85	46~85	61~85	74~85	38~83	39~85	46~85	61~85	74~85	44~83	45~85	46~85	60~85	74~85	48~83	49~85	50~85	60~85	74~85	[DEG]
	1	1	1	1	1	1	1	1	1	1	1	1	1	1	1	1	1	1	1	1	1	1	1	1	1	
	8.7t	8.7t	8.7t	8.7t	8.7t	8.7t	8.7t	8.7t	8.7t	8.7t	8.7t	8.7t	8.7t	8.7t	8.7t	8.7t	8.7t	8.7t	8.7t	8.7t	8.7t	8.7t	8.7t	8.7t	8.7t	

フルオートラフィングジブ

FLJ	1.6m + 12.4m	40.9 t	8.0m x 6.2m	360 °	JPN

m	12.8	12.8	12.8	12.8	12.8	25.8	25.8	25.8	25.8	25.8	30.1	30.1	30.1	30.1	30.1	30.1	30.1	30.1	30.1	30.1	34.4	34.4	34.4	34.4	34.4	m
°	5	15	30	45	60	5	15	30	45	60	5	15	30	45	60	5	15	30	45	60	5	15	30	45	60	°
3.0																										3.0
3.5	4.3																									3.5
4.0	4.3																									4.0
4.5	4.3																									4.5
5.0	4.3																									5.0
6.0	4.3	4.3				4.3																				6.0
7.0	4.3	4.3				4.3	4.3				4.3					4.3										7.0
8.0	4.3	4.3				4.3	4.3				4.3	4.3				4.3	4.3				4.3	4.3				8.0
9.0	4.3	4.3	4.3			4.3	4.3				4.3	4.3				4.3	4.3				4.3	4.3				9.0
10.0	4.3	4.3	4.1			4.3	4.3	4.3			4.3	4.3				4.3	4.3				4.3	4.3				10.0
11.0	4.3	4.3	3.9	3.2		4.3	4.3	4.3			4.3	4.3	4.3			4.3	4.3	4.3			4.3	4.3	4.3			11.0
12.0	4.3	4.3	3.7	3.1		4.3	4.3	4.3	3.3		4.3	4.3	4.3			4.3	4.3	4.3			4.3	4.3	4.3			12.0
14.0	4.1	3.8	3.4	2.9		4.3	4.3	4.0	3.2	2.4	4.3	4.3	4.2	3.2	2.4	4.3	4.3	4.2	3.2	2.4	4.3	4.3	4.3	3.3		14.0
16.0	3.6	3.4	3.1	2.7		4.3	4.3	3.7	3.0	2.4	4.3	4.3	3.9	3.1	2.4	4.3	4.3	3.9	3.1	2.4	4.3	4.3	4.0	3.1	2.4	16.0
18.0	3.2	3.1	2.9			4.3	4.2	3.5	2.9		4.3	4.3	3.7	3.0		4.3	4.3	3.7	3.0		4.3	4.3	3.8	3.0	2.3	18.0
20.0	2.9	2.9				4.3	3.9	3.3	2.8		4.3	4.2	3.5	2.9		4.3	4.2	3.5	2.9		4.3	4.3	3.6	2.9		20.0
22.0	2.6	2.7				4.0	3.6	3.1	2.7		4.3	3.9	3.3	2.8		4.3	3.9	3.3	2.8		4.3	4.2	3.4	2.8		22.0
24.0						3.7	3.4	3.0			4.1	3.7	3.1	2.7		4.1	3.7	3.1	2.7		4.3	3.9	3.3	2.8		24.0
26.0						3.4	3.2	2.9			3.8	3.4	3.0			3.8	3.4	3.0			4.1	3.7	3.1	2.7		26.0
28.0						3.1	3.0	2.8			3.5	3.3	2.9			3.5	3.3	2.9			3.8	3.5	3.0			28.0
30.0						2.9	2.8				3.2	3.1	2.8			3.2	3.1	2.8			3.6	3.3	2.9			30.0
32.0						2.7	2.7				3.0	2.9	2.7			3.0	2.9	2.7			3.3	3.1	2.8			32.0
34.0						2.5					2.8	2.8				2.8	2.8				3.1	3.0	2.7			34.0
36.0											2.7	2.7				2.7	2.7				3.0	2.9				36.0
38.0											2.5					2.5					2.8	2.8				38.0
40.0																					2.7	2.7				40.0
44.0																										44.0
48.0																										48.0
52.0																										52.0
56.0																										56.0
60.0																										60.0
64.0																										64.0
68.0																										68.0
72.0																										72.0
1	0	0	0	0		46	46	46	46	46	92	92	92	92	92	46	46	46	46	46	92	92	92	92	92	1
2	0	0	0	0		46	46	46	46	46	46	46	46	46	46	46	46	46	46	46	46	46	46	46	46	2
3	0	0	0	0		46	46	46	46	46	46	46	46	46	46	46	46	46	46	46	46	46	46	46	46	3
4	0	0	0	0		0	0	0	0	0	0	0	0	0	0	46	46	46	46	46	46	46	46	46	46	4
5	0	0	0	0		0	0	0	0	0	0	0	0	0	0	0	0	0	0	0	0	0	0	0	0	5
ID	1	1	1	1		66	66	66	66	66	67	67	67	67	67	54	54	54	54	54	55	55	55	55	55	ID
[DEG]	0~83	0~85	0~85	0~85		25~83	27~85	47~85	58~85	76~85	18~83	28~85	46~85	59~85	75~85	17~83	27~85	45~85	59~85	75~85	19~83	33~85	44~85	60~85	74~85	[DEG]
	1	1	1	1		1	1	1	1	1	1	1	1	1	1	1	1	1	1	1	1	1	1	1	1	
	8.7t	8.7t	8.7t	8.7t		8.7t	8.7t	8.7t	8.7t	8.7t	8.7t	8.7t	8.7t	8.7t	8.7t	8.7t	8.7t	8.7t	8.7t	8.7t	8.7t	8.7t	8.7t	8.7t	8.7t	

m	34.4	34.4	34.4	34.4	34.4	38.7	38.7	38.7	38.7	38.7	43.0	43.0	43.0	43.0	43.0	43.0	43.0	43.0	43.0	43.0	47.4	47.4	47.4	47.4	47.4	m
°	5	15	30	45	60	5	15	30	45	60	5	15	30	45	60	5	15	30	45	60	5	15	30	45	60	°
3.0																										3.0
3.5																										3.5
4.0																										4.0
4.5																										4.5
5.0																										5.0
6.0																										6.0
7.0	4.3																									7.0
8.0	4.3	4.3				4.3																				8.0
9.0	4.3	4.3				4.3	4.3				4.3					4.3										9.0
10.0	4.3	4.3				4.3	4.3				4.3	4.3				4.3	4.3				4.3					10.0
11.0	4.3	4.3	4.3			4.3	4.3				4.3	4.3				4.3	4.3				4.3	4.3				11.0
12.0	4.3	4.3	4.3			4.3	4.3	4.3			4.3	4.3				4.3	4.3				4.3	4.3				12.0
14.0	4.3	4.3	4.2	3.3		4.3	4.3	4.2	3.3		4.3	4.3	4.2			4.3	4.3	4.1			4.3	4.3	4.2			14.0
16.0	4.3	4.3	4.0	3.1	2.4	4.3	4.3	4.0	3.2	2.4	4.3	4.3	4.0	3.2	2.4	4.3	4.3	3.9	3.2		4.3	4.3	4.0	3.3		16.0
18.0	4.3	4.3	3.8	3.0	2.3	4.3	4.3	3.9	3.1	2.3	4.3	4.3	3.9	3.1	2.4	4.3	4.3	3.7	3.1	2.4	4.3	4.3	3.8	3.2	2.4	18.0
20.0	4.3	4.3	3.6	2.9		4.3	4.3	3.7	3.0	2.3	4.3	4.3	3.7	3.0	2.3	4.3	4.3	3.6	3.0	2.3	4.3	4.3	3.7	3.1	2.3	20.0
22.0	4.3	4.2	3.4	2.8		4.3	4.3	3.6	2.9		4.3	4.3	3.6	2.9		4.3	4.2	3.5	2.9		4.3	4.3	3.6	3.0	2.3	22.0
24.0	4.3	3.9	3.3	2.8		4.3	4.1	3.4	2.8		4.3	4.2	3.5	2.9		4.3	4.0	3.4	2.9		4.3	4.2	3.4	2.9		24.0
26.0	4.1	3.7	3.1	2.7		4.3	3.9	3.3	2.7		4.3	4.0	3.4	2.8		4.3	3.8	3.3	2.8		4.3	4.0	3.4	2.8		26.0
28.0	3.8	3.5	3.0			4.2	3.7	3.1	2.7		4.3	3.8	3.3	2.7		4.2	3.7	3.2	2.7		4.3	3.8	3.3	2.8		28.0
30.0	3.6	3.3	2.9			3.9	3.5	3.0			4.2	3.7	3.1	2.7		4.0	3.5	3.1	2.7		4.3	3.7	3.2	2.7		30.0
32.0	3.3	3.1	2.8			3.7	3.4	2.9			4.0	3.5	3.0			3.9	3.4	3.0			4.1	3.5	3.1	2.7		32.0
34.0	3.1	3.0	2.7			3.4	3.2	2.8			3.7	3.4	2.9			3.7	3.3	2.9			3.9	3.4	3.0	2.6		34.0
36.0	3.0	2.9				3.2	3.1	2.8			3.5	3.2	2.9			3.5	3.2	2.8			3.8	3.3	2.9			36.0
38.0	2.8	2.8				3.1	2.9	2.7			3.3	3.1	2.8			3.3	3.1	2.8			3.6	3.2	2.9			38.0
40.0	2.7	2.7				2.9	2.8				3.2	3.0	2.7			3.2	3.0	2.7			3.3	3.1	2.8			40.0
44.0						2.5	2.6				2.4	2.5				2.7	2.8				2.4	2.5	2.7			44.0
48.0											1.5	1.6				2.2	2.3				1.5	1.7				48.0
52.0																										52.0
56.0																										56.0
60.0																										60.0
64.0																										64.0
68.0																										68.0
72.0																										72.0
1	46	46	46	46	46	92	92	92	92	92	92	92	92	92	92	0	0	0	0	0	92	92	92	92	92	1
2	46	46	46	46	46	46	46	46	46	46	92	92	92	92	92	46	46	46	46	46	92	92	92	92	92	2
3	46	46	46	46	46	46	46	46	46	46	46	46	46	46	46	92	92	92	92	92	92	92	92	92	92	3
4	46	46	46	46	46	46	46	46	46	46	46	46	46	46	46	92	92	92	92	92	46	46	46	46	46	4
5	46	46	46	46	46	46	46	46	46	46	46	46	46	46	46	92	92	92	92	92	46	46	46	46	46	5
ID	49	49	49	49	49	50	50	50	50	50	42	42	42	42	42	21	21	21	21	21	38	38	38	38	38	ID
[DEG]	18~83	33~85	44~85	60~85	74~85	20~83	33~85	43~85	58~85	76~85	32~83	33~85	43~85	59~85	75~85	22~83	34~85	43~85	59~85	75~85	39~83	41~85	49~85	60~85	75~85	[DEG]
	1	1	1	1	1	1	1	1	1	1	1	1	1	1	1	1	1	1	1	1	1	1	1	1	1	
	8.7t	8.7t	8.7t	8.7t	8.7t	8.7t	8.7t	8.7t	8.7t	8.7t	8.7t	8.7t	8.7t	8.7t	8.7t	8.7t	8.7t	8.7t	8.7t	8.7t	8.7t	8.7t	8.7t	8.7t	8.7t	

FLJ	1.6m + 12.4m	40.9 t	8.0m x 6.2m	360 °	JPN

m	47.4	47.4	47.4	47.4	47.4	51.7	51.7	51.7	51.7	51.7	51.7	51.7	51.7	51.7	51.7	56.0	56.0	56.0	56.0	56.0	60.0	60.0	60.0	60.0	60.0	m
°	5	15	30	45	60	5	15	30	45	60	5	15	30	45	60	5	15	30	45	60	5	15	30	45	60	°
m																										
3.0																										3.0
3.5																										3.5
4.0																										4.0
4.5																										4.5
5.0																										5.0
6.0																										6.0
7.0																										7.0
8.0																										8.0
9.0																										9.0
10.0	4.3																									10.0
11.0	4.3	4.3				4.3					4.3															11.0
12.0	4.3	4.3				4.3	4.3				4.3	4.3				4.3										12.0
14.0	4.3	4.3	4.1			4.3	4.3				4.3	4.3				4.3	4.3				3.3	3.3				14.0
16.0	4.3	4.3	4.0	3.3		4.3	4.3	3.9			4.3	4.3	3.9			4.3	4.3	3.8			3.3	3.3				16.0
18.0	4.3	4.3	3.8	3.2	2.4	4.3	4.3	3.8	3.2	2.4	4.3	4.3	3.7	3.2	2.4	4.3	4.3	3.7	3.2		3.3	3.3	3.3			18.0
20.0	4.3	4.3	3.7	3.1	2.3	4.3	4.3	3.7	3.1	2.3	4.3	4.3	3.6	3.1	2.3	4.3	4.3	3.6	3.1	2.3	3.3	3.3	3.3	3.1	2.3	20.0
22.0	4.3	4.3	3.5	3.0	2.3	4.3	4.3	3.5	3.0	2.3	4.3	4.2	3.5	3.0	2.3	4.3	4.2	3.5	3.1	2.3	3.3	3.3	3.3	3.0	2.3	22.0
24.0	4.3	4.1	3.4	2.9		4.3	4.1	3.4	2.9		4.3	4.0	3.4	2.9		4.3	4.0	3.4	3.0	2.3	3.3	3.3	3.3	3.0	2.3	24.0
26.0	4.3	3.9	3.3	2.8		4.3	3.9	3.3	2.9		4.3	3.9	3.2	2.9		4.3	3.9	3.2	2.9		3.3	3.3	3.2	2.9		26.0
28.0	4.3	3.8	3.2	2.8		4.3	3.8	3.2	2.8		4.3	3.7	3.2	2.8		4.3	3.7	3.2	2.9		3.3	3.3	3.1	2.8		28.0
30.0	4.2	3.6	3.1	2.7		4.2	3.7	3.1	2.8		4.1	3.6	3.1	2.8		4.1	3.6	3.1	2.8		3.3	3.3	3.0	2.8		30.0
32.0	4.0	3.5	3.0	2.7		4.1	3.5	3.1	2.7		4.0	3.5	3.0	2.7		4.0	3.5	3.0	2.7		3.3	3.3	3.0	2.7		32.0
34.0	3.9	3.4	3.0	2.6		3.9	3.4	3.0	2.7		3.8	3.3	2.9	2.7		3.9	3.4	2.9	2.7		3.3	3.3	2.9	2.7		34.0
36.0	3.7	3.3	2.9			3.8	3.3	2.9	2.6		3.7	3.2	2.9	2.6		3.7	3.3	2.9	2.7		3.3	3.2	2.8	2.6		36.0
38.0	3.6	3.2	2.8			3.6	3.2	2.8			3.6	3.1	2.8			3.6	3.2	2.8	2.6		3.1	3.1	2.8	2.6		38.0
40.0	3.4	3.1	2.8			3.5	3.1	2.8			3.4	3.1	2.7			3.5	3.1	2.7			2.9	2.9	2.7	2.6		40.0
44.0	2.9	2.9	2.7			2.5	2.7	2.7			3.1	2.9	2.6			2.7	2.8	2.6			2.6	2.5	2.5			44.0
48.0	2.1	2.2				1.7	1.8				2.2	2.4				1.8	2.0	2.2			1.8	2.0	2.2			48.0
52.0	1.4	1.5									1.6	1.7				1.2	1.3					1.2	1.4			52.0
56.0																										56.0
60.0																										60.0
64.0																										64.0
68.0																										68.0
72.0																										72.0
%																										
1	46	46	46	46	46	92	92	92	92	92	46	46	46	46	46	92	92	92	92	92	100	100	100	100	100	1
2	92	92	92	92	92	92	92	92	92	92	92	92	92	92	92	92	92	92	92	92	100	100	100	100	100	2
3	92	92	92	92	92	92	92	92	92	92	92	92	92	92	92	92	92	92	92	92	100	100	100	100	100	3
4	92	92	92	92	92	92	92	92	92	92	92	92	92	92	92	92	92	92	92	92	100	100	100	100	100	4
5	46	46	46	46	46	46	46	46	46	46	92	92	92	92	92	92	92	92	92	92	100	100	100	100	100	5
ID	31	31	31	31	31	32	32	32	32	32	23	23	23	23	23	24	24	24	24	24	16	16	16	16	16	ID
[DEG]	32~83	33~85	49~85	60~85	75~85	45~83	46~85	48~85	59~85	74~85	39~83	40~85	48~85	59~85	74~85	44~83	46~85	47~85	58~85	74~85	53~83	50~85	51~85	61~85	74~85	[DEG]
	1	1	1	1	1	1	1	1	1	1	1	1	1	1	1	1	1	1	1	1	1	1	1	1	1	
	8.7t	8.7t	8.7t	8.7t	8.7t	8.7t	8.7t	8.7t	8.7t	8.7t	8.7t	8.7t	8.7t	8.7t	8.7t	8.7t	8.7t	8.7t	8.7t	8.7t	8.7t	8.7t	8.7t	8.7t	8.7t	

FLJ	1.6m + 17.4m	40.9 t	8.0m x 6.2m	360 °	JPN

m	12.8	12.8	12.8	12.8	12.8	25.8	25.8	25.8	25.8	25.8	30.1	30.1	30.1	30.1	30.1	30.1	30.1	30.1	30.1	30.1	34.4	34.4	34.4	34.4	34.4	m
°	5	15	30	45	60	5	15	30	45	60	5	15	30	45	60	5	15	30	45	60	5	15	30	45	60	°
m																										
3.0																										3.0
3.5																										3.5
4.0																										4.0
4.5																										4.5
5.0	3.3																									5.0
6.0	3.3																									6.0
7.0	3.3																									7.0
8.0	3.3	3.3				3.3					3.3					3.3										8.0
9.0	3.3	3.3				3.3	3.3				3.3					3.3					3.3					9.0
10.0	3.3	3.3				3.3	3.3				3.3	3.3				3.3	3.3				3.3					10.0
11.0	3.3	3.3				3.3	3.3				3.3	3.3				3.3	3.3				3.3	3.3				11.0
12.0	3.3	3.2	2.6			3.3	3.3				3.3	3.3				3.3	3.3				3.3	3.3				12.0
14.0	3.3	2.9	2.4			3.3	3.2	2.6			3.3	3.3	2.7			3.3	3.2	2.6			3.3	3.3				14.0
16.0	2.9	2.6	2.2	1.8		3.3	3.0	2.5			3.3	3.1	2.5			3.3	3.0	2.5			3.3	3.1	2.5			16.0
18.0	2.5	2.3	2.0	1.7		3.3	2.8	2.3	1.9		3.3	2.9	2.4	1.9		3.3	2.9	2.4	1.9		3.3	2.9	2.4	1.9		18.0
20.0	2.3	2.1	1.8	1.6		3.1	2.6	2.2	1.8		3.2	2.7	2.2	1.8	1.5	3.2	2.7	2.2	1.8	1.5	3.3	2.8	2.3	1.8	1.5	20.0
22.0	2.0	1.9	1.7			2.9	2.5	2.0	1.7		3.0	2.6	2.1	1.7	1.5	3.0	2.6	2.1	1.7	1.5	3.1	2.6	2.2	1.8	1.5	22.0
24.0	1.8	1.8	1.6			2.7	2.4	1.9	1.6		2.8	2.5	2.0	1.7		2.8	2.4	2.0	1.7		2.9	2.5	2.1	1.7		24.0
26.0	1.7	1.6				2.5	2.2	1.8	1.6		2.7	2.3	1.9	1.6		2.6	2.3	1.9	1.6		2.7	2.4	2.0	1.6		26.0
28.0	1.5					2.3	2.1	1.7	1.5		2.5	2.2	1.8	1.6		2.5	2.2	1.8	1.6		2.6	2.3	1.9	1.6		28.0
30.0						2.1	1.9	1.7			2.4	2.1	1.7	1.5		2.4	2.1	1.7	1.5		2.5	2.2	1.8	1.5		30.0
32.0						2.0	1.8	1.6			2.2	2.0	1.7			2.2	2.0	1.7			2.4	2.1	1.7	1.5		32.0
34.0						1.8	1.7				2.0	1.9	1.6			2.0	1.9	1.6			2.3	2.0	1.7			34.0
36.0						1.7	1.7				1.9	1.8	1.6			1.9	1.8	1.6			2.1	1.9	1.6			36.0
38.0						1.6	1.6				1.8	1.7				1.8	1.7				2.0	1.8	1.6			38.0
40.0						1.5					1.7	1.6				1.7	1.6				1.9	1.7				40.0
44.0											1.5					1.5					1.7	1.6				44.0
48.0																					1.5					48.0
52.0																										52.0
56.0																										56.0
60.0																										60.0
64.0																										64.0
68.0																										68.0
72.0																										72.0
%																										
1	0	0	0	0		46	46	46	46		92	92	92	92	92	46	46	46	46	46	92	92	92	92	92	1
2	0	0	0	0		46	46	46	46		46	46	46	46	46	46	46	46	46	46	46	46	46	46	46	2
3	0	0	0	0		46	46	46	46		46	46	46	46	46	46	46	46	46	46	46	46	46	46	46	3
4	0	0	0	0		0	0	0	0		0	0	0	0	0	46	46	46	46	46	46	46	46	46	46	4
5	0	0	0	0		0	0	0	0		0	0	0	0	0	0	0	0	0	0	0	0	0	0	0	5
ID	1	1	1	1		66	66	66	66		67	67	67	67	67	54	54	54	54	54	55	55	55	55	55	ID
[DEG]	0~83	0~85	0~85	0~85		20~83	30~85	44~85	60~85		21~83	35~85	43~85	57~85	73~85	21~83	35~85	43~85	57~85	73~85	22~83	35~85	46~85	58~85	75~85	[DEG]
	1	1	1	1		1	1	1	1		1	1	1	1	1	1	1	1	1	1	1	1	1	1	1	
	8.7t	8.7t	8.7t	8.7t		8.7t	8.7t	8.7t	8.7t		8.7t	8.7t	8.7t	8.7t	8.7t	8.7t	8.7t	8.7t	8.7t	8.7t	8.7t	8.7t	8.7t	8.7t	8.7t	

フルオートラフィングジブ

FLJ	1.6m + 17.4m	40.9 t	8.0m x 6.2m	360 °	JPN

m	34.4	34.4	34.4	34.4	34.4	38.7	38.7	38.7	38.7	38.7	43.0	43.0	43.0	43.0	43.0	43.0	43.0	43.0	43.0	43.0	47.4	47.4	47.4	47.4	47.4	m
°	5	15	30	45	60	5	15	30	45	60	5	15	30	45	60	5	15	30	45	60	5	15	30	45	60	°
3.0																										3.0
3.5																										3.5
4.0																										4.0
4.5																										4.5
5.0																										5.0
6.0																										6.0
7.0																										7.0
8.0																										8.0
9.0	3.3																									9.0
10.0	3.3					3.3																				10.0
11.0	3.3	3.3				3.3					3.3					2.9										11.0
12.0	3.3	3.3				3.3	3.3				3.3	3.3				2.9					3.2					12.0
14.0	3.3	3.2				3.3	3.3				3.3	3.2				2.9	2.9				3.2	3.2				14.0
16.0	3.3	3.0	2.5			3.3	3.1	2.5			3.3	3.1				2.9	2.9				3.2	3.1				16.0
18.0	3.3	2.9	2.4	1.9		3.3	2.9	2.4			3.3	2.9	2.4			2.9	2.8	2.3			3.2	2.9	2.4			18.0
20.0	3.2	2.7	2.3	1.8	1.5	3.3	2.8	2.3	1.9		3.3	2.8	2.3	1.9		2.9	2.7	2.2	1.9		3.2	2.8	2.3			20.0
22.0	3.0	2.6	2.2	1.8	1.5	3.1	2.6	2.2	1.8	1.5	3.1	2.7	2.2	1.8	1.5	2.9	2.6	2.2	1.8	1.5	3.1	2.7	2.2	1.8		22.0
24.0	2.9	2.5	2.1	1.7		2.9	2.5	2.1	1.7	1.5	3.0	2.5	2.1	1.8	1.5	2.9	2.5	2.1	1.8	1.5	3.0	2.5	2.1	1.8	1.5	24.0
26.0	2.7	2.4	2.0	1.6		2.8	2.4	2.1	1.7		2.8	2.4	2.1	1.7		2.7	2.4	2.0	1.7		2.9	2.4	2.1	1.7	1.4	26.0
28.0	2.6	2.3	1.9	1.6		2.7	2.3	2.0	1.6		2.7	2.3	2.0	1.6		2.6	2.3	2.0	1.6		2.7	2.4	2.0	1.7		28.0
30.0	2.5	2.2	1.8	1.5		2.5	2.2	1.9	1.6		2.6	2.3	1.9	1.6		2.5	2.2	1.9	1.6		2.6	2.3	1.9	1.6		30.0
32.0	2.4	2.1	1.7	1.5		2.4	2.1	1.8	1.5		2.5	2.2	1.9	1.6		2.4	2.1	1.8	1.6		2.5	2.2	1.9	1.6		32.0
34.0	2.3	2.0	1.7			2.3	2.1	1.7	1.5		2.4	2.1	1.8	1.5		2.3	2.0	1.8	1.5		2.4	2.1	1.8	1.6		34.0
36.0	2.1	1.9	1.6			2.2	2.0	1.7			2.3	2.0	1.7	1.5		2.2	2.0	1.7	1.5		2.3	2.0	1.8	1.5		36.0
38.0	2.0	1.8	1.6			2.2	1.9	1.6			2.2	2.0	1.7			2.2	1.9	1.7			2.2	2.0	1.7	1.5		38.0
40.0	1.9	1.7				2.0	1.9	1.6			2.1	1.9	1.6			2.1	1.9	1.6			2.2	1.9	1.7			40.0
44.0	1.7	1.6				1.8	1.7				2.0	1.8	1.6			2.0	1.8	1.6			2.0	1.8	1.6			44.0
48.0	1.5					1.7	1.6				1.8	1.7				1.8	1.7				1.9	1.7	1.5			48.0
52.0						1.5					1.4	1.6				1.7	1.6				1.4	1.6				52.0
56.0																1.5										56.0
60.0																										60.0
64.0																										64.0
68.0																										68.0
72.0																										72.0
1	46	46	46	46	46	92	92	92	92	92	92	92	92	92	92	0	0	0	0	0	92	92	92	92	92	1
2	46	46	46	46	46	46	46	46	46	46	92	92	92	92	92	46	46	46	46	46	92	92	92	92	92	2
3	46	46	46	46	46	46	46	46	46	46	46	46	46	46	46	92	92	92	92	92	92	92	92	92	92	3
4	46	46	46	46	46	46	46	46	46	46	46	46	46	46	46	92	92	92	92	92	46	46	46	46	46	4
5	46	46	46	46	46	46	46	46	46	46	46	46	46	46	46	92	92	92	92	92	46	46	46	46	46	5
ID	49	49	49	49	49	50	50	50	50	50	42	42	42	42	42	21	21	21	21	21	38	38	38	38	38	ID
[DEG]	22~83	35~85	46~85	58~85	75~85	23~83	35~85	44~85	59~85	74~85	33~83	35~85	44~85	57~85	74~85	24~83	26~85	44~85	58~85	74~85	40~83	42~85	44~85	61~85	73~85	[DEG]
	1	1	1	1	1	1	1	1	1	1	1	1	1	1	1	1	1	1	1	1	1	1	1	1	1	
	8.7t	8.7t	8.7t	8.7t	8.7t	8.7t	8.7t	8.7t	8.7t	8.7t	8.7t	8.7t	8.7t	8.7t	8.7t	8.7t	8.7t	8.7t	8.7t	8.7t	8.7t	8.7t	8.7t	8.7t	8.7t	

m	47.4	47.4	47.4	47.4	47.4	51.7	51.7	51.7	51.7	51.7	51.7	51.7	51.7	51.7	51.7	56.0	56.0	56.0	56.0	56.0	60.0	60.0	60.0	60.0	60.0	m
°	5	15	30	45	60	5	15	30	45	60	5	15	30	45	60	5	15	30	45	60	5	15	30	45	60	°
3.0																										3.0
3.5																										3.5
4.0																										4.0
4.5																										4.5
5.0																										5.0
6.0																										6.0
7.0																										7.0
8.0																										8.0
9.0																										9.0
10.0																										10.0
11.0																										11.0
12.0	3.1																									12.0
14.0	3.1	3.1				3.2	3.1				3.2	3.0				2.9										14.0
16.0	3.1	3.0				3.2	3.0				3.1	2.9				2.9	2.9				2.8	2.7				16.0
18.0	3.1	2.9	2.4			3.2	2.9				3.1	2.8				2.9	2.8				2.8	2.6				18.0
20.0	3.1	2.7	2.3			3.1	2.7	2.3			3.0	2.7	2.2			2.9	2.7	2.2			2.8	2.6				20.0
22.0	3.1	2.6	2.2	1.8		3.1	2.6	2.2	1.8		2.9	2.6	2.2	1.8		2.9	2.6	2.2			2.7	2.5	2.1			22.0
24.0	2.9	2.5	2.1	1.8	1.5	2.9	2.5	2.1	1.8	1.5	2.9	2.5	2.1	1.8	1.5	2.8	2.5	2.1	1.8		2.7	2.5	2.1	1.8		24.0
26.0	2.8	2.4	2.0	1.7	1.4	2.8	2.4	2.1	1.7	1.4	2.8	2.4	2.0	1.7	1.4	2.8	2.4	2.0	1.8	1.4	2.6	2.4	2.0	1.8	1.4	26.0
28.0	2.7	2.3	2.0	1.7		2.7	2.3	2.0	1.7	1.4	2.7	2.3	2.0	1.7	1.4	2.7	2.3	2.0	1.7	1.4	2.6	2.3	2.0	1.7	1.4	28.0
30.0	2.6	2.2	1.9	1.6		2.6	2.3	1.9	1.6		2.6	2.2	1.9	1.6		2.6	2.2	1.9	1.7		2.5	2.2	1.9	1.7	1.4	30.0
32.0	2.5	2.2	1.9	1.6		2.5	2.2	1.9	1.6		2.5	2.2	1.9	1.6		2.5	2.2	1.9	1.6		2.5	2.2	1.8	1.6		32.0
34.0	2.4	2.1	1.8	1.6		2.4	2.1	1.8	1.6		2.4	2.1	1.8	1.6		2.4	2.1	1.8	1.6		2.4	2.1	1.8	1.6		34.0
36.0	2.3	2.0	1.8	1.5		2.3	2.0	1.8	1.5		2.3	2.0	1.7	1.5		2.3	2.0	1.8	1.6		2.3	2.0	1.7	1.6		36.0
38.0	2.2	2.0	1.7	1.5		2.3	2.0	1.7	1.5		2.2	2.0	1.7	1.5		2.2	2.0	1.7	1.5		2.2	2.0	1.7	1.5		38.0
40.0	2.1	1.9	1.7			2.2	1.9	1.7	1.5		2.1	1.9	1.7	1.5		2.2	1.9	1.7	1.5		2.2	1.9	1.7	1.5		40.0
44.0	2.0	1.8	1.6			2.1	1.8	1.6			2.0	1.8	1.6			2.0	1.8	1.6			2.0	1.8	1.6	1.5		44.0
48.0	1.9	1.7	1.5			1.9	1.7	1.6			1.9	1.7	1.5			1.9	1.7	1.5			1.9	1.7	1.5			48.0
52.0	1.8	1.7				1.5	1.7	1.5			1.8	1.6	1.5			1.6	1.6	1.5			1.5	1.6	1.5			52.0
56.0	1.3	1.4									1.4	1.6					1.2					1.1	1.4			56.0
60.0																										60.0
64.0																										64.0
68.0																										68.0
72.0																										72.0
1	46	46	46	46	46	92	92	92	92	92	46	46	46	46	46	92	92	92	92	92	100	100	100	100	100	1
2	92	92	92	92	92	92	92	92	92	92	92	92	92	92	92	92	92	92	92	92	100	100	100	100	100	2
3	92	92	92	92	92	92	92	92	92	92	92	92	92	92	92	92	92	92	92	92	100	100	100	100	100	3
4	92	92	92	92	92	92	92	92	92	92	92	92	92	92	92	92	92	92	92	92	100	100	100	100	100	4
5	46	46	46	46	46	46	46	46	46	46	92	92	92	92	92	92	92	92	92	92	100	100	100	100	100	5
ID	31	31	31	31	31	32	32	32	32	32	23	23	23	23	23	24	24	24	24	24	16	16	16	16	16	ID
[DEG]	33~83	35~85	43~85	61~85	73~85	45~83	47~85	43~85	60~85	73~85	40~83	42~85	43~85	60~85	73~85	50~83	47~85	49~85	59~85	73~85	53~83	51~85	53~85	58~85	73~85	[DEG]
	1	1	1	1	1	1	1	1	1	1	1	1	1	1	1	1	1	1	1	1	1	1	1	1	1	
	8.7t	8.7t	8.7t	8.7t	8.7t	8.7t	8.7t	8.7t	8.7t	8.7t	8.7t	8.7t	8.7t	8.7t	8.7t	8.7t	8.7t	8.7t	8.7t	8.7t	8.7t	8.7t	8.7t	8.7t	8.7t	

FLJ	1.6m + 7.4m	28.9 t	8.0m x 7.5m	360 °	JPN

m	12.8	12.8	12.8	12.8	12.8	25.8	25.8	25.8	25.8	25.8	30.1	30.1	30.1	30.1	30.1	30.1	30.1	30.1	30.1	30.1	34.4	34.4	34.4	34.4	34.4	m
°	5	15	30	45	60	5	15	30	45	60	5	15	30	45	60	5	15	30	45	60	5	15	30	45	60	°
3.0	7.3																									3.0
3.5	7.3	7.3																								3.5
4.0	7.3	7.3				7.3																				4.0
4.5	7.3	7.3				7.3																				4.5
5.0	7.3	7.3				7.3	7.3				7.3					7.3										5.0
6.0	7.3	7.3	7.3			7.3	7.3				7.3	7.3				7.3	7.3				7.3	7.3				6.0
7.0	7.3	7.3	7.3	5.9		7.3	7.3	7.3			7.3	7.3	7.3			7.3	7.3	7.3			7.3	7.3				7.0
8.0	7.3	7.3	7.0	5.7		7.3	7.3	7.3	6.2		7.3	7.3	7.3			7.3	7.3	7.3			7.3	7.3	7.3			8.0
9.0	7.3	7.3	6.6	5.5		7.3	7.3	7.3	6.0	4.5	7.3	7.3	7.3	6.1		7.3	7.3	7.3	6.1		7.3	7.3	7.3	6.2		9.0
10.0	7.3	7.3	6.3	5.4		7.3	7.3	7.3	5.9	4.5	7.3	7.3	7.3	6.0	4.5	7.3	7.3	7.3	6.0	4.5	7.3	7.3	7.3	6.1	4.5	10.0
11.0	7.3	7.0	6.1	5.2		7.3	7.3	7.3	5.8	4.4	7.3	7.3	7.3	5.9	4.5	7.3	7.3	7.3	5.9	4.5	7.3	7.3	7.3	6.0	4.5	11.0
12.0	7.1	6.5	5.8			7.3	7.3	7.0	5.6		7.3	7.3	7.3	5.8	4.4	7.3	7.3	7.3	5.8	4.4	7.3	7.3	7.3	5.9	4.4	12.0
14.0	6.1	5.9	5.4			7.3	7.3	6.6	5.4		7.3	7.3	6.9	5.6		7.3	7.3	6.9	5.6		7.3	7.3	7.2	5.7	4.4	14.0
16.0	5.4	5.3				7.3	7.3	6.2	5.2		7.3	7.3	6.5	5.4		7.3	7.3	6.5	5.4		7.3	7.3	6.8	5.5		16.0
18.0	4.9					7.3	6.9	5.9	5.1		7.3	7.3	6.2	5.2		7.3	7.3	6.2	5.2		7.3	7.3	6.5	5.3		18.0
20.0						7.1	6.4	5.7			7.3	7.0	5.9	5.1		7.3	7.0	5.9	5.1		7.3	7.3	6.2	5.2		20.0
22.0						6.5	6.0	5.4			7.3	6.6	5.7			7.3	6.6	5.7			7.3	7.1	6.0	5.1		22.0
24.0						6.0	5.7	5.3			6.8	6.2	5.5			6.8	6.2	5.5			7.3	6.7	5.7			24.0
26.0						5.5	5.4				6.2	5.8	5.3			6.2	5.8	5.3			7.0	6.3	5.6			26.0
28.0						5.1	5.1				5.8	5.5				5.8	5.5				6.4	6.0	5.4			28.0
30.0						4.8					5.1	5.2				5.4	5.3				5.4	5.5	5.3			30.0
32.0											4.3	4.3				5.1	5.1				4.5	4.7				32.0
34.0											3.5					4.3					3.8	3.9				34.0
36.0																					3.1	3.2				36.0
38.0																					2.5					38.0
40.0																										40.0
44.0																										44.0
48.0																										48.0
52.0																										52.0
56.0																										56.0
60.0																										60.0
64.0																										64.0
68.0																										68.0
72.0																										72.0
1	0	0	0	0		46	46	46	46	46	92	92	92	92	92	46	46	46	46	46	92	92	92	92	92	1
2	0	0	0	0		46	46	46	46	46	46	46	46	46	46	46	46	46	46	46	46	46	46	46	46	2
3	0	0	0	0		46	46	46	46	46	46	46	46	46	46	46	46	46	46	46	46	46	46	46	46	3
4	0	0	0	0		0	0	0	0	0	0	0	0	0	0	46	46	46	46	46	46	46	46	46	46	4
5	0	0	0	0		0	0	0	0	0	0	0	0	0	0	0	0	0	0	0	0	0	0	0	0	5
ID	1	1	1	1		66	66	66	66	66	67	67	67	67	67	54	54	54	54	54	55	55	55	55	55	ID
[DEG]	0~83	0~85	0~85	0~85		22~83	31~85	45~85	61~85	74~85	23~83	31~85	44~85	62~85	77~85	22~83	31~85	43~85	61~85	77~85	23~83	31~85	47~85	59~85	76~85	[DEG]
	1	1	1	1		1	1	1	1	1	1	1	1	1	1	1	1	1	1	1	1	1	1	1	1	
	8.7t	8.7t	8.7t	8.7t		8.7t	8.7t	8.7t	8.7t	8.7t	8.7t	8.7t	8.7t	8.7t	8.7t	8.7t	8.7t	8.7t	8.7t	8.7t	8.7t	8.7t	8.7t	8.7t	8.7t	

m	34.4	34.4	34.4	34.4	34.4	38.7	38.7	38.7	38.7	38.7	43.0	43.0	43.0	43.0	43.0	43.0	43.0	43.0	43.0	43.0	47.4	47.4	47.4	47.4	47.4	m
°	5	15	30	45	60	5	15	30	45	60	5	15	30	45	60	5	15	30	45	60	5	15	30	45	60	°
3.0																										3.0
3.5																										3.5
4.0																										4.0
4.5																										4.5
5.0																										5.0
6.0	7.3	7.3																								6.0
7.0	7.3	7.3				7.3	7.3																			7.0
8.0	7.3	7.3	7.3			7.3	7.3				7.3	7.3				7.3	7.3					7.3				8.0
9.0	7.3	7.3	7.3	6.2		7.3	7.3	7.3			7.3	7.3	7.3			7.3	7.3				7.3	7.3				9.0
10.0	7.3	7.3	7.3	6.1	4.5	7.3	7.3	7.3	6.2		7.3	7.3	7.3			7.3	7.3	7.3			7.3	7.3	7.3			10.0
11.0	7.3	7.3	7.3	6.0	4.5	7.3	7.3	7.3	6.1	4.5	7.3	7.3	7.3	6.1	4.5	7.3	7.3	7.3	6.1		7.3	7.3	7.3			11.0
12.0	7.3	7.3	7.3	5.9	4.4	7.3	7.3	7.3	6.0	4.5	7.3	7.3	7.3	6.0	4.5	7.3	7.3	7.3	6.0	4.5	7.3	7.3	7.3	6.1	4.5	12.0
14.0	7.3	7.3	7.2	5.7	4.4	7.3	7.3	7.3	5.8	4.4	7.3	7.3	7.3	5.8	4.4	7.3	7.3	7.3	5.8	4.4	7.3	7.3	7.3	5.9	4.4	14.0
16.0	7.3	7.3	6.8	5.5		7.3	7.3	7.0	5.6		7.3	7.3	7.3	5.7	4.4	7.3	7.3	7.3	5.7	4.4	7.3	7.3	7.3	5.8	4.4	16.0
18.0	7.3	7.3	6.5	5.3		7.3	7.3	6.7	5.4		7.3	7.3	6.9	5.5		7.3	7.3	6.9	5.5		7.3	7.3	7.1	5.6		18.0
20.0	7.3	7.3	6.2	5.2		7.3	7.3	6.4	5.3		7.3	7.3	6.7	5.4		7.3	7.3	6.7	5.4		7.3	7.3	6.9	5.5		20.0
22.0	7.3	7.1	6.0	5.1		7.3	7.3	6.2	5.2		7.3	7.3	6.4	5.3		7.3	7.3	6.4	5.3		7.3	7.3	6.6	5.4		22.0
24.0	7.3	6.7	5.7			7.3	7.1	6.0	5.1		7.3	7.3	6.2	5.2		6.8	6.7	6.2	5.2		7.3	7.3	6.4	5.3		24.0
26.0	7.0	6.3	5.6			7.3	6.7	5.8			7.3	7.2	6.0	5.1		6.2	6.1	6.0	5.1		7.3	7.3	6.2	5.2		26.0
28.0	6.5	6.0	5.4			6.7	6.4	5.6			6.6	6.8	5.8			5.7	5.6	5.6			6.7	6.9	6.0	5.1		28.0
30.0	6.0	5.7	5.3			5.7	5.9	5.4			5.6	5.8	5.6			5.2	5.2	5.2			5.7	5.9	5.8			30.0
32.0	5.4	5.4				4.9	5.0	5.2			4.8	4.9	5.1			4.7	4.7	4.7			4.8	5.0	5.2			32.0
34.0	4.6	4.7				4.1	4.3				4.0	4.2	4.3			4.3	4.3	4.3			4.1	4.2	4.4			34.0
36.0	4.0	4.1				3.5	3.6				3.4	3.5	3.6			3.9	3.9	3.9			3.4	3.6	3.7			36.0
38.0	3.4					2.9	3.0				2.8	2.9				3.5	3.5				2.8	3.0	3.1			38.0
40.0						2.3					2.2	2.3				3.2	3.2				2.3	2.4				40.0
44.0											1.3					2.6					1.3	1.4				44.0
48.0																										48.0
52.0																										52.0
56.0																										56.0
60.0																										60.0
64.0																										64.0
68.0																										68.0
72.0																										72.0
1	46	46	46	46	46	92	92	92	92	92	92	92	92	92	92	0	0	0	0	0	92	92	92	92	92	1
2	46	46	46	46	46	46	46	46	46	46	92	92	92	92	92	46	46	46	46	46	92	92	92	92	92	2
3	46	46	46	46	46	46	46	46	46	46	46	46	46	46	46	92	92	92	92	92	92	92	92	92	92	3
4	46	46	46	46	46	46	46	46	46	46	46	46	46	46	46	92	92	92	92	92	46	46	46	46	46	4
5	46	46	46	46	46	46	46	46	46	46	46	46	46	46	46	92	92	92	92	92	46	46	46	46	46	5
ID	49	49	49	49	49	50	50	50	50	50	42	42	42	42	42	21	21	21	21	21	38	38	38	38	38	ID
[DEG]	23~83	31~85	46~85	59~85	75~85	30~83	30~85	45~85	60~85	75~85	30~83	30~85	44~85	61~85	74~85	17~83	31~85	45~85	61~85	74~85	38~83	39~85	47~85	60~85	74~85	[DEG]
	1	1	1	1	1	1	1	1	1	1	1	1	1	1	1	1	1	1	1	1	1	1	1	1	1	
	8.7t	8.7t	8.7t	8.7t	8.7t	8.7t	8.7t	8.7t	8.7t	8.7t	8.7t	8.7t	8.7t	8.7t	8.7t	8.7t	8.7t	8.7t	8.7t	8.7t	8.7t	8.7t	8.7t	8.7t	8.7t	

フルオートラフィングジブ

FLJ	1.6m + 7.4m	28.9 t	8.0m x 7.5m	360 °	JPN

m	47.4	47.4	47.4	47.4	47.4	51.7	51.7	51.7	51.7	51.7	51.7	51.7	51.7	51.7	51.7	56.0	56.0	56.0	56.0	56.0	60.0	60.0	60.0	60.0	60.0	m
°	5	15	30	45	60	5	15	30	45	60	5	15	30	45	60	5	15	30	45	60	5	15	30	45	60	°
3.0																										3.0
3.5																										3.5
4.0																										4.0
4.5																										4.5
5.0																										5.0
6.0																										6.0
7.0																										7.0
8.0		7.3																								8.0
9.0	7.3	7.3					7.3					6.4														9.0
10.0	7.3	7.3	7.3			7.3	7.3				6.4	6.4					6.3									10.0
11.0	7.3	7.3	7.3			7.3	7.3	7.3			6.4	6.4	6.4			6.3	6.3					5.3				11.0
12.0	7.3	7.3	7.3	6.1	4.5	7.3	7.3	7.3			6.4	6.4	6.4			6.3	6.3	6.3			5.3	5.3				12.0
14.0	7.3	7.3	7.3	5.9	4.4	7.3	7.3	7.3	6.0	4.5	6.4	6.4	6.4	6.0	4.5	6.3	6.3	6.3	6.0	4.5	5.3	5.3	5.3			14.0
16.0	7.3	7.3	7.3	5.8	4.4	7.3	7.3	7.3	5.8	4.4	6.4	6.4	6.4	5.8	4.4	6.3	6.3	6.3	5.9	4.4	5.3	5.3	5.3	5.3	4.4	16.0
18.0	7.3	7.3	7.1	5.6		7.3	7.3	7.3	5.7	4.3	6.4	6.4	6.4	5.7	4.3	6.3	6.3	6.3	5.7	4.4	5.3	5.3	5.3	5.3	4.4	18.0
20.0	7.3	7.3	6.9	5.5		7.3	7.3	7.0	5.5		6.4	6.4	6.4	5.5		6.3	6.3	6.3	5.6		5.3	5.3	5.3	5.3	4.3	20.0
22.0	7.3	7.3	6.6	5.4		7.3	7.3	6.8	5.4		6.4	6.4	6.4	5.4		6.3	6.3	6.3	5.5		5.3	5.3	5.3	5.3		22.0
24.0	7.3	7.3	6.4	5.3		7.3	7.3	6.5	5.3		6.4	6.4	6.4	5.3		6.3	6.3	6.3	5.4		5.3	5.3	5.3	5.3		24.0
26.0	7.3	7.3	6.2	5.2		7.3	7.3	6.3	5.2		6.4	6.4	6.3	5.2		6.3	6.3	6.3	5.3		5.3	5.3	5.1	5.0		26.0
28.0	7.0	6.8	6.0	5.1		6.8	7.0	6.1	5.2		6.4	6.2	6.1	5.2		6.3	6.3	6.1	5.2		5.1	4.9	4.8	4.7		28.0
30.0	6.2	6.4	5.8			5.8	6.0	6.0	5.1		5.9	5.8	5.7	5.1		6.1	6.0	5.8	5.1		4.7	4.5	4.4	4.4		30.0
32.0	5.4	5.5	5.6			5.0	5.2	5.4			5.5	5.5	5.4			5.2	5.4	5.6	5.1		4.3	4.2	4.1	4.1		32.0
34.0	4.6	4.8	4.9			4.2	4.4	4.6			4.8	5.0	5.0			4.5	4.6	4.8			4.0	3.9	3.8	3.8		34.0
36.0	4.0	4.1	4.2			3.6	3.7	3.9			4.2	4.3	4.5			3.8	3.9	4.1			3.7	3.7	3.6			36.0
38.0	3.4	3.5	3.6			3.0	3.1	3.3			3.6	3.7	3.8			3.2	3.4	3.5			3.2	3.3	3.4			38.0
40.0	2.9	3.0				2.4	2.6	2.7			3.1	3.2	3.3			2.7	2.8	3.0			2.6	2.8	2.9			40.0
44.0	1.9	2.0				1.5	1.6				2.1	2.2				1.7	1.8	1.9			1.7	1.8	1.9			44.0
48.0											1.3	1.4														48.0
52.0																										52.0
56.0																										56.0
60.0																										60.0
64.0																										64.0
68.0																										68.0
72.0																										72.0
1	46	46	46	46	46	92	92	92	92	92	46	46	46	46	46	92	92	92	92	92	100	100	100	100	100	1
2	92	92	92	92	92	92	92	92	92	92	92	92	92	92	92	92	92	92	92	92	100	100	100	100	100	2
3	92	92	92	92	92	92	92	92	92	92	92	92	92	92	92	92	92	92	92	92	100	100	100	100	100	3
4	92	92	92	92	92	92	92	92	92	92	92	92	92	92	92	92	92	92	92	92	100	100	100	100	100	4
5	46	46	46	46	46	46	46	46	46	46	92	92	92	92	92	92	92	92	92	92	100	100	100	100	100	5
ID	31	31	31	31	31	32	32	32	32	32	23	23	23	23	23	24	24	24	24	24	16	16	16	16	16	ID
[DEG]	38~83	39~85	47~85	59~85	74~85	44~83	45~85	46~85	61~85	74~85	38~83	39~85	46~85	61~85	74~85	49~83	50~85	51~85	59~85	74~85	53~83	54~85	55~85	60~85	74~85	[DEG]
	1	1	1	1	1	1	1	1	1	1	1	1	1	1	1	1	1	1	1	1	1	1	1	1	1	
	8.7t	8.7t	8.7t	8.7t	8.7t	8.7t	8.7t	8.7t	8.7t	8.7t	8.7t	8.7t	8.7t	8.7t	8.7t	8.7t	8.7t	8.7t	8.7t	8.7t	8.7t	8.7t	8.7t	8.7t	8.7t	

FLJ	1.6m + 12.4m	28.9 t	8.0m x 7.5m	360 °	JPN

m	12.8	12.8	12.8	12.8	12.8	25.8	25.8	25.8	25.8	25.8	30.1	30.1	30.1	30.1	30.1	30.1	30.1	30.1	30.1	30.1	34.4	34.4	34.4	34.4	34.4	m
°	5	15	30	45	60	5	15	30	45	60	5	15	30	45	60	5	15	30	45	60	5	15	30	45	60	°
3.0																										3.0
3.5	4.3																									3.5
4.0	4.3																									4.0
4.5	4.3																									4.5
5.0	4.3																									5.0
6.0	4.3	4.3				4.3																				6.0
7.0	4.3	4.3				4.3	4.3				4.3					4.3										7.0
8.0	4.3	4.3				4.3	4.3				4.3	4.3				4.3	4.3				4.3	4.3				8.0
9.0	4.3	4.3	4.3			4.3	4.3				4.3	4.3				4.3	4.3				4.3	4.3				9.0
10.0	4.3	4.3	4.1			4.3	4.3	4.3			4.3	4.3				4.3	4.3				4.3	4.3				10.0
11.0	4.3	4.3	3.9	3.2		4.3	4.3	4.3			4.3	4.3	4.3			4.3	4.3	4.3			4.3	4.3	4.3			11.0
12.0	4.3	4.3	3.7	3.1		4.3	4.3	4.3	3.3		4.3	4.3	4.3			4.3	4.3	4.3			4.3	4.3	4.3			12.0
14.0	4.1	3.8	3.4	2.9		4.3	4.3	4.0	3.2	2.4	4.3	4.3	4.2	3.2	2.4	4.3	4.3	4.2	3.2	2.4	4.3	4.3	4.3	3.3		14.0
16.0	3.6	3.4	3.1	2.7		4.3	4.3	3.7	3.0	2.4	4.3	4.3	3.9	3.1	2.4	4.3	4.3	3.9	3.1	2.4	4.3	4.3	4.0	3.1	2.4	16.0
18.0	3.2	3.1	2.9			4.3	4.2	3.5	2.9		4.3	4.3	3.7	3.0		4.3	4.3	3.7	3.0		4.3	4.3	3.8	3.0	2.3	18.0
20.0	2.9	2.9				4.3	3.9	3.3	2.8		4.3	4.2	3.5	2.9		4.3	4.2	3.5	2.9		4.3	4.3	3.6	2.9		20.0
22.0	2.6	2.7				4.0	3.6	3.1	2.7		4.3	3.9	3.3	2.8		4.3	3.9	3.3	2.8		4.3	4.2	3.4	2.8		22.0
24.0						3.7	3.4	3.0			4.1	3.7	3.1	2.7		4.1	3.7	3.1	2.7		4.3	3.9	3.3	2.8		24.0
26.0						3.4	3.2	2.9			3.8	3.4	3.0			3.8	3.4	3.0			4.1	3.7	3.1	2.7		26.0
28.0						3.1	3.0	2.8			3.5	3.3	2.9			3.5	3.3	2.9			3.8	3.5	3.0			28.0
30.0						2.9	2.8				3.2	3.1	2.8			3.2	3.1	2.8			3.6	3.3	2.9			30.0
32.0						2.7	2.7				3.0	2.9	2.7			3.0	2.9	2.7			3.3	3.1	2.8			32.0
34.0						2.5					2.8	2.8				2.8	2.8				3.1	3.0	2.7			34.0
36.0											2.7	2.7				2.7	2.7				3.0	2.9				36.0
38.0											2.5					2.5					2.8	2.8				38.0
40.0																					2.7	2.7				40.0
44.0																										44.0
48.0																										48.0
52.0																										52.0
56.0																										56.0
60.0																										60.0
64.0																										64.0
68.0																										68.0
72.0																										72.0
1	0	0	0	0		46	46	46	46	46	92	92	92	92	92	46	46	46	46	46	92	92	92	92	92	1
2	0	0	0	0		46	46	46	46	46	46	46	46	46	46	46	46	46	46	46	46	46	46	46	46	2
3	0	0	0	0		46	46	46	46	46	46	46	46	46	46	46	46	46	46	46	46	46	46	46	46	3
4	0	0	0	0		0	0	0	0	0	0	0	0	0	0	46	46	46	46	46	46	46	46	46	46	4
5	0	0	0	0		0	0	0	0	0	0	0	0	0	0	0	0	0	0	0	0	0	0	0	0	5
ID	1	1	1	1		66	66	66	66	66	67	67	67	67	67	54	54	54	54	54	55	55	55	55	55	ID
[DEG]	0~83	0~85	0~85	0~85		25~83	27~85	47~85	58~85	76~85	18~83	28~85	46~85	59~85	75~85	17~83	27~85	45~85	59~85	75~85	19~83	33~85	44~85	60~85	74~85	[DEG]
	1	1	1	1		1	1	1	1	1	1	1	1	1	1	1	1	1	1	1	1	1	1	1	1	
	8.7t	8.7t	8.7t	8.7t		8.7t	8.7t	8.7t	8.7t	8.7t	8.7t	8.7t	8.7t	8.7t	8.7t	8.7t	8.7t	8.7t	8.7t	8.7t	8.7t	8.7t	8.7t	8.7t	8.7t	

FLJ	1.6m + 12.4m	28.9 t	8.0m x 7.5m	360 °	JPN

m	34.4	34.4	34.4	34.4	34.4	38.7	38.7	38.7	38.7	38.7	43.0	43.0	43.0	43.0	43.0	43.0	43.0	43.0	43.0	43.0	47.4	47.4	47.4	47.4	47.4	m
°	5	15	30	45	60	5	15	30	45	60	5	15	30	45	60	5	15	30	45	60	5	15	30	45	60	°
3.0																										3.0
3.5																										3.5
4.0																										4.0
4.5																										4.5
5.0																										5.0
6.0																										6.0
7.0	4.3																									7.0
8.0	4.3	4.3				4.3																				8.0
9.0	4.3	4.3				4.3	4.3				4.3					4.3										9.0
10.0	4.3	4.3				4.3	4.3				4.3	4.3				4.3	4.3				4.3					10.0
11.0	4.3	4.3	4.3			4.3	4.3				4.3	4.3				4.3	4.3				4.3	4.3				11.0
12.0	4.3	4.3	4.3			4.3	4.3	4.3			4.3	4.3				4.3	4.3				4.3	4.3				12.0
14.0	4.3	4.3	4.2	3.3		4.3	4.3	4.2	3.3		4.3	4.3	4.2			4.3	4.3	4.1			4.3	4.3	4.2			14.0
16.0	4.3	4.3	4.0	3.1	2.4	4.3	4.3	4.0	3.2	2.4	4.3	4.3	4.0	3.2	2.4	4.3	4.3	3.9	3.2		4.3	4.3	4.0	3.3		16.0
18.0	4.3	4.3	3.8	3.0	2.3	4.3	4.3	3.9	3.1	2.3	4.3	4.3	3.9	3.1	2.4	4.3	4.3	3.7	3.1	2.4	4.3	4.3	3.8	3.2	2.4	18.0
20.0	4.3	4.3	3.6	2.9		4.3	4.3	3.7	3.0	2.3	4.3	4.3	3.7	3.0	2.3	4.3	4.3	3.6	3.0	2.3	4.3	4.3	3.7	3.1	2.3	20.0
22.0	4.3	4.2	3.4	2.8		4.3	4.3	3.6	2.9		4.3	4.3	3.6	2.9		4.3	4.2	3.5	2.9		4.3	4.3	3.6	3.0	2.3	22.0
24.0	4.3	3.9	3.3	2.8		4.3	4.1	3.4	2.8		4.3	4.2	3.5	2.9		4.3	4.0	3.4	2.9		4.3	4.2	3.4	2.9		24.0
26.0	4.1	3.7	3.1	2.7		4.3	3.9	3.3	2.7		4.3	4.0	3.4	2.8		4.3	3.8	3.3	2.8		4.3	4.0	3.4	2.8		26.0
28.0	3.8	3.5	3.0			4.2	3.7	3.1	2.7		4.3	3.8	3.3	2.7		4.2	3.7	3.2	2.7		4.3	3.8	3.3	2.8		28.0
30.0	3.6	3.3	2.9			3.9	3.5	3.0			4.2	3.7	3.1	2.7		4.0	3.5	3.1	2.7		4.3	3.7	3.2	2.7		30.0
32.0	3.3	3.1	2.8			3.7	3.4	2.9			4.0	3.5	3.0			3.9	3.4	3.0			4.1	3.5	3.1	2.7		32.0
34.0	3.1	3.0	2.7			3.4	3.2	2.8			3.7	3.4	2.9			3.7	3.3	2.9			3.9	3.4	3.0	2.6		34.0
36.0	3.0	2.9				3.2	3.1	2.8			3.5	3.2	2.9			3.5	3.2	2.8			3.8	3.3	2.9			36.0
38.0	2.8	2.8				3.1	2.9	2.7			3.3	3.1	2.8			3.3	3.1	2.8			3.5	3.2	2.9			38.0
40.0	2.7	2.7				2.9	2.8				2.9	3.0	2.7			3.2	3.0	2.7			2.9	3.1	2.8			40.0
44.0						2.1	2.2				2.0	2.1				2.7	2.8				2.0	2.1	2.3			44.0
48.0												1.3				2.2	2.3					1.3				48.0
52.0																										52.0
56.0																										56.0
60.0																										60.0
64.0																										64.0
68.0																										68.0
72.0																										72.0
% 1	46	46	46	46	46	92	92	92	92	92	92	92	92	92	92	0	0	0	0	0	92	92	92	92	92	1
% 2	46	46	46	46	46	46	46	46	46	46	92	92	92	92	92	46	46	46	46	46	92	92	92	92	92	2
% 3	46	46	46	46	46	46	46	46	46	46	46	46	46	46	46	92	92	92	92	92	92	92	92	92	92	3
% 4	46	46	46	46	46	46	46	46	46	46	46	46	46	46	46	92	92	92	92	92	46	46	46	46	46	4
% 5	46	46	46	46	46	46	46	46	46	46	46	46	46	46	46	92	92	92	92	92	46	46	46	46	46	5
ID	49	49	49	49	49	50	50	50	50	50	42	42	42	42	42	21	21	21	21	21	38	38	38	38	38	ID
[DEG]	18~83	33~85	44~85	60~85	74~85	19~83	33~85	43~85	58~85	76~85	39~83	33~85	42~85	59~85	75~85	21~83	34~85	43~85	59~85	75~85	45~83	40~85	48~85	60~85	75~85	[DEG]
	1	1	1	1	1	1	1	1	1	1	1	1	1	1	1	1	1	1	1	1	1	1	1	1	1	
	8.7t	8.7t	8.7t	8.7t	8.7t	8.7t	8.7t	8.7t	8.7t	8.7t	8.7t	8.7t	8.7t	8.7t	8.7t	8.7t	8.7t	8.7t	8.7t	8.7t	8.7t	8.7t	8.7t	8.7t	8.7t	

m	47.4	47.4	47.4	47.4	47.4	51.7	51.7	51.7	51.7	51.7	51.7	51.7	51.7	51.7	51.7	56.0	56.0	56.0	56.0	56.0	60.0	60.0	60.0	60.0	60.0	m
°	5	15	30	45	60	5	15	30	45	60	5	15	30	45	60	5	15	30	45	60	5	15	30	45	60	°
3.0																										3.0
3.5																										3.5
4.0																										4.0
4.5																										4.5
5.0																										5.0
6.0																										6.0
7.0																										7.0
8.0																										8.0
9.0																										9.0
10.0	4.3																									10.0
11.0	4.3	4.3				4.3					4.3															11.0
12.0	4.3	4.3				4.3	4.3				4.3	4.3				4.3										12.0
14.0	4.3	4.3	4.1			4.3	4.3				4.3	4.3				4.3	4.3				3.3	3.3				14.0
16.0	4.3	4.3	4.0	3.3		4.3	4.3	3.9			4.3	4.3	3.9			4.3	4.3	3.8			3.3	3.3				16.0
18.0	4.3	4.3	3.8	3.2	2.4	4.3	4.3	3.8	3.2	2.4	4.3	4.3	3.7	3.2	2.4	4.3	4.3	3.7	3.2		3.3	3.3	3.3			18.0
20.0	4.3	4.3	3.7	3.1	2.3	4.3	4.3	3.7	3.1	2.3	4.3	4.3	3.6	3.1	2.3	4.3	4.3	3.6	3.1	2.3	3.3	3.3	3.3	3.1	2.3	20.0
22.0	4.3	4.3	3.5	3.0	2.3	4.3	4.3	3.5	3.0	2.3	4.3	4.2	3.5	3.0	2.3	4.3	4.2	3.5	3.1	2.3	3.3	3.3	3.3	3.0	2.3	22.0
24.0	4.3	4.1	3.4	2.9		4.3	4.1	3.4	2.9		4.3	4.0	3.4	2.9		4.3	4.0	3.4	3.0	2.3	3.3	3.3	3.3	3.0	2.3	24.0
26.0	4.3	3.9	3.3	2.8		4.3	3.9	3.3	2.9		4.3	3.9	3.2	2.9		4.3	3.9	3.2	2.9		3.3	3.3	3.2	2.9		26.0
28.0	4.3	3.8	3.2	2.8		4.3	3.8	3.2	2.8		4.3	3.7	3.2	2.8		4.3	3.7	3.2	2.9		3.3	3.3	3.1	2.8		28.0
30.0	4.2	3.6	3.1	2.7		4.2	3.7	3.1	2.8		4.1	3.6	3.1	2.8		4.1	3.6	3.1	2.8		3.3	3.3	3.0	2.8		30.0
32.0	4.0	3.5	3.0	2.7		4.1	3.5	3.1	2.7		4.0	3.5	3.0	2.7		4.0	3.5	3.0	2.7		3.3	3.3	3.0	2.7		32.0
34.0	3.9	3.4	3.0	2.6		3.9	3.4	3.0	2.7		3.8	3.3	2.9	2.7		3.9	3.4	2.9	2.7		3.3	3.3	2.9	2.7		34.0
36.0	3.7	3.3	2.9			3.8	3.3	2.9	2.6		3.7	3.2	2.9	2.6		3.7	3.3	2.9	2.7		3.3	3.2	2.8	2.6		36.0
38.0	3.6	3.2	2.8			3.6	3.2	2.8			3.6	3.1	2.8			3.6	3.2	2.8	2.6		3.1	3.1	2.8	2.6		38.0
40.0	3.4	3.1	2.8			3.0	3.1	2.8			3.4	3.1	2.7			3.2	3.1	2.7			2.9	2.9	2.7	2.6		40.0
44.0	2.5	2.7	2.7			2.1	2.3	2.5			2.7	2.8	2.6			2.3	2.5	2.6			2.2	2.4	2.5			44.0
48.0	1.7	1.8				1.3	1.4				1.9	2.0				1.5	1.6	1.8			1.4	1.6	1.8			48.0
52.0											1.2	1.3														52.0
56.0																										56.0
60.0																										60.0
64.0																										64.0
68.0																										68.0
72.0																										72.0
% 1	46	46	46	46	46	92	92	92	92	92	46	46	46	46	46	92	92	92	92	92	100	100	100	100	100	1
% 2	92	92	92	92	92	92	92	92	92	92	92	92	92	92	92	92	92	92	92	92	100	100	100	100	100	2
% 3	92	92	92	92	92	92	92	92	92	92	92	92	92	92	92	92	92	92	92	92	100	100	100	100	100	3
% 4	92	92	92	92	92	92	92	92	92	92	92	92	92	92	92	92	92	92	92	92	100	100	100	100	100	4
% 5	46	46	46	46	46	46	46	46	46	46	92	92	92	92	92	92	92	92	92	92	100	100	100	100	100	5
ID	31	31	31	31	31	32	32	32	32	32	23	23	23	23	23	24	24	24	24	24	16	16	16	16	16	ID
[DEG]	39~83	40~85	49~85	60~85	75~85	45~83	46~85	48~85	59~85	74~85	39~83	40~85	48~85	59~85	74~85	49~83	51~85	52~85	58~85	74~85	53~83	54~85	56~85	61~85	74~85	[DEG]
	1	1	1	1	1	1	1	1	1	1	1	1	1	1	1	1	1	1	1	1	1	1	1	1	1	
	8.7t	8.7t	8.7t	8.7t	8.7t	8.7t	8.7t	8.7t	8.7t	8.7t	8.7t	8.7t	8.7t	8.7t	8.7t	8.7t	8.7t	8.7t	8.7t	8.7t	8.7t	8.7t	8.7t	8.7t	8.7t	

フルオートラフィングジブ

FLJ	1.6m + 17.4m	28.9 t	8.0m x 7.5m	360 °	JPN

m	12.8	12.8	12.8	12.8	12.8	25.8	25.8	25.8	25.8	25.8	30.1	30.1	30.1	30.1	30.1	30.1	30.1	30.1	30.1	30.1	34.4	34.4	34.4	34.4	34.4	m
°	5	15	30	45	60	5	15	30	45	60	5	15	30	45	60	5	15	30	45	60	5	15	30	45	60	°
3.0																										3.0
3.5																										3.5
4.0																										4.0
4.5																										4.5
5.0	3.3																									5.0
6.0	3.3																									6.0
7.0	3.3																									7.0
8.0	3.3	3.3				3.3					3.3					3.3										8.0
9.0	3.3	3.3				3.3	3.3				3.3					3.3					3.3					9.0
10.0	3.3	3.3				3.3	3.3				3.3	3.3				3.3	3.3				3.3					10.0
11.0	3.3	3.3				3.3	3.3				3.3	3.3				3.3	3.3				3.3	3.3				11.0
12.0	3.3	3.2	2.6			3.3	3.3				3.3	3.3				3.3	3.3				3.3	3.3				12.0
14.0	3.3	2.9	2.4			3.3	3.2	2.6			3.3	3.3	2.7			3.3	3.2	2.6			3.3	3.3				14.0
16.0	2.9	2.6	2.2	1.8		3.3	3.0	2.5			3.3	3.1	2.5			3.3	3.0	2.5			3.3	3.1	2.5			16.0
18.0	2.5	2.3	2.0	1.7		3.3	2.8	2.3	1.9		3.3	2.9	2.4	1.9		3.3	2.9	2.4	1.9		3.3	2.9	2.4	1.9		18.0
20.0	2.3	2.1	1.8	1.6		3.1	2.6	2.2	1.8		3.2	2.7	2.2	1.8	1.5	3.2	2.7	2.2	1.8	1.5	3.3	2.8	2.3	1.8	1.5	20.0
22.0	2.0	1.9	1.7			2.9	2.5	2.0	1.7		3.0	2.6	2.1	1.7	1.5	3.0	2.6	2.1	1.7	1.5	3.1	2.6	2.2	1.8	1.5	22.0
24.0	1.8	1.8	1.6			2.7	2.4	1.9	1.6		2.8	2.5	2.0	1.7		2.8	2.4	2.0	1.7		2.9	2.5	2.1	1.7		24.0
26.0	1.7	1.6				2.5	2.2	1.8	1.6		2.7	2.3	1.9	1.6		2.6	2.3	1.9	1.6		2.7	2.4	2.0	1.6		26.0
28.0	1.5					2.3	2.1	1.7	1.5		2.5	2.2	1.8	1.6		2.5	2.2	1.8	1.6		2.6	2.3	1.9	1.6		28.0
30.0						2.1	1.9	1.7			2.4	2.1	1.7	1.5		2.4	2.1	1.7	1.5		2.5	2.2	1.8	1.5		30.0
32.0						2.0	1.8	1.6			2.2	2.0	1.7			2.2	2.0	1.7			2.4	2.1	1.7	1.5		32.0
34.0						1.8	1.7				2.0	1.9	1.6			2.0	1.9	1.6			2.3	2.0	1.7			34.0
36.0						1.7	1.7				1.9	1.8	1.6			1.9	1.8	1.6			2.1	1.9	1.6			36.0
38.0						1.6	1.6				1.8	1.7				1.8	1.7				2.0	1.8	1.6			38.0
40.0						1.5					1.7	1.6				1.7	1.6				1.9	1.7				40.0
44.0											1.5					1.5					1.7	1.6				44.0
48.0																					1.5					48.0
52.0																										52.0
56.0																										56.0
60.0																										60.0
64.0																										64.0
68.0																										68.0
72.0																										72.0
1	0	0	0	0		46	46	46	46		92	92	92	92	92	46	46	46	46	46	92	92	92	92	92	1
2	0	0	0	0		46	46	46	46		46	46	46	46	46	46	46	46	46	46	46	46	46	46	46	2
3	0	0	0	0		46	46	46	46		46	46	46	46	46	46	46	46	46	46	46	46	46	46	46	3
4	0	0	0	0		0	0	0	0		0	0	0	0	0	46	46	46	46	46	46	46	46	46	46	4
5	0	0	0	0		0	0	0	0		0	0	0	0	0	0	0	0	0	0	0	0	0	0	0	5
ID	1	1	1	1		66	66	66	66		67	67	67	67	67	54	54	54	54	54	55	55	55	55	55	ID
[DEG]	0~83	0~85	0~85	0~85		20~83	30~85	44~85	60~85		21~83	35~85	43~85	57~85	73~85	21~83	35~85	43~85	57~85	73~85	22~83	35~85	46~85	58~85	75~85	[DEG]
	1	1	1	1		1	1	1	1		1	1	1	1	1	1	1	1	1	1	1	1	1	1	1	
	8.7t	8.7t	8.7t	8.7t		8.7t	8.7t	8.7t	8.7t		8.7t	8.7t	8.7t	8.7t	8.7t	8.7t	8.7t	8.7t	8.7t	8.7t	8.7t	8.7t	8.7t	8.7t	8.7t	

m	34.4	34.4	34.4	34.4	34.4	38.7	38.7	38.7	38.7	38.7	43.0	43.0	43.0	43.0	43.0	43.0	43.0	43.0	43.0	43.0	47.4	47.4	47.4	47.4	47.4	m
°	5	15	30	45	60	5	15	30	45	60	5	15	30	45	60	5	15	30	45	60	5	15	30	45	60	°
3.0																										3.0
3.5																										3.5
4.0																										4.0
4.5																										4.5
5.0																										5.0
6.0																										6.0
7.0																										7.0
8.0																										8.0
9.0	3.3																									9.0
10.0	3.3					3.3																				10.0
11.0	3.3	3.3				3.3					3.3					2.9										11.0
12.0	3.3	3.3				3.3	3.3				3.3	3.3				2.9					3.2					12.0
14.0	3.3	3.2				3.3	3.3				3.3	3.2				2.9	2.9				3.2	3.2				14.0
16.0	3.3	3.0	2.5			3.3	3.1	2.5			3.3	3.1				2.9	2.9				3.2	3.1				16.0
18.0	3.3	2.9	2.4	1.9		3.3	2.9	2.4			3.3	2.9	2.4			2.9	2.8	2.3			3.2	2.9	2.4			18.0
20.0	3.2	2.7	2.3	1.8	1.5	3.3	2.8	2.3	1.9		3.3	2.8	2.3	1.9		2.9	2.7	2.2	1.9		3.2	2.8	2.3			20.0
22.0	3.0	2.6	2.2	1.8	1.5	3.1	2.6	2.2	1.8	1.5	3.1	2.7	2.2	1.8	1.5	2.9	2.6	2.2	1.8	1.5	3.1	2.7	2.2	1.8		22.0
24.0	2.9	2.5	2.1	1.7		2.9	2.5	2.1	1.7	1.5	3.0	2.5	2.1	1.8	1.5	2.9	2.5	2.1	1.8	1.5	3.0	2.5	2.1	1.8	1.5	24.0
26.0	2.7	2.4	2.0	1.6		2.8	2.4	2.1	1.7		2.8	2.4	2.1	1.7		2.7	2.4	2.0	1.7		2.9	2.4	2.1	1.7	1.4	26.0
28.0	2.6	2.3	1.9	1.6		2.7	2.3	2.0	1.6		2.7	2.3	2.0	1.6		2.6	2.3	2.0	1.6		2.7	2.4	2.0	1.7		28.0
30.0	2.5	2.2	1.8	1.5		2.5	2.2	1.9	1.6		2.6	2.3	1.9	1.6		2.5	2.2	1.9	1.6		2.6	2.3	1.9	1.6		30.0
32.0	2.4	2.1	1.7	1.5		2.4	2.1	1.8	1.5		2.5	2.2	1.9	1.6		2.4	2.1	1.8	1.6		2.5	2.2	1.9	1.6		32.0
34.0	2.3	2.0	1.7			2.3	2.1	1.7	1.5		2.4	2.1	1.8	1.5		2.3	2.0	1.8	1.5		2.4	2.1	1.8	1.6		34.0
36.0	2.1	1.9	1.6			2.2	2.0	1.7			2.3	2.0	1.7	1.5		2.2	2.0	1.7	1.5		2.3	2.0	1.8	1.5		36.0
38.0	2.0	1.8	1.6			2.2	1.9	1.6			2.2	2.0	1.7			2.2	1.9	1.7			2.2	2.0	1.7	1.5		38.0
40.0	1.9	1.7				2.0	1.9	1.6			2.1	1.9	1.6			2.1	1.9	1.6			2.2	1.9	1.7			40.0
44.0	1.7	1.6				1.8	1.7				2.0	1.8	1.6			2.0	1.8	1.6			2.0	1.8	1.6			44.0
48.0	1.5					1.7	1.6				1.8	1.7				1.8	1.7				1.7	1.7	1.5			48.0
52.0						1.3						1.2				1.7	1.6					1.2				52.0
56.0																1.5										56.0
60.0																										60.0
64.0																										64.0
68.0																										68.0
72.0																										72.0
1	46	46	46	46	46	92	92	92	92	92	92	92	92	92	92	0	0	0	0	0	92	92	92	92	92	1
2	46	46	46	46	46	46	46	46	46	46	92	92	92	92	92	46	46	46	46	46	92	92	92	92	92	2
3	46	46	46	46	46	46	46	46	46	46	46	46	46	46	46	92	92	92	92	92	92	92	92	92	92	3
4	46	46	46	46	46	46	46	46	46	46	46	46	46	46	46	92	92	92	92	92	46	46	46	46	46	4
5	46	46	46	46	46	46	46	46	46	46	46	46	46	46	46	92	92	92	92	92	46	46	46	46	46	5
ID	49	49	49	49	49	50	50	50	50	50	42	42	42	42	42	21	21	21	21	21	38	38	38	38	38	ID
[DEG]	22~83	35~85	46~85	58~85	75~85	23~83	35~85	44~85	59~85	74~85	40~83	35~85	44~85	57~85	74~85	24~83	26~85	44~85	58~85	74~85	45~83	42~85	43~85	61~85	73~85	[DEG]
	1	1	1	1	1	1	1	1	1	1	1	1	1	1	1	1	1	1	1	1	1	1	1	1	1	
	8.7t	8.7t	8.7t	8.7t	8.7t	8.7t	8.7t	8.7t	8.7t	8.7t	8.7t	8.7t	8.7t	8.7t	8.7t	8.7t	8.7t	8.7t	8.7t	8.7t	8.7t	8.7t	8.7t	8.7t	8.7t	

FLJ	1.6m + 17.4m	28.9 t	8.0m x 7.5m	360 °	JPN

m	47.4	47.4	47.4	47.4	47.4	51.7	51.7	51.7	51.7	51.7	51.7	51.7	51.7	51.7	51.7	56.0	56.0	56.0	56.0	56.0	60.0	60.0	60.0	60.0	60.0	m
°	5	15	30	45	60	5	15	30	45	60	5	15	30	45	60	5	15	30	45	60	5	15	30	45	60	°
m 3.0																										3.0
3.5																										3.5
4.0																										4.0
4.5																										4.5
5.0																										5.0
6.0																										6.0
7.0																										7.0
8.0																										8.0
9.0																										9.0
10.0																										10.0
11.0																										11.0
12.0	3.1																									12.0
14.0	3.1	3.1				3.2	3.1				3.2	3.0				2.9										14.0
16.0	3.1	3.0				3.2	3.0				3.1	2.9				2.9	2.9				2.8	2.7				16.0
18.0	3.1	2.9	2.4			3.2	2.9				3.1	2.8				2.9	2.8				2.8	2.6				18.0
20.0	3.1	2.7	2.3			3.1	2.7	2.3			3.0	2.7	2.2			2.9	2.7	2.2			2.8	2.6				20.0
22.0	3.1	2.6	2.2	1.8		3.1	2.6	2.2	1.8		2.9	2.6	2.2	1.8		2.9	2.6	2.2			2.7	2.5	2.1			22.0
24.0	2.9	2.5	2.1	1.8	1.5	2.9	2.5	2.1	1.8	1.5	2.9	2.5	2.1	1.8	1.5	2.8	2.5	2.1	1.8		2.7	2.5	2.1	1.8		24.0
26.0	2.8	2.4	2.0	1.7	1.4	2.8	2.4	2.1	1.7	1.4	2.8	2.4	2.0	1.7	1.4	2.8	2.4	2.0	1.8	1.4	2.6	2.4	2.0	1.8	1.4	26.0
28.0	2.7	2.3	2.0	1.7		2.7	2.3	2.0	1.7	1.4	2.7	2.3	2.0	1.7	1.4	2.7	2.3	2.0	1.7	1.4	2.6	2.3	2.0	1.7	1.4	28.0
30.0	2.6	2.2	1.9	1.6		2.6	2.3	1.9	1.6		2.6	2.2	1.9	1.6		2.6	2.2	1.9	1.7		2.5	2.2	1.9	1.7	1.4	30.0
32.0	2.5	2.2	1.9	1.6		2.5	2.2	1.9	1.6		2.5	2.2	1.9	1.6		2.5	2.2	1.9	1.6		2.5	2.2	1.8	1.6		32.0
34.0	2.4	2.1	1.8	1.6		2.4	2.1	1.8	1.6		2.4	2.1	1.8	1.6		2.4	2.1	1.8	1.6		2.4	2.1	1.8	1.6		34.0
36.0	2.3	2.0	1.8	1.5		2.3	2.0	1.8	1.5		2.3	2.0	1.7	1.5		2.3	2.0	1.8	1.6		2.3	2.0	1.7	1.6		36.0
38.0	2.2	2.0	1.7	1.5		2.3	2.0	1.7	1.5		2.2	2.0	1.7	1.5		2.2	2.0	1.7	1.5		2.2	2.0	1.7	1.5		38.0
40.0	2.1	1.9	1.7			2.2	1.9	1.7	1.5		2.1	1.9	1.7	1.5		2.2	1.9	1.7	1.5		2.2	1.9	1.7	1.5		40.0
44.0	2.0	1.8	1.6			2.1	1.8	1.6			2.0	1.8	1.6			2.0	1.8	1.6			2.0	1.8	1.6	1.5		44.0
48.0	1.9	1.7	1.5			1.8	1.7	1.6			1.9	1.7	1.5			1.9	1.7	1.5			1.9	1.7	1.5			48.0
52.0	1.6	1.7					1.3	1.5			1.7	1.6	1.5			1.3	1.5	1.5			1.2	1.4	1.5			52.0
56.0												1.3														56.0
60.0																										60.0
64.0																										64.0
68.0																										68.0
72.0																										72.0
% 1	46	46	46	46	46	92	92	92	92	92	46	46	46	46	46	92	92	92	92	92	100	100	100	100	100	1
2	92	92	92	92	92	92	92	92	92	92	92	92	92	92	92	92	92	92	92	92	100	100	100	100	100	2
3	92	92	92	92	92	92	92	92	92	92	92	92	92	92	92	92	92	92	92	92	100	100	100	100	100	3
4	92	92	92	92	92	92	92	92	92	92	92	92	92	92	92	92	92	92	92	92	100	100	100	100	100	4
5	46	46	46	46	46	46	46	46	46	46	92	92	92	92	92	92	92	92	92	92	100	100	100	100	100	5
ID	31	31	31	31	31	32	32	32	32	32	23	23	23	23	23	24	24	24	24	24	16	16	16	16	16	ID
[DEG]	40~83	42~85	43~85	61~85	73~85	50~83	47~85	49~85	60~85	73~85	45~83	42~85	43~85	60~85	73~85	50~83	51~85	53~85	58~85	73~85	53~83	55~85	57~85	58~85	73~85	[DEG]
	1	1	1	1	1	1	1	1	1	1	1	1	1	1	1	1	1	1	1	1	1	1	1	1	1	
	8.7t	8.7t	8.7t	8.7t	8.7t	8.7t	8.7t	8.7t	8.7t	8.7t	8.7t	8.7t	8.7t	8.7t	8.7t	8.7t	8.7t	8.7t	8.7t	8.7t	8.7t	8.7t	8.7t	8.7t	8.7t	

FLJ	1.6m + 7.4m	28.9 t	8.0m x 6.2m	360 °	JPN

m	12.8	12.8	12.8	12.8	12.8	25.8	25.8	25.8	25.8	25.8	30.1	30.1	30.1	30.1	30.1	30.1	30.1	30.1	30.1	30.1	34.4	34.4	34.4	34.4	34.4	m
°	5	15	30	45	60	5	15	30	45	60	5	15	30	45	60	5	15	30	45	60	5	15	30	45	60	°
m 3.0	7.3																									3.0
3.5	7.3	7.3																								3.5
4.0	7.3	7.3				7.3																				4.0
4.5	7.3	7.3				7.3																				4.5
5.0	7.3	7.3				7.3	7.3				7.3					7.3										5.0
6.0	7.3	7.3	7.3			7.3	7.3				7.3	7.3				7.3	7.3				7.3	7.3				6.0
7.0	7.3	7.3	7.3	5.9		7.3	7.3	7.3			7.3	7.3	7.3			7.3	7.3	7.3			7.3	7.3				7.0
8.0	7.3	7.3	7.0	5.7		7.3	7.3	7.3	6.2		7.3	7.3	7.3			7.3	7.3	7.3			7.3	7.3	7.3			8.0
9.0	7.3	7.3	6.6	5.5		7.3	7.3	7.3	6.0	4.5	7.3	7.3	7.3	6.1		7.3	7.3	7.3	6.1		7.3	7.3	7.3	6.2		9.0
10.0	7.3	7.3	6.3	5.4		7.3	7.3	7.3	5.9	4.5	7.3	7.3	7.3	6.0	4.5	7.3	7.3	7.3	6.0	4.5	7.3	7.3	7.3	6.1	4.5	10.0
11.0	7.3	7.0	6.1	5.2		7.3	7.3	7.3	5.8	4.4	7.3	7.3	7.3	5.9	4.5	7.3	7.3	7.3	5.9	4.5	7.3	7.3	7.3	6.0	4.5	11.0
12.0	7.1	6.5	5.8			7.3	7.3	7.0	5.6		7.3	7.3	7.3	5.8	4.4	7.3	7.3	7.3	5.8	4.4	7.3	7.3	7.3	5.9	4.4	12.0
14.0	6.1	5.9	5.4			7.3	7.3	6.6	5.4		7.3	7.3	6.9	5.6		7.3	7.3	6.9	5.6		7.3	7.3	7.2	5.7	4.4	14.0
16.0	5.4	5.3				7.3	7.3	6.2	5.2		7.3	7.3	6.5	5.4		7.3	7.3	6.5	5.4		7.3	7.3	6.8	5.5		16.0
18.0	4.9					7.3	6.9	5.9	5.1		7.3	7.3	6.2	5.2		7.3	7.3	6.2	5.2		7.3	7.3	6.5	5.3		18.0
20.0						7.1	6.4	5.7			7.3	7.0	5.9	5.1		7.3	7.0	5.9	5.1		7.3	7.3	6.2	5.2		20.0
22.0						6.5	6.0	5.4			7.3	6.6	5.7			7.3	6.6	5.7			7.3	7.1	6.0	5.1		22.0
24.0						6.0	5.7	5.3			6.5	6.2	5.5			6.8	6.2	5.5			6.8	6.7	5.7			24.0
26.0						5.5	5.4				5.3	5.5	5.3			6.1	5.8	5.3			5.6	5.8	5.6			26.0
28.0						4.8	5.0				4.3	4.5				5.1	5.3				4.6	4.8	5.0			28.0
30.0						4.0					3.5	3.6				4.3	4.4				3.7	3.9	4.1			30.0
32.0											2.7	2.8				3.5	3.6				3.0	3.1				32.0
34.0											2.0					2.9					2.3	2.4				34.0
36.0																					1.7	1.8				36.0
38.0																										38.0
40.0																										40.0
44.0																										44.0
48.0																										48.0
52.0																										52.0
56.0																										56.0
60.0																										60.0
64.0																										64.0
68.0																										68.0
72.0																										72.0
% 1	0	0	0	0		46	46	46	46	46	92	92	92	92	92	46	46	46	46	46	92	92	92	92	92	1
2	0	0	0	0		46	46	46	46	46	46	46	46	46	46	46	46	46	46	46	46	46	46	46	46	2
3	0	0	0	0		46	46	46	46	46	46	46	46	46	46	46	46	46	46	46	46	46	46	46	46	3
4	0	0	0	0		0	0	0	0	0	0	0	0	0	0	46	46	46	46	46	46	46	46	46	46	4
5	0	0	0	0		0	0	0	0	0	0	0	0	0	0	0	0	0	0	0	0	0	0	0	0	5
ID	1	1	1	1		66	66	66	66	66	67	67	67	67	67	54	54	54	54	54	55	55	55	55	55	ID
[DEG]	0~83	0~85	0~85	0~85		22~83	31~85	45~85	61~85	74~85	22~83	31~85	43~85	62~85	77~85	22~83	31~85	43~85	61~85	77~85	30~83	30~85	46~85	59~85	76~85	[DEG]
	1	1	1	1		1	1	1	1	1	1	1	1	1	1	1	1	1	1	1	1	1	1	1	1	
	8.7t	8.7t	8.7t	8.7t		8.7t	8.7t	8.7t	8.7t	8.7t	8.7t	8.7t	8.7t	8.7t	8.7t	8.7t	8.7t	8.7t	8.7t	8.7t	8.7t	8.7t	8.7t	8.7t	8.7t	

フルオートラフィングジブ

FLJ	1.6m + 7.4m	28.9 t	8.0m x 6.2m	360 °	JPN

m	34.4	34.4	34.4	34.4	34.4	38.7	38.7	38.7	38.7	38.7	43.0	43.0	43.0	43.0	43.0	43.0	43.0	43.0	43.0	43.0	47.4	47.4	47.4	47.4	47.4	m
°	5	15	30	45	60	5	15	30	45	60	5	15	30	45	60	5	15	30	45	60	5	15	30	45	60	°
3.0																										3.0
3.5																										3.5
4.0																										4.0
4.5																										4.5
5.0																										5.0
6.0	7.3	7.3																								6.0
7.0	7.3	7.3				7.3	7.3																			7.0
8.0	7.3	7.3	7.3			7.3	7.3				7.3	7.3				7.3	7.3					7.3				8.0
9.0	7.3	7.3	7.3	6.2		7.3	7.3	7.3			7.3	7.3	7.3			7.3	7.3				7.3	7.3				9.0
10.0	7.3	7.3	7.3	6.1	4.5	7.3	7.3	7.3	6.2		7.3	7.3	7.3			7.3	7.3	7.3			7.3	7.3	7.3			10.0
11.0	7.3	7.3	7.3	6.0	4.5	7.3	7.3	7.3	6.1	4.5	7.3	7.3	7.3	6.1	4.5	7.3	7.3	7.3	6.1		7.3	7.3	7.3			11.0
12.0	7.3	7.3	7.3	5.9	4.4	7.3	7.3	7.3	6.0	4.5	7.3	7.3	7.3	6.0	4.5	7.3	7.3	7.3	6.0	4.5	7.3	7.3	7.3	6.1	4.5	12.0
14.0	7.3	7.3	7.2	5.7	4.4	7.3	7.3	7.3	5.8	4.4	7.3	7.3	7.3	5.8	4.4	7.3	7.3	7.3	5.8	4.4	7.3	7.3	7.3	5.9	4.4	14.0
16.0	7.3	7.3	6.8	5.5		7.3	7.3	7.0	5.6		7.3	7.3	7.3	5.7	4.4	7.3	7.3	7.3	5.7	4.4	7.3	7.3	7.3	5.8	4.4	16.0
18.0	7.3	7.3	6.5	5.3		7.3	7.3	6.7	5.4		7.3	7.3	6.9	5.5		7.3	7.3	6.9	5.5		7.3	7.3	7.1	5.6		18.0
20.0	7.3	7.3	6.2	5.2		7.3	7.3	6.4	5.3		7.3	7.3	6.7	5.4		7.3	7.3	6.7	5.4		7.3	7.3	6.9	5.5		20.0
22.0	7.3	7.1	6.0	5.1		7.3	7.3	6.2	5.2		7.3	7.3	6.4	5.3		7.3	7.3	6.4	5.3		7.3	7.3	6.6	5.4		22.0
24.0	7.3	6.7	5.7			7.1	7.1	6.0	5.1		7.0	7.3	6.2	5.2		6.8	6.7	6.2	5.2		7.1	7.3	6.4	5.3		24.0
26.0	6.4	6.3	5.6			5.9	6.2	5.8			5.8	6.1	6.0	5.1		6.2	6.1	6.0	5.1		5.9	6.1	6.2	5.2		26.0
28.0	5.4	5.6	5.4			4.9	5.1	5.4			4.8	5.0	5.3			5.7	5.6	5.6			4.9	5.1	5.4	5.1		28.0
30.0	4.6	4.7	4.9			4.1	4.3	4.5			4.0	4.2	4.4			5.2	5.2	5.2			4.0	4.2	4.5			30.0
32.0	3.9	4.0				3.4	3.5	3.7			3.2	3.4	3.6			4.6	4.7	4.7			3.3	3.5	3.7			32.0
34.0	3.2	3.3				2.7	2.8				2.6	2.7	2.9			3.9	4.1	4.2			2.6	2.8	3.0			34.0
36.0	2.6	2.7				2.1	2.2				2.0	2.1	2.3			3.4	3.5	3.6			2.0	2.2	2.4			36.0
38.0	2.1					1.6	1.7				1.4	1.6				2.9	3.0				1.5	1.6	1.8			38.0
40.0																2.4	2.5									40.0
44.0																1.6										44.0
48.0																										48.0
52.0																										52.0
56.0																										56.0
60.0																										60.0
64.0																										64.0
68.0																										68.0
72.0																										72.0
1	46	46	46	46	46	92	92	92	92	92	92	92	92	92	92	0	0	0	0	0	92	92	92	92	92	1
2	46	46	46	46	46	46	46	46	46	46	92	92	92	92	92	46	46	46	46	46	92	92	92	92	92	2
3	46	46	46	46	46	46	46	46	46	46	46	46	46	46	46	92	92	92	92	92	92	92	92	92	92	3
4	46	46	46	46	46	46	46	46	46	46	46	46	46	46	46	92	92	92	92	92	46	46	46	46	46	4
5	46	46	46	46	46	46	46	46	46	46	46	46	46	46	46	92	92	92	92	92	46	46	46	46	46	5
ID	49	49	49	49	49	50	50	50	50	50	42	42	42	42	42	21	21	21	21	21	38	38	38	38	38	ID
[DEG]	23~83	30~85	46~85	59~85	75~85	34~83	35~85	45~85	60~85	75~85	42~83	43~85	44~85	61~85	74~85	30~83	31~85	45~85	61~85	74~85	47~83	48~85	46~85	59~85	74~85	[DEG]
	1	1	1	1	1	1	1	1	1	1	1	1	1	1	1	1	1	1	1	1	1	1	1	1	1	
	8.7t	8.7t	8.7t	8.7t	8.7t	8.7t	8.7t	8.7t	8.7t	8.7t	8.7t	8.7t	8.7t	8.7t	8.7t	8.7t	8.7t	8.7t	8.7t	8.7t	8.7t	8.7t	8.7t	8.7t	8.7t	

m	47.4	47.4	47.4	47.4	47.4	51.7	51.7	51.7	51.7	51.7	51.7	51.7	51.7	51.7	51.7	56.0	56.0	56.0	56.0	56.0	60.0	60.0	60.0	60.0	60.0	m
°	5	15	30	45	60	5	15	30	45	60	5	15	30	45	60	5	15	30	45	60	5	15	30	45	60	°
3.0																										3.0
3.5																										3.5
4.0																										4.0
4.5																										4.5
5.0																										5.0
6.0																										6.0
7.0																										7.0
8.0		7.3																								8.0
9.0	7.3	7.3					7.3					6.4														9.0
10.0	7.3	7.3	7.3			7.3	7.3				6.4	6.4					6.3									10.0
11.0	7.3	7.3	7.3			7.3	7.3	7.3			6.4	6.4	6.4			6.3	6.3					5.3				11.0
12.0	7.3	7.3	7.3	6.1	4.5	7.3	7.3	7.3			6.4	6.4	6.4			6.3	6.3	6.3			5.3	5.3				12.0
14.0	7.3	7.3	7.3	5.9	4.4	7.3	7.3	7.3	6.0	4.5	6.4	6.4	6.4	6.0	4.5	6.3	6.3	6.3	6.0	4.5	5.3	5.3	5.3			14.0
16.0	7.3	7.3	7.3	5.8	4.4	7.3	7.3	7.3	5.8	4.4	6.4	6.4	6.4	5.8	4.4	6.3	6.3	6.3	5.9	4.4	5.3	5.3	5.3	5.3	4.4	16.0
18.0	7.3	7.3	7.1	5.6		7.3	7.3	7.3	5.7	4.3	6.4	6.4	6.4	5.7	4.3	6.3	6.3	6.3	5.7	4.4	5.3	5.3	5.3	5.3	4.4	18.0
20.0	7.3	7.3	6.9	5.5		7.3	7.3	7.0	5.5		6.4	6.4	6.4	5.5		6.3	6.3	6.3	5.6		5.3	5.3	5.3	5.3	4.3	20.0
22.0	7.3	7.3	6.6	5.4		7.3	7.3	6.8	5.4		6.4	6.4	6.4	5.4		6.3	6.3	6.3	5.5		5.3	5.3	5.3	5.3		22.0
24.0	7.3	7.3	6.4	5.3		7.2	7.3	6.5	5.3		6.4	6.4	6.4	5.3		6.3	6.3	6.3	5.4		5.3	5.3	5.3	5.3		24.0
26.0	6.4	6.7	6.2	5.2		6.0	6.3	6.3	5.2		6.4	6.4	6.3	5.2		6.3	6.3	6.3	5.3		5.3	5.3	5.1	5.0		26.0
28.0	5.4	5.6	5.9	5.1		5.0	5.3	5.5	5.2		5.6	5.8	6.1	5.2		5.3	5.5	5.8	5.2		5.1	4.9	4.8	4.7		28.0
30.0	4.6	4.8	5.0			4.2	4.4	4.6	4.8		4.8	5.0	5.2	5.1		4.4	4.6	4.9	5.0		4.4	4.5	4.4	4.4		30.0
32.0	3.8	4.0	4.2			3.4	3.6	3.9			4.0	4.2	4.4			3.7	3.9	4.1	4.2		3.6	3.8	4.1	4.1		32.0
34.0	3.2	3.3	3.5			2.8	3.0	3.2			3.4	3.6	3.7			3.0	3.2	3.4			3.0	3.2	3.4	3.5		34.0
36.0	2.6	2.8	2.9			2.2	2.4	2.5			2.8	3.0	3.1			2.4	2.6	2.8			2.4	2.6	2.8			36.0
38.0	2.1	2.2	2.3			1.7	1.8	2.0			2.3	2.4	2.6			1.9	2.0	2.2			1.9	2.0	2.2			38.0
40.0	1.6	1.7					1.3	1.4			1.8	1.9	2.1			1.4	1.5	1.7			1.4	1.5	1.7			40.0
44.0																										44.0
48.0																										48.0
52.0																										52.0
56.0																										56.0
60.0																										60.0
64.0																										64.0
68.0																										68.0
72.0																										72.0
1	46	46	46	46	46	92	92	92	92	92	46	46	46	46	46	92	92	92	92	92	100	100	100	100	100	1
2	92	92	92	92	92	92	92	92	92	92	92	92	92	92	92	92	92	92	92	92	100	100	100	100	100	2
3	92	92	92	92	92	92	92	92	92	92	92	92	92	92	92	92	92	92	92	92	100	100	100	100	100	3
4	92	92	92	92	92	92	92	92	92	92	92	92	92	92	92	92	92	92	92	92	100	100	100	100	100	4
5	46	46	46	46	46	46	46	46	46	46	92	92	92	92	92	92	92	92	92	92	100	100	100	100	100	5
ID	31	31	31	31	31	32	32	32	32	32	23	23	23	23	23	24	24	24	24	24	16	16	16	16	16	ID
[DEG]	44~83	45~85	46~85	59~85	74~85	52~83	50~85	51~85	60~85	74~85	49~83	50~85	46~85	60~85	74~85	53~83	54~85	55~85	59~85	74~85	57~83	58~85	59~85	59~85	74~85	[DEG]
	1	1	1	1	1	1	1	1	1	1	1	1	1	1	1	1	1	1	1	1	1	1	1	1	1	
	8.7t	8.7t	8.7t	8.7t	8.7t	8.7t	8.7t	8.7t	8.7t	8.7t	8.7t	8.7t	8.7t	8.7t	8.7t	8.7t	8.7t	8.7t	8.7t	8.7t	8.7t	8.7t	8.7t	8.7t	8.7t	

FLJ	1.6m + 12.4m	28.9 t	8.0m x 6.2m	360 °	JPN

m	12.8	12.8	12.8	12.8	12.8	25.8	25.8	25.8	25.8	25.8	30.1	30.1	30.1	30.1	30.1	30.1	30.1	30.1	30.1	30.1	34.4	34.4	34.4	34.4	34.4	m
°	5	15	30	45	60	5	15	30	45	60	5	15	30	45	60	5	15	30	45	60	5	15	30	45	60	°
3.0																										3.0
3.5	4.3																									3.5
4.0	4.3																									4.0
4.5	4.3																									4.5
5.0	4.3																									5.0
6.0	4.3	4.3				4.3																				6.0
7.0	4.3	4.3				4.3	4.3				4.3					4.3										7.0
8.0	4.3	4.3				4.3	4.3				4.3	4.3				4.3	4.3				4.3	4.3				8.0
9.0	4.3	4.3	4.3			4.3	4.3				4.3	4.3				4.3	4.3				4.3	4.3				9.0
10.0	4.3	4.3	4.1			4.3	4.3	4.3			4.3	4.3				4.3	4.3				4.3	4.3				10.0
11.0	4.3	4.3	3.9	3.2		4.3	4.3	4.3			4.3	4.3	4.3			4.3	4.3	4.3			4.3	4.3	4.3			11.0
12.0	4.3	4.3	3.7	3.1		4.3	4.3	4.3	3.3		4.3	4.3	4.3			4.3	4.3	4.3			4.3	4.3	4.3			12.0
14.0	4.1	3.8	3.4	2.9		4.3	4.3	4.0	3.2	2.4	4.3	4.3	4.2	3.2	2.4	4.3	4.3	4.2	3.2	2.4	4.3	4.3	4.3	3.3		14.0
16.0	3.6	3.4	3.1	2.7		4.3	4.3	3.7	3.0	2.4	4.3	4.3	3.9	3.1	2.4	4.3	4.3	3.9	3.1	2.4	4.3	4.3	4.0	3.1	2.4	16.0
18.0	3.2	3.1	2.9			4.3	4.2	3.5	2.9		4.3	4.3	3.7	3.0		4.3	4.3	3.7	3.0		4.3	4.3	3.8	3.0	2.3	18.0
20.0	2.9	2.9				4.3	3.9	3.3	2.8		4.3	4.2	3.5	2.9		4.3	4.2	3.5	2.9		4.3	4.3	3.6	2.9		20.0
22.0	2.6	2.7				4.0	3.6	3.1	2.7		4.3	3.9	3.3	2.8		4.3	3.9	3.3	2.8		4.3	4.2	3.4	2.8		22.0
24.0						3.7	3.4	3.0			4.1	3.7	3.1	2.7		4.1	3.7	3.1	2.7		4.3	3.9	3.3	2.8		24.0
26.0						3.4	3.2	2.9			3.8	3.4	3.0			3.8	3.4	3.0			4.1	3.7	3.1	2.7		26.0
28.0						3.1	3.0	2.8			3.5	3.3	2.9			3.5	3.3	2.9			3.8	3.5	3.0			28.0
30.0						2.9	2.8				3.2	3.1	2.8			3.2	3.1	2.8			3.6	3.3	2.9			30.0
32.0						2.7	2.7				3.0	2.9	2.7			3.0	2.9	2.7			3.3	3.1	2.8			32.0
34.0						2.5					2.8	2.8				2.8	2.8				3.1	3.0	2.7			34.0
36.0											2.4	2.6				2.7	2.7				2.6	2.8				36.0
38.0											1.9					2.5					2.0	2.2				38.0
40.0																					1.6	1.7				40.0
44.0																										44.0
48.0																										48.0
52.0																										52.0
56.0																										56.0
60.0																										60.0
64.0																										64.0
68.0																										68.0
72.0																										72.0
1	0	0	0	0		46	46	46	46	46	92	92	92	92	92	46	46	46	46	46	92	92	92	92	92	1
2	0	0	0	0		46	46	46	46	46	46	46	46	46	46	46	46	46	46	46	46	46	46	46	46	2
3	0	0	0	0		46	46	46	46	46	46	46	46	46	46	46	46	46	46	46	46	46	46	46	46	3
4	0	0	0	0		0	0	0	0	0	0	0	0	0	0	46	46	46	46	46	46	46	46	46	46	4
5	0	0	0	0		0	0	0	0	0	0	0	0	0	0	0	0	0	0	0	0	0	0	0	0	5
ID	1	1	1	1		66	66	66	66	66	67	67	67	67	67	54	54	54	54	54	55	55	55	55	55	ID
[DEG]	0~83	0~85	0~85	0~85		25~83	27~85	47~85	58~85	76~85	17~83	27~85	46~85	59~85	75~85	17~83	27~85	45~85	59~85	75~85	31~83	33~85	44~85	60~85	74~85	[DEG]
	1	1	1	1		1	1	1	1	1	1	1	1	1	1	1	1	1	1	1	1	1	1	1	1	
	8.7t	8.7t	8.7t	8.7t		8.7t	8.7t	8.7t	8.7t	8.7t	8.7t	8.7t	8.7t	8.7t	8.7t	8.7t	8.7t	8.7t	8.7t	8.7t	8.7t	8.7t	8.7t	8.7t	8.7t	

m	34.4	34.4	34.4	34.4	34.4	38.7	38.7	38.7	38.7	38.7	43.0	43.0	43.0	43.0	43.0	43.0	43.0	43.0	43.0	43.0	47.4	47.4	47.4	47.4	47.4	m
°	5	15	30	45	60	5	15	30	45	60	5	15	30	45	60	5	15	30	45	60	5	15	30	45	60	°
3.0																										3.0
3.5																										3.5
4.0																										4.0
4.5																										4.5
5.0																										5.0
6.0																										6.0
7.0	4.3																									7.0
8.0	4.3	4.3				4.3																				8.0
9.0	4.3	4.3				4.3	4.3				4.3					4.3										9.0
10.0	4.3	4.3				4.3	4.3				4.3	4.3				4.3	4.3				4.3					10.0
11.0	4.3	4.3	4.3			4.3	4.3				4.3	4.3				4.3	4.3				4.3	4.3				11.0
12.0	4.3	4.3	4.3			4.3	4.3	4.3			4.3	4.3				4.3	4.3				4.3	4.3				12.0
14.0	4.3	4.3	4.2	3.3		4.3	4.3	4.2	3.3		4.3	4.3	4.2			4.3	4.3	4.1			4.3	4.3	4.2			14.0
16.0	4.3	4.3	4.0	3.1	2.4	4.3	4.3	4.0	3.2	2.4	4.3	4.3	4.0	3.2	2.4	4.3	4.3	3.9	3.2		4.3	4.3	4.0	3.3		16.0
18.0	4.3	4.3	3.8	3.0	2.3	4.3	4.3	3.9	3.1	2.3	4.3	4.3	3.9	3.1	2.4	4.3	4.3	3.7	3.1	2.4	4.3	4.3	3.8	3.2	2.4	18.0
20.0	4.3	4.3	3.6	2.9		4.3	4.3	3.7	3.0	2.3	4.3	4.3	3.7	3.0	2.3	4.3	4.3	3.6	3.0	2.3	4.3	4.3	3.7	3.1	2.3	20.0
22.0	4.3	4.2	3.4	2.8		4.3	4.3	3.6	2.9		4.3	4.3	3.6	2.9		4.3	4.2	3.5	2.9		4.3	4.3	3.6	3.0	2.3	22.0
24.0	4.3	3.9	3.3	2.8		4.3	4.1	3.4	2.8		4.3	4.2	3.5	2.9		4.3	4.0	3.4	2.9		4.3	4.2	3.4	2.9		24.0
26.0	4.1	3.7	3.1	2.7		4.3	3.9	3.3	2.7		4.3	4.0	3.4	2.8		4.3	3.8	3.3	2.8		4.3	4.0	3.4	2.8		26.0
28.0	3.8	3.5	3.0			4.2	3.7	3.1	2.7		4.3	3.8	3.3	2.7		4.2	3.7	3.2	2.7		4.3	3.8	3.3	2.8		28.0
30.0	3.6	3.3	2.9			3.9	3.5	3.0			4.2	3.7	3.1	2.7		4.0	3.5	3.1	2.7		4.3	3.7	3.2	2.7		30.0
32.0	3.3	3.1	2.8			3.7	3.4	2.9			3.9	3.5	3.0			3.9	3.4	3.0			3.9	3.5	3.1	2.7		32.0
34.0	3.1	3.0	2.7			3.4	3.2	2.8			3.3	3.4	2.9			3.7	3.3	2.9			3.3	3.4	3.0	2.6		34.0
36.0	3.0	2.9				2.9	3.1	2.8			2.7	2.9	2.9			3.5	3.2	2.8			2.7	3.0	2.9			36.0
38.0	2.8	2.8				2.3	2.5	2.7			2.2	2.4	2.6			3.3	3.1	2.8			2.2	2.4	2.7			38.0
40.0	2.4	2.5				1.8	2.0				1.7	1.9	2.1			2.9	3.0	2.7			1.7	1.9	2.2			40.0
44.0																2.2	2.3						1.2			44.0
48.0																1.5	1.5									48.0
52.0																										52.0
56.0																										56.0
60.0																										60.0
64.0																										64.0
68.0																										68.0
72.0																										72.0
1	46	46	46	46	46	92	92	92	92	92	92	92	92	92	92	0	0	0	0	0	92	92	92	92	92	1
2	46	46	46	46	46	46	46	46	46	46	92	92	92	92	92	46	46	46	46	46	92	92	92	92	92	2
3	46	46	46	46	46	46	46	46	46	46	46	46	46	46	46	92	92	92	92	92	92	92	92	92	92	3
4	46	46	46	46	46	46	46	46	46	46	46	46	46	46	46	92	92	92	92	92	46	46	46	46	46	4
5	46	46	46	46	46	46	46	46	46	46	46	46	46	46	46	92	92	92	92	92	46	46	46	46	46	5
ID	49	49	49	49	49	50	50	50	50	50	42	42	42	42	42	21	21	21	21	21	38	38	38	38	38	ID
[DEG]	18~83	33~85	44~85	60~85	74~85	39~83	41~85	43~85	58~85	76~85	45~83	47~85	49~85	59~85	75~85	32~83	33~85	43~85	59~85	75~85	50~83	52~85	48~85	60~85	75~85	[DEG]
	1	1	1	1	1	1	1	1	1	1	1	1	1	1	1	1	1	1	1	1	1	1	1	1	1	
	8.7t	8.7t	8.7t	8.7t	8.7t	8.7t	8.7t	8.7t	8.7t	8.7t	8.7t	8.7t	8.7t	8.7t	8.7t	8.7t	8.7t	8.7t	8.7t	8.7t	8.7t	8.7t	8.7t	8.7t	8.7t	

フルオートラフィングジブ

FLJ	1.6m + 12.4m	28.9 t	8.0m x 6.2m	360 °	JPN

m	47.4	47.4	47.4	47.4	47.4	51.7	51.7	51.7	51.7	51.7	51.7	51.7	51.7	51.7	51.7	56.0	56.0	56.0	56.0	56.0	60.0	60.0	60.0	60.0	60.0	m
°	5	15	30	45	60	5	15	30	45	60	5	15	30	45	60	5	15	30	45	60	5	15	30	45	60	°
m 3.0																										3.0
3.5																										3.5
4.0																										4.0
4.5																										4.5
5.0																										5.0
6.0																										6.0
7.0																										7.0
8.0																										8.0
9.0																										9.0
10.0	4.3																									10.0
11.0	4.3	4.3				4.3					4.3															11.0
12.0	4.3	4.3				4.3	4.3				4.3	4.3				4.3										12.0
14.0	4.3	4.3	4.1			4.3	4.3				4.3	4.3				4.3	4.3				3.3	3.3				14.0
16.0	4.3	4.3	4.0	3.3		4.3	4.3	3.9			4.3	4.3	3.9			4.3	4.3	3.8			3.3	3.3				16.0
18.0	4.3	4.3	3.8	3.2	2.4	4.3	4.3	3.8	3.2	2.4	4.3	4.3	3.7	3.2	2.4	4.3	4.3	3.7	3.2		3.3	3.3	3.3			18.0
20.0	4.3	4.3	3.7	3.1	2.3	4.3	4.3	3.7	3.1	2.3	4.3	4.3	3.6	3.1	2.3	4.3	4.3	3.6	3.1	2.3	3.3	3.3	3.3	3.1	2.3	20.0
22.0	4.3	4.3	3.5	3.0	2.3	4.3	4.3	3.5	3.0	2.3	4.3	4.2	3.5	3.0	2.3	4.3	4.2	3.5	3.1	2.3	3.3	3.3	3.3	3.0	2.3	22.0
24.0	4.3	4.1	3.4	2.9		4.3	4.1	3.4	2.9		4.3	4.0	3.4	2.9		4.3	4.0	3.4	3.0	2.3	3.3	3.3	3.3	3.0	2.3	24.0
26.0	4.3	3.9	3.3	2.8		4.3	3.9	3.3	2.9		4.3	3.9	3.2	2.9		4.3	3.9	3.2	2.9		3.3	3.3	3.2	2.9		26.0
28.0	4.3	3.8	3.2	2.8		4.3	3.8	3.2	2.8		4.3	3.7	3.2	2.8		4.3	3.7	3.2	2.9		3.3	3.3	3.1	2.8		28.0
30.0	4.2	3.6	3.1	2.7		4.2	3.7	3.1	2.8		4.1	3.6	3.1	2.8		4.1	3.6	3.1	2.8		3.3	3.3	3.0	2.8		30.0
32.0	4.0	3.5	3.0	2.7		4.0	3.5	3.1	2.7		4.0	3.5	3.0	2.7		4.0	3.5	3.0	2.7		3.3	3.3	3.0	2.7		32.0
34.0	3.8	3.4	3.0	2.6		3.4	3.4	3.0	2.7		3.8	3.3	2.9	2.7		3.5	3.4	2.9	2.7		3.3	3.3	2.9	2.7		34.0
36.0	3.2	3.3	2.9			2.8	3.1	2.9	2.6		3.3	3.2	2.9	2.6		3.0	3.2	2.9	2.7		2.9	3.2	2.8	2.6		36.0
38.0	2.7	2.9	2.8			2.3	2.5	2.8			2.8	3.0	2.8			2.5	2.7	2.8	2.6		2.4	2.7	2.8	2.6		38.0
40.0	2.2	2.4	2.6			1.8	2.0	2.3			2.4	2.6	2.7			2.0	2.2	2.5			1.9	2.2	2.5	2.6		40.0
44.0	1.4	1.5	1.7					1.4			1.5	1.7	1.9				1.3	1.6					1.5			44.0
48.0																										48.0
52.0																										52.0
56.0																										56.0
60.0																										60.0
64.0																										64.0
68.0																										68.0
72.0																										72.0
% 1	46	46	46	46	46	92	92	92	92	92	46	46	46	46	46	92	92	92	92	92	100	100	100	100	100	1
2	92	92	92	92	92	92	92	92	92	92	92	92	92	92	92	92	92	92	92	92	100	100	100	100	100	2
3	92	92	92	92	92	92	92	92	92	92	92	92	92	92	92	92	92	92	92	92	100	100	100	100	100	3
4	92	92	92	92	92	92	92	92	92	92	92	92	92	92	92	92	92	92	92	92	100	100	100	100	100	4
5	46	46	46	46	46	46	46	46	46	46	92	92	92	92	92	92	92	92	92	92	100	100	100	100	100	5
ID	31	31	31	31	31	32	32	32	32	32	23	23	23	23	23	24	24	24	24	24	16	16	16	16	16	ID
[DEG]	45~83	46~85	48~85	60~85	75~85	54~83	56~85	53~85	59~85	74~85	49~83	51~85	47~85	59~85	74~85	58~83	55~85	57~85	57~85	74~85	61~83	62~85	60~85	61~85	74~85	[DEG]
	1	1	1	1	1	1	1	1	1	1	1	1	1	1	1	1	1	1	1	1	1	1	1	1	1	
	8.7t	8.7t	8.7t	8.7t	8.7t	8.7t	8.7t	8.7t	8.7t	8.7t	8.7t	8.7t	8.7t	8.7t	8.7t	8.7t	8.7t	8.7t	8.7t	8.7t	8.7t	8.7t	8.7t	8.7t	8.7t	

FLJ	1.6m + 17.4m	28.9 t	8.0m x 6.2m	360 °	JPN

m	12.8	12.8	12.8	12.8	12.8	25.8	25.8	25.8	25.8	25.8	30.1	30.1	30.1	30.1	30.1	30.1	30.1	30.1	30.1	30.1	34.4	34.4	34.4	34.4	34.4	m
°	5	15	30	45	60	5	15	30	45	60	5	15	30	45	60	5	15	30	45	60	5	15	30	45	60	°
m 3.0																										3.0
3.5																										3.5
4.0																										4.0
4.5																										4.5
5.0	3.3																									5.0
6.0	3.3																									6.0
7.0	3.3																									7.0
8.0	3.3	3.3				3.3					3.3					3.3										8.0
9.0	3.3	3.3				3.3	3.3				3.3					3.3					3.3					9.0
10.0	3.3	3.3				3.3	3.3				3.3	3.3				3.3	3.3				3.3					10.0
11.0	3.3	3.3				3.3	3.3				3.3	3.3				3.3	3.3				3.3	3.3				11.0
12.0	3.3	3.2	2.6			3.3	3.3				3.3	3.3				3.3	3.3				3.3	3.3				12.0
14.0	3.3	2.9	2.4			3.3	3.2	2.6			3.3	3.3	2.7			3.3	3.2	2.6			3.3	3.3				14.0
16.0	2.9	2.6	2.2	1.8		3.3	3.0	2.5			3.3	3.1	2.5			3.3	3.0	2.5			3.3	3.1	2.5			16.0
18.0	2.5	2.3	2.0	1.7		3.3	2.8	2.3	1.9		3.3	2.9	2.4	1.9		3.3	2.9	2.4	1.9		3.3	2.9	2.4	1.9		18.0
20.0	2.3	2.1	1.8	1.6		3.1	2.6	2.2	1.8		3.2	2.7	2.2	1.8	1.5	3.2	2.7	2.2	1.8	1.5	3.3	2.8	2.3	1.8	1.5	20.0
22.0	2.0	1.9	1.7			2.9	2.5	2.0	1.7		3.0	2.6	2.1	1.7	1.5	3.0	2.6	2.1	1.7	1.5	3.1	2.6	2.2	1.8	1.5	22.0
24.0	1.8	1.8	1.6			2.7	2.4	1.9	1.6		2.8	2.5	2.0	1.7		2.8	2.4	2.0	1.7		2.9	2.5	2.1	1.7		24.0
26.0	1.7	1.6				2.5	2.2	1.8	1.6		2.7	2.3	1.9	1.6		2.6	2.3	1.9	1.6		2.7	2.4	2.0	1.6		26.0
28.0	1.5					2.3	2.1	1.7	1.5		2.5	2.2	1.8	1.6		2.5	2.2	1.8	1.6		2.6	2.3	1.9	1.6		28.0
30.0						2.1	1.9	1.7			2.4	2.1	1.7	1.5		2.4	2.1	1.7	1.5		2.5	2.2	1.8	1.5		30.0
32.0						2.0	1.8	1.6			2.2	2.0	1.7			2.2	2.0	1.7			2.4	2.1	1.7	1.5		32.0
34.0						1.8	1.7				2.0	1.9	1.6			2.0	1.9	1.6			2.3	2.0	1.7			34.0
36.0						1.7	1.7				1.9	1.8	1.6			1.9	1.8	1.6			2.1	1.9	1.6			36.0
38.0						1.6	1.6				1.8	1.7				1.8	1.7				2.0	1.8	1.6			38.0
40.0						1.5					1.7	1.6				1.7	1.6				1.9	1.7				40.0
44.0											1.3					1.5					1.4	1.6				44.0
48.0																										48.0
52.0																										52.0
56.0																										56.0
60.0																										60.0
64.0																										64.0
68.0																										68.0
72.0																										72.0
% 1	0	0	0	0		46	46	46	46		92	92	92	92	92	46	46	46	46	46	92	92	92	92	92	1
2	0	0	0	0		46	46	46	46		46	46	46	46	46	46	46	46	46	46	46	46	46	46	46	2
3	0	0	0	0		46	46	46	46		46	46	46	46	46	46	46	46	46	46	46	46	46	46	46	3
4	0	0	0	0		0	0	0	0		0	0	0	0	0	46	46	46	46	46	46	46	46	46	46	4
5	0	0	0	0		0	0	0	0		0	0	0	0	0	0	0	0	0	0	0	0	0	0	0	5
ID	1	1	1	1		66	66	66	66		67	67	67	67	67	54	54	54	54	54	55	55	55	55	55	ID
[DEG]	0~83	0~85	0~85	0~85		20~83	30~85	44~85	60~85		21~83	35~85	43~85	57~85	73~85	21~83	35~85	43~85	57~85	73~85	33~83	35~85	46~85	58~85	75~85	[DEG]
	1	1	1	1		1	1	1	1		1	1	1	1	1	1	1	1	1	1	1	1	1	1	1	
	8.7t	8.7t	8.7t	8.7t		8.7t	8.7t	8.7t	8.7t		8.7t	8.7t	8.7t	8.7t	8.7t	8.7t	8.7t	8.7t	8.7t	8.7t	8.7t	8.7t	8.7t	8.7t	8.7t	

FLJ	1.6m + 17.4m	28.9 t	8.0m x 6.2m	360 °	JPN

m	34.4	34.4	34.4	34.4	34.4	38.7	38.7	38.7	38.7	38.7	43.0	43.0	43.0	43.0	43.0	43.0	43.0	43.0	43.0	43.0	47.4	47.4	47.4	47.4	47.4	m
°	5	15	30	45	60	5	15	30	45	60	5	15	30	45	60	5	15	30	45	60	5	15	30	45	60	°
3.0																										3.0
3.5																										3.5
4.0																										4.0
4.5																										4.5
5.0																										5.0
6.0																										6.0
7.0																										7.0
8.0																										8.0
9.0	3.3																									9.0
10.0	3.3					3.3																				10.0
11.0	3.3	3.3				3.3					3.3					2.9										11.0
12.0	3.3	3.3				3.3	3.3				3.3	3.3				2.9					3.2					12.0
14.0	3.3	3.2				3.3	3.3				3.3	3.2				2.9	2.9				3.2	3.2				14.0
16.0	3.3	3.0	2.5			3.3	3.1	2.5			3.3	3.1				2.9	2.9				3.2	3.1				16.0
18.0	3.3	2.9	2.4	1.9		3.3	2.9	2.4			3.3	2.9	2.4			2.9	2.8	2.3			3.2	2.9	2.4			18.0
20.0	3.2	2.7	2.3	1.8	1.5	3.3	2.8	2.3	1.9		3.3	2.8	2.3	1.9		2.9	2.7	2.2	1.9		3.2	2.8	2.3			20.0
22.0	3.0	2.6	2.2	1.8	1.5	3.1	2.6	2.2	1.8	1.5	3.1	2.7	2.2	1.8	1.5	2.9	2.6	2.2	1.8	1.5	3.1	2.7	2.2	1.8		22.0
24.0	2.9	2.5	2.1	1.7		2.9	2.5	2.1	1.7	1.5	3.0	2.5	2.1	1.8	1.5	2.9	2.5	2.1	1.8	1.5	3.0	2.5	2.1	1.8	1.5	24.0
26.0	2.7	2.4	2.0	1.6		2.8	2.4	2.1	1.7		2.8	2.4	2.1	1.7		2.7	2.4	2.0	1.7		2.9	2.4	2.1	1.7	1.4	26.0
28.0	2.6	2.3	1.9	1.6		2.7	2.3	2.0	1.6		2.7	2.3	2.0	1.6		2.6	2.3	2.0	1.6		2.7	2.4	2.0	1.7		28.0
30.0	2.5	2.2	1.8	1.5		2.5	2.2	1.9	1.6		2.6	2.3	1.9	1.6		2.5	2.2	1.9	1.6		2.6	2.3	1.9	1.6		30.0
32.0	2.4	2.1	1.7	1.5		2.4	2.1	1.8	1.5		2.5	2.2	1.9	1.6		2.4	2.1	1.8	1.6		2.5	2.2	1.9	1.6		32.0
34.0	2.3	2.0	1.7			2.3	2.1	1.7	1.5		2.4	2.1	1.8	1.5		2.3	2.0	1.8	1.5		2.4	2.1	1.8	1.6		34.0
36.0	2.1	1.9	1.6			2.2	2.0	1.7			2.3	2.0	1.7	1.5		2.2	2.0	1.7	1.5		2.3	2.0	1.8	1.5		36.0
38.0	2.0	1.8	1.6			2.2	1.9	1.6			2.2	2.0	1.7			2.2	1.9	1.7			2.2	2.0	1.7	1.5		38.0
40.0	1.9	1.7				2.0	1.9	1.6			2.1	1.9	1.6			2.1	1.9	1.6			2.2	1.9	1.7			40.0
44.0	1.7	1.6				1.6	1.7				1.4	1.7	1.6			2.0	1.8	1.6			1.4	1.7	1.6			44.0
48.0	1.5															1.8	1.7						1.2			48.0
52.0																1.4	1.5									52.0
56.0																										56.0
60.0																										60.0
64.0																										64.0
68.0																										68.0
72.0																										72.0
1	46	46	46	46	46	92	92	92	92	92	92	92	92	92	92	0	0	0	0	0	92	92	92	92	92	1
2	46	46	46	46	46	46	46	46	46	46	92	92	92	92	92	46	46	46	46	46	92	92	92	92	92	2
3	46	46	46	46	46	46	46	46	46	46	46	46	46	46	46	92	92	92	92	92	92	92	92	92	92	3
4	46	46	46	46	46	46	46	46	46	46	46	46	46	46	46	92	92	92	92	92	46	46	46	46	46	4
5	46	46	46	46	46	46	46	46	46	46	46	46	46	46	46	92	92	92	92	92	46	46	46	46	46	5
ID	49	49	49	49	49	50	50	50	50	50	42	42	42	42	42	21	21	21	21	21	38	38	38	38	38	ID
[DEG]	22~83	35~85	46~85	58~85	75~85	40~83	42~85	44~85	59~85	74~85	45~83	48~85	44~85	57~85	74~85	33~83	35~85	44~85	58~85	74~85	50~83	52~85	49~85	61~85	73~85	[DEG]
	1	1	1	1	1	1	1	1	1	1	1	1	1	1	1	1	1	1	1	1	1	1	1	1	1	
	8.7t	8.7t	8.7t	8.7t	8.7t	8.7t	8.7t	8.7t	8.7t	8.7t	8.7t	8.7t	8.7t	8.7t	8.7t	8.7t	8.7t	8.7t	8.7t	8.7t	8.7t	8.7t	8.7t	8.7t	8.7t	

m	47.4	47.4	47.4	47.4	47.4	51.7	51.7	51.7	51.7	51.7	51.7	51.7	51.7	51.7	51.7	56.0	56.0	56.0	56.0	56.0	60.0	60.0	60.0	60.0	60.0	m
°	5	15	30	45	60	5	15	30	45	60	5	15	30	45	60	5	15	30	45	60	5	15	30	45	60	°
3.0																										3.0
3.5																										3.5
4.0																										4.0
4.5																										4.5
5.0																										5.0
6.0																										6.0
7.0																										7.0
8.0																										8.0
9.0																										9.0
10.0																										10.0
11.0																										11.0
12.0	3.1																									12.0
14.0	3.1	3.1				3.2	3.1				3.2	3.0				2.9										14.0
16.0	3.1	3.0				3.2	3.0				3.1	2.9				2.9	2.9				2.8	2.7				16.0
18.0	3.1	2.9	2.4			3.2	2.9				3.1	2.8				2.9	2.8				2.8	2.6				18.0
20.0	3.1	2.7	2.3			3.1	2.7	2.3			3.0	2.7	2.2			2.9	2.7	2.2			2.8	2.6				20.0
22.0	3.1	2.6	2.2	1.8		3.1	2.6	2.2	1.8		2.9	2.6	2.2	1.8		2.9	2.6	2.2			2.7	2.5	2.1			22.0
24.0	2.9	2.5	2.1	1.8	1.5	2.9	2.5	2.1	1.8	1.5	2.9	2.5	2.1	1.8	1.5	2.8	2.5	2.1	1.8		2.7	2.5	2.1	1.8		24.0
26.0	2.8	2.4	2.0	1.7	1.4	2.8	2.4	2.1	1.7	1.4	2.8	2.4	2.0	1.7	1.4	2.8	2.4	2.0	1.8	1.4	2.6	2.4	2.0	1.8	1.4	26.0
28.0	2.7	2.3	2.0	1.7		2.7	2.3	2.0	1.7	1.4	2.7	2.3	2.0	1.7	1.4	2.7	2.3	2.0	1.7	1.4	2.6	2.3	2.0	1.7	1.4	28.0
30.0	2.6	2.2	1.9	1.6		2.6	2.3	1.9	1.6		2.6	2.2	1.9	1.6		2.6	2.2	1.9	1.7		2.5	2.2	1.9	1.7	1.4	30.0
32.0	2.5	2.2	1.9	1.6		2.5	2.2	1.9	1.6		2.5	2.2	1.9	1.6		2.5	2.2	1.9	1.6		2.5	2.2	1.8	1.6		32.0
34.0	2.4	2.1	1.8	1.6		2.4	2.1	1.8	1.6		2.4	2.1	1.8	1.6		2.4	2.1	1.8	1.6		2.4	2.1	1.8	1.6		34.0
36.0	2.3	2.0	1.8	1.5		2.3	2.0	1.8	1.5		2.3	2.0	1.7	1.5		2.3	2.0	1.8	1.6		2.3	2.0	1.7	1.6		36.0
38.0	2.2	2.0	1.7	1.5		2.3	2.0	1.7	1.5		2.2	2.0	1.7	1.5		2.2	2.0	1.7	1.5		2.2	2.0	1.7	1.5		38.0
40.0	2.1	1.9	1.7			2.2	1.9	1.7	1.5		2.1	1.9	1.7	1.5		2.2	1.9	1.7	1.5		2.2	1.9	1.7	1.5		40.0
44.0	1.9	1.8	1.6			1.5	1.8	1.6			2.0	1.8	1.6			1.6	1.8	1.6			1.5	1.8	1.6	1.5		44.0
48.0	1.2	1.4	1.5					1.3			1.3	1.5	1.5					1.5					1.4			48.0
52.0													1.1													52.0
56.0																										56.0
60.0																										60.0
64.0																										64.0
68.0																										68.0
72.0																										72.0
1	46	46	46	46	46	92	92	92	92	92	46	46	46	46	46	92	92	92	92	92	100	100	100	100	100	1
2	92	92	92	92	92	92	92	92	92	92	92	92	92	92	92	92	92	92	92	92	100	100	100	100	100	2
3	92	92	92	92	92	92	92	92	92	92	92	92	92	92	92	92	92	92	92	92	100	100	100	100	100	3
4	92	92	92	92	92	92	92	92	92	92	92	92	92	92	92	92	92	92	92	92	100	100	100	100	100	4
5	46	46	46	46	46	46	46	46	46	46	92	92	92	92	92	92	92	92	92	92	100	100	100	100	100	5
ID	31	31	31	31	31	32	32	32	32	32	23	23	23	23	23	24	24	24	24	24	16	16	16	16	16	ID
[DEG]	45~83	47~85	49~85	61~85	73~85	54~83	56~85	54~85	60~85	73~85	50~83	52~85	48~85	60~85	73~85	57~83	59~85	57~85	58~85	73~85	60~83	62~85	60~85	62~85	73~85	[DEG]
	1	1	1	1	1	1	1	1	1	1	1	1	1	1	1	1	1	1	1	1	1	1	1	1	1	
	8.7t	8.7t	8.7t	8.7t	8.7t	8.7t	8.7t	8.7t	8.7t	8.7t	8.7t	8.7t	8.7t	8.7t	8.7t	8.7t	8.7t	8.7t	8.7t	8.7t	8.7t	8.7t	8.7t	8.7t	8.7t	

フルオートラフィングジブ

FLJ	1.6m + 7.4m	28.9 t	8.0m x 5.0m	360 °	JPN

m	12.8	12.8	12.8	12.8	12.8	25.8	25.8	25.8	25.8	25.8	30.1	30.1	30.1	30.1	30.1	30.1	30.1	30.1	30.1	30.1	34.4	34.4	34.4	34.4	34.4	m
°	5	15	30	45	60	5	15	30	45	60	5	15	30	45	60	5	15	30	45	60	5	15	30	45	60	°
3.0	7.3																									3.0
3.5	7.3	7.3																								3.5
4.0	7.3	7.3				7.3																				4.0
4.5	7.3	7.3				7.3																				4.5
5.0	7.3	7.3				7.3	7.3				7.3					7.3										5.0
6.0	7.3	7.3	7.3			7.3	7.3				7.3	7.3				7.3	7.3				7.3	7.3				6.0
7.0	7.3	7.3	7.3	5.9		7.3	7.3	7.3			7.3	7.3	7.3			7.3	7.3	7.3			7.3	7.3				7.0
8.0	7.3	7.3	7.0	5.7		7.3	7.3	7.3	6.2		7.3	7.3	7.3			7.3	7.3	7.3			7.3	7.3	7.3			8.0
9.0	7.3	7.3	6.6	5.5		7.3	7.3	7.3	6.0	4.5	7.3	7.3	7.3	6.1		7.3	7.3	7.3	6.1		7.3	7.3	7.3	6.2		9.0
10.0	7.3	7.3	6.3	5.4		7.3	7.3	7.3	5.9	4.5	7.3	7.3	7.3	6.0	4.5	7.3	7.3	7.3	6.0	4.5	7.3	7.3	7.3	6.1	4.5	10.0
11.0	7.3	7.0	6.1	5.2		7.3	7.3	7.3	5.8	4.4	7.3	7.3	7.3	5.9	4.5	7.3	7.3	7.3	5.9	4.5	7.3	7.3	7.3	6.0	4.5	11.0
12.0	7.1	6.5	5.8			7.3	7.3	7.0	5.6		7.3	7.3	7.3	5.8	4.4	7.3	7.3	7.3	5.8	4.4	7.3	7.3	7.3	5.9	4.4	12.0
14.0	6.1	5.9	5.4			7.3	7.3	6.6	5.4		7.3	7.3	6.9	5.6		7.3	7.3	6.9	5.6		7.3	7.3	7.2	5.7	4.4	14.0
16.0	5.4	5.3				7.3	7.3	6.2	5.2		7.3	7.3	6.5	5.4		7.3	7.3	6.5	5.4		7.3	7.3	6.8	5.5		16.0
18.0	4.9					7.3	6.9	5.9	5.1		7.3	7.3	6.2	5.2		7.3	7.3	6.2	5.2		7.3	7.3	6.5	5.3		18.0
20.0						7.1	6.4	5.7			7.1	7.0	5.9	5.1		7.3	7.0	5.9	5.1		7.3	7.3	6.2	5.2		20.0
22.0						6.2	6.0	5.4			5.6	5.9	5.7			6.5	6.6	5.7			5.9	6.2	6.0	5.1		22.0
24.0						5.0	5.2	5.3			4.5	4.7	5.0			5.3	5.5	5.5			4.8	5.0	5.3			24.0
26.0						4.0	4.2				3.5	3.7	3.9			4.3	4.5	4.7			3.8	4.0	4.2			26.0
28.0						3.2	3.3				2.7	2.8				3.4	3.6				2.9	3.1	3.3			28.0
30.0						2.5					1.9	2.1				2.7	2.8				2.2	2.4	2.6			30.0
32.0												1.4				2.1	2.2				1.5	1.7				32.0
34.0																1.5										34.0
36.0																										36.0
38.0																										38.0
40.0																										40.0
44.0																										44.0
48.0																										48.0
52.0																										52.0
56.0																										56.0
60.0																										60.0
64.0																										64.0
68.0																										68.0
72.0																										72.0
1	0	0	0	0		46	46	46	46	46	92	92	92	92	92	46	46	46	46	46	92	92	92	92	92	1
2	0	0	0	0		46	46	46	46	46	46	46	46	46	46	46	46	46	46	46	46	46	46	46	46	2
3	0	0	0	0		46	46	46	46	46	46	46	46	46	46	46	46	46	46	46	46	46	46	46	46	3
4	0	0	0	0		0	0	0	0	0	0	0	0	0	0	46	46	46	46	46	46	46	46	46	46	4
5	0	0	0	0		0	0	0	0	0	0	0	0	0	0	0	0	0	0	0	0	0	0	0	0	5
ID	1	1	1	1		66	66	66	66	66	67	67	67	67	67	54	54	54	54	54	55	55	55	55	55	ID
[DEG]	0~83	0~85	0~85	0~85		22~83	31~85	45~85	61~85	74~85	35~83	31~85	43~85	62~85	77~85	22~83	31~85	43~85	61~85	77~85	39~83	41~85	46~85	59~85	76~85	[DEG]
	1	1	1	1		1	1	1	1	1	1	1	1	1	1	1	1	1	1	1	1	1	1	1	1	
	8.7t	8.7t	8.7t	8.7t		8.7t	8.7t	8.7t	8.7t	8.7t	8.7t	8.7t	8.7t	8.7t	8.7t	8.7t	8.7t	8.7t	8.7t	8.7t	8.7t	8.7t	8.7t	8.7t	8.7t	

m	34.4	34.4	34.4	34.4	34.4	38.7	38.7	38.7	38.7	38.7	43.0	43.0	43.0	43.0	43.0	43.0	43.0	43.0	43.0	43.0	47.4	47.4	47.4	47.4	47.4	m
°	5	15	30	45	60	5	15	30	45	60	5	15	30	45	60	5	15	30	45	60	5	15	30	45	60	°
3.0																										3.0
3.5																										3.5
4.0																										4.0
4.5																										4.5
5.0																										5.0
6.0	7.3	7.3																								6.0
7.0	7.3	7.3				7.3	7.3																			7.0
8.0	7.3	7.3	7.3			7.3	7.3				7.3	7.3				7.3	7.3					7.3				8.0
9.0	7.3	7.3	7.3	6.2		7.3	7.3	7.3			7.3	7.3	7.3			7.3	7.3				7.3	7.3				9.0
10.0	7.3	7.3	7.3	6.1	4.5	7.3	7.3	7.3	6.2		7.3	7.3	7.3			7.3	7.3	7.3			7.3	7.3	7.3			10.0
11.0	7.3	7.3	7.3	6.0	4.5	7.3	7.3	7.3	6.1	4.5	7.3	7.3	7.3	6.1	4.5	7.3	7.3	7.3	6.1		7.3	7.3	7.3			11.0
12.0	7.3	7.3	7.3	5.9	4.4	7.3	7.3	7.3	6.0	4.5	7.3	7.3	7.3	6.0	4.5	7.3	7.3	7.3	6.0	4.5	7.3	7.3	7.3	6.1	4.5	12.0
14.0	7.3	7.3	7.2	5.7	4.4	7.3	7.3	7.3	5.8	4.4	7.3	7.3	7.3	5.8	4.4	7.3	7.3	7.3	5.8	4.4	7.3	7.3	7.3	5.9	4.4	14.0
16.0	7.3	7.3	6.8	5.5		7.3	7.3	7.0	5.6		7.3	7.3	7.3	5.7	4.4	7.3	7.3	7.3	5.7	4.4	7.3	7.3	7.3	5.8	4.4	16.0
18.0	7.3	7.3	6.5	5.3		7.3	7.3	6.7	5.4		7.3	7.3	6.9	5.5		7.3	7.3	6.9	5.5		7.3	7.3	7.1	5.6		18.0
20.0	7.3	7.3	6.2	5.2		7.3	7.3	6.4	5.3		7.3	7.3	6.7	5.4		7.3	7.3	6.7	5.4		7.3	7.3	6.9	5.5		20.0
22.0	6.8	7.1	6.0	5.1		6.3	6.6	6.2	5.2		6.2	6.5	6.4	5.3		7.3	7.3	6.4	5.3		6.2	6.5	6.6	5.4		22.0
24.0	5.6	5.8	5.7			5.1	5.4	5.7	5.1		5.0	5.3	5.6	5.2		6.4	6.6	6.2	5.2		5.0	5.3	5.7	5.3		24.0
26.0	4.6	4.8	5.0			4.1	4.3	4.6			4.0	4.2	4.5	4.7		5.4	5.6	5.8	5.1		4.1	4.3	4.6	4.8		26.0
28.0	3.8	3.9	4.1			3.3	3.5	3.7			3.2	3.4	3.6			4.5	4.7	4.9			3.2	3.4	3.7	3.9		28.0
30.0	3.1	3.2	3.3			2.6	2.7	2.9			2.5	2.6	2.9			3.8	3.9	4.1			2.5	2.7	2.9			30.0
32.0	2.4	2.6				1.9	2.1	2.3			1.8	2.0	2.2			3.2	3.3	3.4			1.9	2.0	2.3			32.0
34.0	1.9	2.0				1.3	1.5					1.4	1.6			2.6	2.7	2.9					1.6			34.0
36.0	1.4	1.4														2.1	2.2	2.3								36.0
38.0																1.7	1.8									38.0
40.0																1.3	1.4									40.0
44.0																										44.0
48.0																										48.0
52.0																										52.0
56.0																										56.0
60.0																										60.0
64.0																										64.0
68.0																										68.0
72.0																										72.0
1	46	46	46	46	46	92	92	92	92	92	92	92	92	92	92	0	0	0	0	0	92	92	92	92	92	1
2	46	46	46	46	46	46	46	46	46	46	92	92	92	92	92	46	46	46	46	46	92	92	92	92	92	2
3	46	46	46	46	46	46	46	46	46	46	46	46	46	46	46	92	92	92	92	92	92	92	92	92	92	3
4	46	46	46	46	46	46	46	46	46	46	46	46	46	46	46	92	92	92	92	92	46	46	46	46	46	4
5	46	46	46	46	46	46	46	46	46	46	46	46	46	46	46	92	92	92	92	92	46	46	46	46	46	5
ID	49	49	49	49	49	50	50	50	50	50	42	42	42	42	42	21	21	21	21	21	38	38	38	38	38	ID
[DEG]	29~83	30~85	46~85	59~85	75~85	42~83	44~85	45~85	60~85	75~85	51~83	49~85	50~85	61~85	74~85	38~83	39~85	44~85	61~85	74~85	55~83	57~85	55~85	59~85	74~85	[DEG]
	1	1	1	1	1	1	1	1	1	1	1	1	1	1	1	1	1	1	1	1	1	1	1	1	1	
	8.7t	8.7t	8.7t	8.7t	8.7t	8.7t	8.7t	8.7t	8.7t	8.7t	8.7t	8.7t	8.7t	8.7t	8.7t	8.7t	8.7t	8.7t	8.7t	8.7t	8.7t	8.7t	8.7t	8.7t	8.7t	

FLJ	1.6m + 7.4m	28.9 t	8.0m x 5.0m	360 °	JPN

m	47.4	47.4	47.4	47.4	47.4	51.7	51.7	51.7	51.7	51.7	51.7	51.7	51.7	51.7	51.7	56.0	56.0	56.0	56.0	56.0	60.0	60.0	60.0	60.0	60.0	m
°	5	15	30	45	60	5	15	30	45	60	5	15	30	45	60	5	15	30	45	60	5	15	30	45	60	°
3.0																										3.0
3.5																										3.5
4.0																										4.0
4.5																										4.5
5.0																										5.0
6.0																										6.0
7.0																										7.0
8.0		7.3																								8.0
9.0	7.3	7.3					7.3					6.4														9.0
10.0	7.3	7.3	7.3			7.3	7.3				6.4	6.4					6.3									10.0
11.0	7.3	7.3	7.3			7.3	7.3	7.3			6.4	6.4	6.4			6.3	6.3					5.3				11.0
12.0	7.3	7.3	7.3	6.1	4.5	7.3	7.3	7.3			6.4	6.4	6.4			6.3	6.3	6.3			5.3	5.3				12.0
14.0	7.3	7.3	7.3	5.9	4.4	7.3	7.3	7.3	6.0	4.5	6.4	6.4	6.4	6.0	4.5	6.3	6.3	6.3	6.0	4.5	5.3	5.3	5.3			14.0
16.0	7.3	7.3	7.3	5.8	4.4	7.3	7.3	7.3	5.8	4.4	6.4	6.4	6.4	5.8	4.4	6.3	6.3	6.3	5.9	4.4	5.3	5.3	5.3	5.3	4.4	16.0
18.0	7.3	7.3	7.1	5.6		7.3	7.3	7.3	5.7	4.3	6.4	6.4	6.4	5.7	4.3	6.3	6.3	6.3	5.7	4.4	5.3	5.3	5.3	5.3	4.4	18.0
20.0	7.3	7.3	6.9	5.5		7.3	7.3	7.0	5.5		6.4	6.4	6.4	5.5		6.3	6.3	6.3	5.6		5.3	5.3	5.3	5.3	4.3	20.0
22.0	6.8	7.1	6.6	5.4		6.4	6.7	6.8	5.4		6.4	6.4	6.4	5.4		6.3	6.3	6.3	5.5		5.3	5.3	5.3	5.3		22.0
24.0	5.6	5.8	6.2	5.3		5.2	5.5	5.8	5.3		5.8	6.1	6.4	5.3		5.4	5.7	6.1	5.4		5.3	5.3	5.3	5.3		24.0
26.0	4.6	4.8	5.1	5.2		4.2	4.5	4.8	5.0		4.8	5.0	5.3	5.2		4.4	4.7	5.0	5.2		4.4	4.6	5.0	5.0		26.0
28.0	3.8	4.0	4.2	4.4		3.4	3.6	3.9	4.1		4.0	4.2	4.4	4.6		3.6	3.8	4.1	4.3		3.6	3.8	4.1	4.3		28.0
30.0	3.0	3.2	3.4			2.7	2.9	3.1	3.3		3.3	3.4	3.7	3.8		2.9	3.1	3.3	3.5		2.8	3.1	3.3	3.5		30.0
32.0	2.4	2.6	2.8			2.0	2.2	2.4			2.6	2.8	3.0			2.3	2.4	2.7	2.8		2.2	2.4	2.6	2.8		32.0
34.0	1.9	2.0	2.2				1.6	1.8			2.1	2.2	2.4			1.7	1.9	2.1				1.8	2.1	2.2		34.0
36.0	1.3	1.5	1.6								1.6	1.7	1.9					1.5								36.0
38.0													1.4													38.0
40.0																										40.0
44.0																										44.0
48.0																										48.0
52.0																										52.0
56.0																										56.0
60.0																										60.0
64.0																										64.0
68.0																										68.0
72.0																										72.0
1	46	46	46	46	46	92	92	92	92	92	46	46	46	46	46	92	92	92	92	92	100	100	100	100	100	1
2	92	92	92	92	92	92	92	92	92	92	92	92	92	92	92	92	92	92	92	92	100	100	100	100	100	2
3	92	92	92	92	92	92	92	92	92	92	92	92	92	92	92	92	92	92	92	92	100	100	100	100	100	3
4	92	92	92	92	92	92	92	92	92	92	92	92	92	92	92	92	92	92	92	92	100	100	100	100	100	4
5	46	46	46	46	46	46	46	46	46	46	92	92	92	92	92	92	92	92	92	92	100	100	100	100	100	5
ID	31	31	31	31	31	32	32	32	32	32	23	23	23	23	23	24	24	24	24	24	16	16	16	16	16	ID
[DEG]	50~83	51~85	52~85	59~85	74~85	59~83	58~85	59~85	60~85	74~85	54~83	55~85	54~85	60~85	74~85	60~83	61~85	60~85	60~85	74~85	65~83	63~85	65~85	65~85	74~85	[DEG]
	1	1	1	1	1	1	1	1	1	1	1	1	1	1	1	1	1	1	1	1	1	1	1	1	1	
	8.7t	8.7t	8.7t	8.7t	8.7t	8.7t	8.7t	8.7t	8.7t	8.7t	8.7t	8.7t	8.7t	8.7t	8.7t	8.7t	8.7t	8.7t	8.7t	8.7t	8.7t	8.7t	8.7t	8.7t	8.7t	

FLJ	1.6m + 12.4m	28.9 t	8.0m x 5.0m	360 °	JPN

m	12.8	12.8	12.8	12.8	12.8	25.8	25.8	25.8	25.8	25.8	30.1	30.1	30.1	30.1	30.1	30.1	30.1	30.1	30.1	30.1	34.4	34.4	34.4	34.4	34.4	m
°	5	15	30	45	60	5	15	30	45	60	5	15	30	45	60	5	15	30	45	60	5	15	30	45	60	°
3.0																										3.0
3.5	4.3																									3.5
4.0	4.3																									4.0
4.5	4.3																									4.5
5.0	4.3																									5.0
6.0	4.3	4.3				4.3																				6.0
7.0	4.3	4.3				4.3	4.3				4.3					4.3										7.0
8.0	4.3	4.3				4.3	4.3				4.3	4.3				4.3	4.3				4.3	4.3				8.0
9.0	4.3	4.3	4.3			4.3	4.3				4.3	4.3				4.3	4.3				4.3	4.3				9.0
10.0	4.3	4.3	4.1			4.3	4.3	4.3			4.3	4.3				4.3	4.3				4.3	4.3				10.0
11.0	4.3	4.3	3.9	3.2		4.3	4.3	4.3			4.3	4.3	4.3			4.3	4.3	4.3			4.3	4.3	4.3			11.0
12.0	4.3	4.3	3.7	3.1		4.3	4.3	4.3	3.3		4.3	4.3	4.3			4.3	4.3	4.3			4.3	4.3	4.3			12.0
14.0	4.1	3.8	3.4	2.9		4.3	4.3	4.0	3.2	2.4	4.3	4.3	4.2	3.2	2.4	4.3	4.3	4.2	3.2	2.4	4.3	4.3	4.3	3.3		14.0
16.0	3.6	3.4	3.1	2.7		4.3	4.3	3.7	3.0	2.4	4.3	4.3	3.9	3.1	2.4	4.3	4.3	3.9	3.1	2.4	4.3	4.3	4.0	3.1	2.4	16.0
18.0	3.2	3.1	2.9			4.3	4.2	3.5	2.9		4.3	4.3	3.7	3.0		4.3	4.3	3.7	3.0		4.3	4.3	3.8	3.0	2.3	18.0
20.0	2.9	2.9				4.3	3.9	3.3	2.8		4.3	4.2	3.5	2.9		4.3	4.2	3.5	2.9		4.3	4.3	3.6	2.9		20.0
22.0	2.6	2.7				4.0	3.6	3.1	2.7		4.3	3.9	3.3	2.8		4.3	3.9	3.3	2.8		4.3	4.2	3.4	2.8		22.0
24.0						3.7	3.4	3.0			4.1	3.7	3.1	2.7		4.1	3.7	3.1	2.7		4.3	3.9	3.3	2.8		24.0
26.0						3.4	3.2	2.9			3.8	3.4	3.0			3.8	3.4	3.0			4.1	3.7	3.1	2.7		26.0
28.0						3.1	3.0	2.8			3.5	3.3	2.9			3.5	3.3	2.9			3.8	3.5	3.0			28.0
30.0						2.9	2.8				2.9	3.1	2.8			3.2	3.1	2.8			3.0	3.3	2.9			30.0
32.0						2.7	2.7				2.2	2.5	2.7			2.9	2.9	2.7			2.4	2.7	2.8			32.0
34.0						2.2					1.7	1.9				2.4	2.5				1.8	2.1	2.3			34.0
36.0												1.3				1.9	2.0				1.3	1.5				36.0
38.0																1.4										38.0
40.0																										40.0
44.0																										44.0
48.0																										48.0
52.0																										52.0
56.0																										56.0
60.0																										60.0
64.0																										64.0
68.0																										68.0
72.0																										72.0
1	0	0	0	0		46	46	46	46	46	92	92	92	92	92	46	46	46	46	46	92	92	92	92	92	1
2	0	0	0	0		46	46	46	46	46	46	46	46	46	46	46	46	46	46	46	46	46	46	46	46	2
3	0	0	0	0		46	46	46	46	46	46	46	46	46	46	46	46	46	46	46	46	46	46	46	46	3
4	0	0	0	0		0	0	0	0	0	0	0	0	0	0	46	46	46	46	46	46	46	46	46	46	4
5	0	0	0	0		0	0	0	0	0	0	0	0	0	0	0	0	0	0	0	0	0	0	0	0	5
ID	1	1	1	1		66	66	66	66	66	67	67	67	67	67	54	54	54	54	54	55	55	55	55	55	ID
[DEG]	0~83	0~85	0~85	0~85		25~83	27~85	47~85	58~85	76~85	36~83	33~85	46~85	59~85	75~85	25~83	27~85	45~85	59~85	75~85	40~83	42~85	44~85	60~85	74~85	[DEG]
	1	1	1	1		1	1	1	1	1	1	1	1	1	1	1	1	1	1	1	1	1	1	1	1	
	8.7t	8.7t	8.7t	8.7t		8.7t	8.7t	8.7t	8.7t	8.7t	8.7t	8.7t	8.7t	8.7t	8.7t	8.7t	8.7t	8.7t	8.7t	8.7t	8.7t	8.7t	8.7t	8.7t	8.7t	

フルオートラフィングジブ

FLJ	1.6m + 12.4m	28.9 t	8.0m x 5.0m	360 °	JPN

m	34.4	34.4	34.4	34.4	34.4	38.7	38.7	38.7	38.7	38.7	43.0	43.0	43.0	43.0	43.0	43.0	43.0	43.0	43.0	43.0	47.4	47.4	47.4	47.4	47.4	m
°	5	15	30	45	60	5	15	30	45	60	5	15	30	45	60	5	15	30	45	60	5	15	30	45	60	°
3.0																										3.0
3.5																										3.5
4.0																										4.0
4.5																										4.5
5.0																										5.0
6.0																										6.0
7.0	4.3																									7.0
8.0	4.3	4.3				4.3																				8.0
9.0	4.3	4.3				4.3	4.3				4.3					4.3										9.0
10.0	4.3	4.3				4.3	4.3				4.3	4.3				4.3	4.3				4.3					10.0
11.0	4.3	4.3	4.3			4.3	4.3				4.3	4.3				4.3	4.3				4.3	4.3				11.0
12.0	4.3	4.3	4.3			4.3	4.3	4.3			4.3	4.3				4.3	4.3				4.3	4.3				12.0
14.0	4.3	4.3	4.2	3.3		4.3	4.3	4.2	3.3		4.3	4.3	4.2			4.3	4.3	4.1			4.3	4.3	4.2			14.0
16.0	4.3	4.3	4.0	3.1	2.4	4.3	4.3	4.0	3.2	2.4	4.3	4.3	4.0	3.2	2.4	4.3	4.3	3.9	3.2		4.3	4.3	4.0	3.3		16.0
18.0	4.3	4.3	3.8	3.0	2.3	4.3	4.3	3.9	3.1	2.3	4.3	4.3	3.9	3.1	2.4	4.3	4.3	3.7	3.1	2.4	4.3	4.3	3.8	3.2	2.4	18.0
20.0	4.3	4.3	3.6	2.9		4.3	4.3	3.7	3.0	2.3	4.3	4.3	3.7	3.0	2.3	4.3	4.3	3.6	3.0	2.3	4.3	4.3	3.7	3.1	2.3	20.0
22.0	4.3	4.2	3.4	2.8		4.3	4.3	3.6	2.9		4.3	4.3	3.6	2.9		4.3	4.2	3.5	2.9		4.3	4.3	3.6	3.0	2.3	22.0
24.0	4.3	3.9	3.3	2.8		4.3	4.1	3.4	2.8		4.3	4.2	3.5	2.9		4.3	4.0	3.4	2.9		4.3	4.2	3.4	2.9		24.0
26.0	4.1	3.7	3.1	2.7		4.3	3.9	3.3	2.7		4.3	4.0	3.4	2.8		4.3	3.8	3.3	2.8		4.3	4.0	3.4	2.8		26.0
28.0	3.8	3.5	3.0			4.0	3.7	3.1	2.7		3.9	3.8	3.3	2.7		4.2	3.7	3.2	2.7		3.9	3.8	3.3	2.8		28.0
30.0	3.6	3.3	2.9			3.3	3.5	3.0			3.1	3.5	3.1	2.7		4.0	3.5	3.1	2.7		3.1	3.5	3.2	2.7		30.0
32.0	3.1	3.1	2.8			2.7	2.9	2.9			2.5	2.8	3.0			3.7	3.4	3.0			2.5	2.8	3.1	2.7		32.0
34.0	2.6	2.8	2.7			2.1	2.3	2.6			1.9	2.2	2.5			3.1	3.3	2.9			2.0	2.2	2.6	2.6		34.0
36.0	2.1	2.3				1.6	1.8	2.1			1.4	1.7	2.0			2.7	2.8	2.8			1.4	1.7	2.0			36.0
38.0	1.7	1.8					1.3	1.5					1.5			2.2	2.4	2.6					1.5			38.0
40.0	1.2	1.4														1.8	2.0	2.1								40.0
44.0																	1.3									44.0
48.0																										48.0
52.0																										52.0
56.0																										56.0
60.0																										60.0
64.0																										64.0
68.0																										68.0
72.0																										72.0
1	46	46	46	46	46	92	92	92	92	92	92	92	92	92	92	0	0	0	0	0	92	92	92	92	92	1
2	46	46	46	46	46	46	46	46	46	46	92	92	92	92	92	46	46	46	46	46	92	92	92	92	92	2
3	46	46	46	46	46	46	46	46	46	46	46	46	46	46	46	92	92	92	92	92	92	92	92	92	92	3
4	46	46	46	46	46	46	46	46	46	46	46	46	46	46	46	92	92	92	92	92	46	46	46	46	46	4
5	46	46	46	46	46	46	46	46	46	46	46	46	46	46	46	92	92	92	92	92	46	46	46	46	46	5
ID	49	49	49	49	49	50	50	50	50	50	42	42	42	42	42	21	21	21	21	21	38	38	38	38	38	ID
[DEG]	31~83	33~85	44~85	60~85	74~85	46~83	44~85	46~85	58~85	76~85	51~83	53~85	52~85	59~85	75~85	46~83	41~85	42~85	59~85	75~85	55~83	57~85	56~85	60~85	75~85	[DEG]
	1	1	1	1	1	1	1	1	1	1	1	1	1	1	1	1	1	1	1	1	1	1	1	1	1	
	8.7t	8.7t	8.7t	8.7t	8.7t	8.7t	8.7t	8.7t	8.7t	8.7t	8.7t	8.7t	8.7t	8.7t	8.7t	8.7t	8.7t	8.7t	8.7t	8.7t	8.7t	8.7t	8.7t	8.7t	8.7t	

m	47.4	47.4	47.4	47.4	47.4	51.7	51.7	51.7	51.7	51.7	51.7	51.7	51.7	51.7	51.7	56.0	56.0	56.0	56.0	56.0	60.0	60.0	60.0	60.0	60.0	m
°	5	15	30	45	60	5	15	30	45	60	5	15	30	45	60	5	15	30	45	60	5	15	30	45	60	°
3.0																										3.0
3.5																										3.5
4.0																										4.0
4.5																										4.5
5.0																										5.0
6.0																										6.0
7.0																										7.0
8.0																										8.0
9.0																										9.0
10.0	4.3																									10.0
11.0	4.3	4.3				4.3					4.3															11.0
12.0	4.3	4.3				4.3	4.3				4.3	4.3				4.3										12.0
14.0	4.3	4.3	4.1			4.3	4.3				4.3	4.3				4.3	4.3				3.3	3.3				14.0
16.0	4.3	4.3	4.0	3.3		4.3	4.3	3.9			4.3	4.3	3.9			4.3	4.3	3.8			3.3	3.3				16.0
18.0	4.3	4.3	3.8	3.2	2.4	4.3	4.3	3.8	3.2	2.4	4.3	4.3	3.7	3.2	2.4	4.3	4.3	3.7	3.2		3.3	3.3	3.3			18.0
20.0	4.3	4.3	3.7	3.1	2.3	4.3	4.3	3.7	3.1	2.3	4.3	4.3	3.6	3.1	2.3	4.3	4.3	3.6	3.1	2.3	3.3	3.3	3.3	3.1	2.3	20.0
22.0	4.3	4.3	3.5	3.0	2.3	4.3	4.3	3.5	3.0	2.3	4.3	4.2	3.5	3.0	2.3	4.3	4.2	3.5	3.1	2.3	3.3	3.3	3.3	3.0	2.3	22.0
24.0	4.3	4.1	3.4	2.9		4.3	4.1	3.4	2.9		4.3	4.0	3.4	2.9		4.3	4.0	3.4	3.0	2.3	3.3	3.3	3.3	3.0	2.3	24.0
26.0	4.3	3.9	3.3	2.8		4.3	3.9	3.3	2.9		4.3	3.9	3.2	2.9		4.3	3.9	3.2	2.9		3.3	3.3	3.2	2.9		26.0
28.0	4.3	3.8	3.2	2.8		4.0	3.8	3.2	2.8		4.3	3.7	3.2	2.8		4.1	3.7	3.2	2.9		3.3	3.3	3.1	2.8		28.0
30.0	3.6	3.6	3.1	2.7		3.2	3.6	3.1	2.8		3.8	3.6	3.1	2.8		3.4	3.6	3.1	2.8		3.3	3.3	3.0	2.8		30.0
32.0	3.0	3.3	3.0	2.7		2.6	2.9	3.1	2.7		3.1	3.4	3.0	2.7		2.8	3.1	3.0	2.7		2.7	3.0	3.0	2.7		32.0
34.0	2.4	2.7	3.0	2.6		2.1	2.3	2.7	2.7		2.6	2.8	2.9	2.7		2.2	2.5	2.9	2.7		2.2	2.5	2.8	2.7		34.0
36.0	2.0	2.2	2.5			1.5	1.8	2.1	2.4		2.1	2.3	2.6	2.6		1.7	2.0	2.3	2.5			2.0	2.3	2.5		36.0
38.0	1.5	1.7	2.0					1.6			1.7	1.9	2.1				1.5	1.8	2.0				1.8	2.0		38.0
40.0		1.3	1.5									1.5	1.7													40.0
44.0																										44.0
48.0																										48.0
52.0																										52.0
56.0																										56.0
60.0																										60.0
64.0																										64.0
68.0																										68.0
72.0																										72.0
1	46	46	46	46	46	92	92	92	92	92	46	46	46	46	46	92	92	92	92	92	100	100	100	100	100	1
2	92	92	92	92	92	92	92	92	92	92	92	92	92	92	92	92	92	92	92	92	100	100	100	100	100	2
3	92	92	92	92	92	92	92	92	92	92	92	92	92	92	92	92	92	92	92	92	100	100	100	100	100	3
4	92	92	92	92	92	92	92	92	92	92	92	92	92	92	92	92	92	92	92	92	100	100	100	100	100	4
5	46	46	46	46	46	46	46	46	46	46	92	92	92	92	92	92	92	92	92	92	100	100	100	100	100	5
ID	31	31	31	31	31	32	32	32	32	32	23	23	23	23	23	24	24	24	24	24	16	16	16	16	16	ID
[DEG]	52~83	51~85	53~85	60~85	75~85	58~83	60~85	60~85	61~85	74~85	56~83	56~85	57~85	58~85	74~85	61~83	61~85	63~85	62~85	74~85	66~83	65~85	65~85	66~85	74~85	[DEG]
	1	1	1	1	1	1	1	1	1	1	1	1	1	1	1	1	1	1	1	1	1	1	1	1	1	
	8.7t	8.7t	8.7t	8.7t	8.7t	8.7t	8.7t	8.7t	8.7t	8.7t	8.7t	8.7t	8.7t	8.7t	8.7t	8.7t	8.7t	8.7t	8.7t	8.7t	8.7t	8.7t	8.7t	8.7t	8.7t	

FLJ	1.6m + 17.4m	28.9 t	8.0m x 5.0m	360 °	JPN

m	12.8	12.8	12.8	12.8	12.8	25.8	25.8	25.8	25.8	25.8	30.1	30.1	30.1	30.1	30.1	30.1	30.1	30.1	30.1	30.1	34.4	34.4	34.4	34.4	34.4	m
°	5	15	30	45	60	5	15	30	45	60	5	15	30	45	60	5	15	30	45	60	5	15	30	45	60	°
3.0																										3.0
3.5																										3.5
4.0																										4.0
4.5																										4.5
5.0	3.3																									5.0
6.0	3.3																									6.0
7.0	3.3																									7.0
8.0	3.3	3.3				3.3					3.3					3.3										8.0
9.0	3.3	3.3				3.3	3.3				3.3					3.3					3.3					9.0
10.0	3.3	3.3				3.3	3.3				3.3	3.3				3.3	3.3				3.3					10.0
11.0	3.3	3.3				3.3	3.3				3.3	3.3				3.3	3.3				3.3	3.3				11.0
12.0	3.3	3.2	2.6			3.3	3.3				3.3	3.3				3.3	3.3				3.3	3.3				12.0
14.0	3.3	2.9	2.4			3.3	3.2	2.6			3.3	3.3	2.7			3.3	3.2	2.6			3.3	3.3				14.0
16.0	2.9	2.6	2.2	1.8		3.3	3.0	2.5			3.3	3.1	2.5			3.3	3.0	2.5			3.3	3.1	2.5			16.0
18.0	2.5	2.3	2.0	1.7		3.3	2.8	2.3	1.9		3.3	2.9	2.4	1.9		3.3	2.9	2.4	1.9		3.3	2.9	2.4	1.9		18.0
20.0	2.3	2.1	1.8	1.6		3.1	2.6	2.2	1.8		3.2	2.7	2.2	1.8	1.5	3.2	2.7	2.2	1.8	1.5	3.3	2.8	2.3	1.8	1.5	20.0
22.0	2.0	1.9	1.7			2.9	2.5	2.0	1.7		3.0	2.6	2.1	1.7	1.5	3.0	2.6	2.1	1.7	1.5	3.1	2.6	2.2	1.8	1.5	22.0
24.0	1.8	1.8	1.6			2.7	2.4	1.9	1.6		2.8	2.5	2.0	1.7		2.8	2.4	2.0	1.7		2.9	2.5	2.1	1.7		24.0
26.0	1.7	1.6				2.5	2.2	1.8	1.6		2.7	2.3	1.9	1.6		2.6	2.3	1.9	1.6		2.7	2.4	2.0	1.6		26.0
28.0	1.5					2.3	2.1	1.7	1.5		2.5	2.2	1.8	1.6		2.5	2.2	1.8	1.6		2.6	2.3	1.9	1.6		28.0
30.0						2.1	1.9	1.7			2.4	2.1	1.7	1.5		2.4	2.1	1.7	1.5		2.5	2.2	1.8	1.5		30.0
32.0						2.0	1.8	1.6			2.2	2.0	1.7			2.2	2.0	1.7			2.4	2.1	1.7	1.5		32.0
34.0						1.8	1.7				2.0	1.9	1.6			2.0	1.9	1.6			2.3	2.0	1.7			34.0
36.0						1.7	1.7				1.9	1.8	1.6			1.9	1.8	1.6			2.0	1.9	1.6			36.0
38.0						1.6	1.6				1.5	1.7				1.8	1.7				1.6	1.8	1.6			38.0
40.0						1.5						1.2				1.7	1.6					1.4				40.0
44.0																										44.0
48.0																										48.0
52.0																										52.0
56.0																										56.0
60.0																										60.0
64.0																										64.0
68.0																										68.0
72.0																										72.0
1	0	0	0	0		46	46	46	46		92	92	92	92	92	46	46	46	46	46	92	92	92	92	92	1
2	0	0	0	0		46	46	46	46		46	46	46	46	46	46	46	46	46	46	46	46	46	46	46	2
3	0	0	0	0		46	46	46	46		46	46	46	46	46	46	46	46	46	46	46	46	46	46	46	3
4	0	0	0	0		0	0	0	0		0	0	0	0	0	46	46	46	46	46	46	46	46	46	46	4
5	0	0	0	0		0	0	0	0		0	0	0	0	0	0	0	0	0	0	0	0	0	0	0	5
ID	1	1	1	1		66	66	66	66		67	67	67	67	67	54	54	54	54	54	55	55	55	55	55	ID
[DEG]	0~83	0~85	0~85	0~85		20~83	30~85	44~85	60~85		37~83	35~85	43~85	57~85	73~85	33~83	35~85	43~85	57~85	73~85	44~83	43~85	46~85	58~85	75~85	[DEG]
	1	1	1	1		1	1	1	1		1	1	1	1	1	1	1	1	1	1	1	1	1	1	1	
	8.7t	8.7t	8.7t	8.7t		8.7t	8.7t	8.7t	8.7t		8.7t	8.7t	8.7t	8.7t	8.7t	8.7t	8.7t	8.7t	8.7t	8.7t	8.7t	8.7t	8.7t	8.7t	8.7t	

m	34.4	34.4	34.4	34.4	34.4	38.7	38.7	38.7	38.7	38.7	43.0	43.0	43.0	43.0	43.0	43.0	43.0	43.0	43.0	43.0	47.4	47.4	47.4	47.4	47.4	m
°	5	15	30	45	60	5	15	30	45	60	5	15	30	45	60	5	15	30	45	60	5	15	30	45	60	°
3.0																										3.0
3.5																										3.5
4.0																										4.0
4.5																										4.5
5.0																										5.0
6.0																										6.0
7.0																										7.0
8.0																										8.0
9.0	3.3																									9.0
10.0	3.3					3.3																				10.0
11.0	3.3	3.3				3.3					3.3					2.9										11.0
12.0	3.3	3.3				3.3	3.3				3.3	3.3				2.9					3.2					12.0
14.0	3.3	3.2				3.3	3.3				3.3	3.2				2.9	2.9				3.2	3.2				14.0
16.0	3.3	3.0	2.5			3.3	3.1	2.5			3.3	3.1				2.9	2.9				3.2	3.1				16.0
18.0	3.3	2.9	2.4	1.9		3.3	2.9	2.4			3.3	2.9	2.4			2.9	2.8	2.3			3.2	2.9	2.4			18.0
20.0	3.2	2.7	2.3	1.8	1.5	3.3	2.8	2.3	1.9		3.3	2.8	2.3	1.9		2.9	2.7	2.2	1.9		3.2	2.8	2.3			20.0
22.0	3.0	2.6	2.2	1.8	1.5	3.1	2.6	2.2	1.8	1.5	3.1	2.7	2.2	1.8	1.5	2.9	2.6	2.2	1.8	1.5	3.1	2.7	2.2	1.8		22.0
24.0	2.9	2.5	2.1	1.7		2.9	2.5	2.1	1.7	1.5	3.0	2.5	2.1	1.8	1.5	2.9	2.5	2.1	1.8	1.5	3.0	2.5	2.1	1.8	1.5	24.0
26.0	2.7	2.4	2.0	1.6		2.8	2.4	2.1	1.7		2.8	2.4	2.1	1.7		2.7	2.4	2.0	1.7		2.9	2.4	2.1	1.7	1.4	26.0
28.0	2.6	2.3	1.9	1.6		2.7	2.3	2.0	1.6		2.7	2.3	2.0	1.6		2.6	2.3	2.0	1.6		2.7	2.4	2.0	1.7		28.0
30.0	2.5	2.2	1.8	1.5		2.5	2.2	1.9	1.6		2.6	2.3	1.9	1.6		2.5	2.2	1.9	1.6		2.6	2.3	1.9	1.6		30.0
32.0	2.4	2.1	1.7	1.5		2.4	2.1	1.8	1.5		2.5	2.2	1.9	1.6		2.4	2.1	1.8	1.6		2.5	2.2	1.9	1.6		32.0
34.0	2.3	2.0	1.7			2.3	2.1	1.7	1.5		2.4	2.1	1.8	1.5		2.3	2.0	1.8	1.5		2.4	2.1	1.8	1.6		34.0
36.0	2.1	1.9	1.6			2.2	2.0	1.7			2.0	2.0	1.7	1.5		2.2	2.0	1.7	1.5		2.0	2.0	1.8	1.5		36.0
38.0	2.0	1.8	1.6			1.8	1.9	1.6			1.6	1.9	1.7			2.2	1.9	1.7			1.5	1.9	1.7	1.5		38.0
40.0	1.8	1.7				1.3	1.6	1.6				1.5	1.6			2.1	1.9	1.6				1.4	1.7			40.0
44.0		1.3														1.6	1.8	1.6								44.0
48.0																	1.2									48.0
52.0																										52.0
56.0																										56.0
60.0																										60.0
64.0																										64.0
68.0																										68.0
72.0																										72.0
1	46	46	46	46	46	92	92	92	92	92	92	92	92	92	92	0	0	0	0	0	92	92	92	92	92	1
2	46	46	46	46	46	46	46	46	46	46	92	92	92	92	92	46	46	46	46	46	92	92	92	92	92	2
3	46	46	46	46	46	46	46	46	46	46	46	46	46	46	46	92	92	92	92	92	92	92	92	92	92	3
4	46	46	46	46	46	46	46	46	46	46	46	46	46	46	46	92	92	92	92	92	46	46	46	46	46	4
5	46	46	46	46	46	46	46	46	46	46	46	46	46	46	46	92	92	92	92	92	46	46	46	46	46	5
ID	49	49	49	49	49	50	50	50	50	50	42	42	42	42	42	21	21	21	21	21	38	38	38	38	38	ID
[DEG]	40~83	35~85	46~85	58~85	75~85	46~83	48~85	51~85	59~85	74~85	53~83	53~85	56~85	57~85	74~85	46~83	42~85	44~85	58~85	74~85	57~83	57~85	59~85	61~85	73~85	[DEG]
	1	1	1	1	1	1	1	1	1	1	1	1	1	1	1	1	1	1	1	1	1	1	1	1	1	
	8.7t	8.7t	8.7t	8.7t	8.7t	8.7t	8.7t	8.7t	8.7t	8.7t	8.7t	8.7t	8.7t	8.7t	8.7t	8.7t	8.7t	8.7t	8.7t	8.7t	8.7t	8.7t	8.7t	8.7t	8.7t	

フルオートラフィングジブ

FLJ	1.6m + 17.4m	28.9 t	8.0m x 5.0m	360 °	JPN

m	47.4	47.4	47.4	47.4	47.4	51.7	51.7	51.7	51.7	51.7	51.7	51.7	51.7	51.7	51.7	56.0	56.0	56.0	56.0	56.0	60.0	60.0	60.0	60.0	60.0	m
°	5	15	30	45	60	5	15	30	45	60	5	15	30	45	60	5	15	30	45	60	5	15	30	45	60	°
3.0																										3.0
3.5																										3.5
4.0																										4.0
4.5																										4.5
5.0																										5.0
6.0																										6.0
7.0																										7.0
8.0																										8.0
9.0																										9.0
10.0																										10.0
11.0																										11.0
12.0	3.1																									12.0
14.0	3.1	3.1				3.2	3.1				3.2	3.0				2.9										14.0
16.0	3.1	3.0				3.2	3.0				3.1	2.9				2.9	2.9				2.8	2.7				16.0
18.0	3.1	2.9	2.4			3.2	2.9				3.1	2.8				2.9	2.8				2.8	2.6				18.0
20.0	3.1	2.7	2.3			3.1	2.7	2.3			3.0	2.7	2.2			2.9	2.7	2.2			2.8	2.6				20.0
22.0	3.1	2.6	2.2	1.8		3.1	2.6	2.2	1.8		2.9	2.6	2.2	1.8		2.9	2.6	2.2			2.7	2.5	2.1			22.0
24.0	2.9	2.5	2.1	1.8	1.5	2.9	2.5	2.1	1.8	1.5	2.9	2.5	2.1	1.8	1.5	2.8	2.5	2.1	1.8		2.7	2.5	2.1	1.8		24.0
26.0	2.8	2.4	2.0	1.7	1.4	2.8	2.4	2.1	1.7	1.4	2.8	2.4	2.0	1.7	1.4	2.8	2.4	2.0	1.8	1.4	2.6	2.4	2.0	1.8	1.4	26.0
28.0	2.7	2.3	2.0	1.7		2.7	2.3	2.0	1.7	1.4	2.7	2.3	2.0	1.7	1.4	2.7	2.3	2.0	1.7	1.4	2.6	2.3	2.0	1.7	1.4	28.0
30.0	2.6	2.2	1.9	1.6		2.6	2.3	1.9	1.6		2.6	2.2	1.9	1.6		2.6	2.2	1.9	1.7		2.5	2.2	1.9	1.7	1.4	30.0
32.0	2.5	2.2	1.9	1.6		2.5	2.2	1.9	1.6		2.5	2.2	1.9	1.6		2.5	2.2	1.9	1.6		2.5	2.2	1.8	1.6		32.0
34.0	2.4	2.1	1.8	1.6		2.4	2.1	1.8	1.6		2.4	2.1	1.8	1.6		2.4	2.1	1.8	1.6		2.4	2.1	1.8	1.6		34.0
36.0	2.3	2.0	1.8	1.5		2.1	2.0	1.8	1.5		2.3	2.0	1.7	1.5		2.2	2.0	1.8	1.6		2.1	2.0	1.7	1.6		36.0
38.0	2.0	2.0	1.7	1.5		1.6	2.0	1.7	1.5		2.1	2.0	1.7	1.5		1.8	2.0	1.7	1.5		1.7	2.0	1.7	1.5		38.0
40.0	1.6	1.9	1.7				1.5	1.7	1.5		1.7	1.9	1.7	1.5			1.7	1.7	1.5				1.7	1.5		40.0
44.0			1.4									1.3	1.6													44.0
48.0																										48.0
52.0																										52.0
56.0																										56.0
60.0																										60.0
64.0																										64.0
68.0																										68.0
72.0																										72.0
1	46	46	46	46	46	92	92	92	92	92	46	46	46	46	46	92	92	92	92	92	100	100	100	100	100	1
2	92	92	92	92	92	92	92	92	92	92	92	92	92	92	92	92	92	92	92	92	100	100	100	100	100	2
3	92	92	92	92	92	92	92	92	92	92	92	92	92	92	92	92	92	92	92	92	100	100	100	100	100	3
4	92	92	92	92	92	92	92	92	92	92	92	92	92	92	92	92	92	92	92	92	100	100	100	100	100	4
5	46	46	46	46	46	46	46	46	46	46	92	92	92	92	92	92	92	92	92	92	100	100	100	100	100	5
ID	31	31	31	31	31	32	32	32	32	32	23	23	23	23	23	24	24	24	24	24	16	16	16	16	16	ID
[DEG]	54~83	57~85	54~85	61~85	73~85	60~83	60~85	63~85	60~85	73~85	58~83	56~85	58~85	59~85	73~85	63~83	63~85	65~85	63~85	73~85	65~83	67~85	67~85	69~85	73~85	[DEG]
	1	1	1	1	1	1	1	1	1	1	1	1	1	1	1	1	1	1	1	1	1	1	1	1	1	
	8.7t	8.7t	8.7t	8.7t	8.7t	8.7t	8.7t	8.7t	8.7t	8.7t	8.7t	8.7t	8.7t	8.7t	8.7t	8.7t	8.7t	8.7t	8.7t	8.7t	8.7t	8.7t	8.7t	8.7t	8.7t	

FLJ	1.6m + 7.4m	25.4 t	8.0m x 7.5m	360 °	JPN

m	12.8	12.8	12.8	12.8	12.8	25.8	25.8	25.8	25.8	25.8	30.1	30.1	30.1	30.1	30.1	30.1	30.1	30.1	30.1	30.1	34.4	34.4	34.4	34.4	34.4	m
°	5	15	30	45	60	5	15	30	45	60	5	15	30	45	60	5	15	30	45	60	5	15	30	45	60	°
3.0	7.3																									3.0
3.5	7.3	7.3																								3.5
4.0	7.3	7.3				7.3																				4.0
4.5	7.3	7.3				7.3																				4.5
5.0	7.3	7.3				7.3	7.3				7.3					7.3										5.0
6.0	7.3	7.3	7.3			7.3	7.3				7.3	7.3				7.3	7.3				7.3	7.3				6.0
7.0	7.3	7.3	7.3	5.9		7.3	7.3	7.3			7.3	7.3	7.3			7.3	7.3	7.3			7.3	7.3				7.0
8.0	7.3	7.3	7.0	5.7		7.3	7.3	7.3	6.2		7.3	7.3	7.3			7.3	7.3	7.3			7.3	7.3	7.3			8.0
9.0	7.3	7.3	6.6	5.5		7.3	7.3	7.3	6.0	4.5	7.3	7.3	7.3	6.1		7.3	7.3	7.3	6.1		7.3	7.3	7.3	6.2		9.0
10.0	7.3	7.3	6.3	5.4		7.3	7.3	7.3	5.9	4.5	7.3	7.3	7.3	6.0	4.5	7.3	7.3	7.3	6.0	4.5	7.3	7.3	7.3	6.1	4.5	10.0
11.0	7.3	7.0	6.1	5.2		7.3	7.3	7.3	5.8	4.4	7.3	7.3	7.3	5.9	4.5	7.3	7.3	7.3	5.9	4.5	7.3	7.3	7.3	6.0	4.5	11.0
12.0	7.1	6.5	5.8			7.3	7.3	7.0	5.6		7.3	7.3	7.3	5.8	4.4	7.3	7.3	7.3	5.8	4.4	7.3	7.3	7.3	5.9	4.4	12.0
14.0	6.1	5.9	5.4			7.3	7.3	6.6	5.4		7.3	7.3	6.9	5.6		7.3	7.3	6.9	5.6		7.3	7.3	7.2	5.7	4.4	14.0
16.0	5.4	5.3				7.3	7.3	6.2	5.2		7.3	7.3	6.5	5.4		7.3	7.3	6.5	5.4		7.3	7.3	6.8	5.5		16.0
18.0	4.9					7.3	6.9	5.9	5.1		7.3	7.3	6.2	5.2		7.3	7.3	6.2	5.2		7.3	7.3	6.5	5.3		18.0
20.0						7.1	6.4	5.7			7.3	7.0	5.9	5.1		7.3	7.0	5.9	5.1		7.3	7.3	6.2	5.2		20.0
22.0						6.5	6.0	5.4			7.3	6.6	5.7			7.3	6.6	5.7			7.3	7.1	6.0	5.1		22.0
24.0						6.0	5.7	5.3			6.8	6.2	5.5			6.8	6.2	5.5			7.3	6.7	5.7			24.0
26.0						5.5	5.4				6.2	5.8	5.3			6.2	5.8	5.3			6.8	6.3	5.6			26.0
28.0						5.1	5.1				5.4	5.5				5.8	5.5				5.7	5.9	5.4			28.0
30.0						4.8					4.4	4.6				5.2	5.3				4.7	4.9	5.1			30.0
32.0											3.6	3.7				4.4	4.5				3.9	4.0				32.0
34.0											2.9					3.7					3.2	3.3				34.0
36.0																					2.5	2.6				36.0
38.0																					1.9					38.0
40.0																										40.0
44.0																										44.0
48.0																										48.0
52.0																										52.0
56.0																										56.0
60.0																										60.0
64.0																										64.0
68.0																										68.0
72.0																										72.0
1	0	0	0	0		46	46	46	46	46	92	92	92	92	92	46	46	46	46	46	92	92	92	92	92	1
2	0	0	0	0		46	46	46	46	46	46	46	46	46	46	46	46	46	46	46	46	46	46	46	46	2
3	0	0	0	0		46	46	46	46	46	46	46	46	46	46	46	46	46	46	46	46	46	46	46	46	3
4	0	0	0	0		0	0	0	0	0	0	0	0	0	0	46	46	46	46	46	46	46	46	46	46	4
5	0	0	0	0		0	0	0	0	0	0	0	0	0	0	0	0	0	0	0	0	0	0	0	0	5
ID	1	1	1	1		66	66	66	66	66	67	67	67	67	67	54	54	54	54	54	55	55	55	55	55	ID
[DEG]	0~83	0~85	0~85	0~85		22~83	31~85	45~85	61~85	74~85	22~83	31~85	44~85	62~85	77~85	22~83	31~85	43~85	61~85	77~85	23~83	31~85	47~85	59~85	76~85	[DEG]
	1	1	1	1		1	1	1	1	1	1	1	1	1	1	1	1	1	1	1	1	1	1	1	1	
	8.7t	8.7t	8.7t	8.7t		8.7t	8.7t	8.7t	8.7t	8.7t	8.7t	8.7t	8.7t	8.7t	8.7t	8.7t	8.7t	8.7t	8.7t	8.7t	8.7t	8.7t	8.7t	8.7t	8.7t	

FLJ	1.6m + 7.4m	25.4 t	8.0m x 7.5m	360 °	JPN

m	34.4	34.4	34.4	34.4	34.4	38.7	38.7	38.7	38.7	38.7	43.0	43.0	43.0	43.0	43.0	43.0	43.0	43.0	43.0	43.0	47.4	47.4	47.4	47.4	47.4	m
°	5	15	30	45	60	5	15	30	45	60	5	15	30	45	60	5	15	30	45	60	5	15	30	45	60	°
3.0																										3.0
3.5																										3.5
4.0																										4.0
4.5																										4.5
5.0																										5.0
6.0	7.3	7.3																								6.0
7.0	7.3	7.3				7.3	7.3																			7.0
8.0	7.3	7.3	7.3			7.3	7.3				7.3	7.3				7.3	7.3					7.3				8.0
9.0	7.3	7.3	7.3	6.2		7.3	7.3	7.3			7.3	7.3	7.3			7.3	7.3				7.3	7.3				9.0
10.0	7.3	7.3	7.3	6.1	4.5	7.3	7.3	7.3	6.2		7.3	7.3	7.3			7.3	7.3	7.3			7.3	7.3	7.3			10.0
11.0	7.3	7.3	7.3	6.0	4.5	7.3	7.3	7.3	6.1	4.5	7.3	7.3	7.3	6.1	4.5	7.3	7.3	7.3	6.1		7.3	7.3	7.3			11.0
12.0	7.3	7.3	7.3	5.9	4.4	7.3	7.3	7.3	6.0	4.5	7.3	7.3	7.3	6.0	4.5	7.3	7.3	7.3	6.0	4.5	7.3	7.3	7.3	6.1	4.5	12.0
14.0	7.3	7.3	7.2	5.7	4.4	7.3	7.3	7.3	5.8	4.4	7.3	7.3	7.3	5.8	4.4	7.3	7.3	7.3	5.8	4.4	7.3	7.3	7.3	5.9	4.4	14.0
16.0	7.3	7.3	6.8	5.5		7.3	7.3	7.0	5.6		7.3	7.3	7.3	5.7	4.4	7.3	7.3	7.3	5.7	4.4	7.3	7.3	7.3	5.8	4.4	16.0
18.0	7.3	7.3	6.5	5.3		7.3	7.3	6.7	5.4		7.3	7.3	6.9	5.5		7.3	7.3	6.9	5.5		7.3	7.3	7.1	5.6		18.0
20.0	7.3	7.3	6.2	5.2		7.3	7.3	6.4	5.3		7.3	7.3	6.7	5.4		7.3	7.3	6.7	5.4		7.3	7.3	6.9	5.5		20.0
22.0	7.3	7.1	6.0	5.1		7.3	7.3	6.2	5.2		7.3	7.3	6.4	5.3		7.3	7.3	6.4	5.3		7.3	7.3	6.6	5.4		22.0
24.0	7.3	6.7	5.7			7.3	7.1	6.0	5.1		7.3	7.3	6.2	5.2		6.8	6.7	6.2	5.2		7.3	7.3	6.4	5.3		24.0
26.0	7.0	6.3	5.6			7.1	6.7	5.8			7.0	7.2	6.0	5.1		6.2	6.1	6.0	5.1		7.1	7.3	6.2	5.2		26.0
28.0	6.5	6.0	5.4			6.0	6.2	5.6			5.9	6.1	5.8			5.7	5.6	5.6			6.0	6.2	6.0	5.1		28.0
30.0	5.6	5.7	5.3			5.1	5.3	5.4			5.0	5.2	5.4			5.2	5.2	5.2			5.0	5.2	5.5			30.0
32.0	4.8	4.9				4.3	4.4	4.6			4.1	4.3	4.5			4.7	4.7	4.7			4.2	4.4	4.6			32.0
34.0	4.1	4.1				3.6	3.7				3.4	3.6	3.8			4.3	4.3	4.3			3.5	3.6	3.8			34.0
36.0	3.4	3.5				2.9	3.0				2.8	2.9	3.1			3.9	3.9	3.9			2.8	3.0	3.2			36.0
38.0	2.9					2.3	2.4				2.2	2.3				3.5	3.5				2.2	2.4	2.5			38.0
40.0						1.8					1.7	1.8				3.1	3.2				1.7	1.8				40.0
44.0																2.2										44.0
48.0																										48.0
52.0																										52.0
56.0																										56.0
60.0																										60.0
64.0																										64.0
68.0																										68.0
72.0																										72.0
1	46	46	46	46	46	92	92	92	92	92	92	92	92	92	92	0	0	0	0	0	92	92	92	92	92	1
2	46	46	46	46	46	46	46	46	46	46	92	92	92	92	92	46	46	46	46	46	92	92	92	92	92	2
3	46	46	46	46	46	46	46	46	46	46	46	46	46	46	46	92	92	92	92	92	92	92	92	92	92	3
4	46	46	46	46	46	46	46	46	46	46	46	46	46	46	46	92	92	92	92	92	46	46	46	46	46	4
5	46	46	46	46	46	46	46	46	46	46	46	46	46	46	46	92	92	92	92	92	46	46	46	46	46	5
ID	49	49	49	49	49	50	50	50	50	50	42	42	42	42	42	21	21	21	21	21	38	38	38	38	38	ID
[DEG]	23~83	30~85	46~85	59~85	75~85	30~83	30~85	45~85	60~85	75~85	38~83	39~85	44~85	61~85	74~85	17~83	31~85	45~85	61~85	74~85	45~83	46~85	47~85	59~85	74~85	[DEG]
	1	1	1	1	1	1	1	1	1	1	1	1	1	1	1	1	1	1	1	1	1	1	1	1	1	
	8.7t	8.7t	8.7t	8.7t	8.7t	8.7t	8.7t	8.7t	8.7t	8.7t	8.7t	8.7t	8.7t	8.7t	8.7t	8.7t	8.7t	8.7t	8.7t	8.7t	8.7t	8.7t	8.7t	8.7t	8.7t	

m	47.4	47.4	47.4	47.4	47.4	51.7	51.7	51.7	51.7	51.7	51.7	51.7	51.7	51.7	51.7	56.0	56.0	56.0	56.0	56.0	60.0	60.0	60.0	60.0	60.0	m
°	5	15	30	45	60	5	15	30	45	60	5	15	30	45	60	5	15	30	45	60	5	15	30	45	60	°
3.0																										3.0
3.5																										3.5
4.0																										4.0
4.5																										4.5
5.0																										5.0
6.0																										6.0
7.0																										7.0
8.0		7.3																								8.0
9.0	7.3	7.3					7.3					6.4														9.0
10.0	7.3	7.3	7.3			7.3	7.3				6.4	6.4					6.3									10.0
11.0	7.3	7.3	7.3			7.3	7.3	7.3			6.4	6.4	6.4			6.3	6.3					5.3				11.0
12.0	7.3	7.3	7.3	6.1	4.5	7.3	7.3	7.3			6.4	6.4	6.4			6.3	6.3	6.3			5.3	5.3				12.0
14.0	7.3	7.3	7.3	5.9	4.4	7.3	7.3	7.3	6.0	4.5	6.4	6.4	6.4	6.0	4.5	6.3	6.3	6.3	6.0	4.5	5.3	5.3	5.3			14.0
16.0	7.3	7.3	7.3	5.8	4.4	7.3	7.3	7.3	5.8	4.4	6.4	6.4	6.4	5.8	4.4	6.3	6.3	6.3	5.9	4.4	5.3	5.3	5.3	5.3	4.4	16.0
18.0	7.3	7.3	7.1	5.6		7.3	7.3	7.3	5.7	4.3	6.4	6.4	6.4	5.7	4.3	6.3	6.3	6.3	5.7	4.4	5.3	5.3	5.3	5.3	4.4	18.0
20.0	7.3	7.3	6.9	5.5		7.3	7.3	7.0	5.5		6.4	6.4	6.4	5.5		6.3	6.3	6.3	5.6		5.3	5.3	5.3	5.3	4.3	20.0
22.0	7.3	7.3	6.6	5.4		7.3	7.3	6.8	5.4		6.4	6.4	6.4	5.4		6.3	6.3	6.3	5.5		5.3	5.3	5.3	5.3		22.0
24.0	7.3	7.3	6.4	5.3		7.3	7.3	6.5	5.3		6.4	6.4	6.4	5.3		6.3	6.3	6.3	5.4		5.3	5.3	5.3	5.3		24.0
26.0	7.3	7.3	6.2	5.2		7.2	7.3	6.3	5.2		6.4	6.4	6.3	5.2		6.3	6.3	6.3	5.3		5.3	5.3	5.1	5.0		26.0
28.0	6.5	6.7	6.0	5.1		6.1	6.3	6.1	5.2		6.4	6.2	6.1	5.2		6.3	6.3	6.1	5.2		5.1	4.9	4.8	4.7		28.0
30.0	5.6	5.8	5.8			5.2	5.4	5.6	5.1		5.8	5.8	5.7	5.1		5.4	5.6	5.8	5.1		4.7	4.5	4.4	4.4		30.0
32.0	4.7	4.9	5.1			4.4	4.5	4.8			5.0	5.1	5.3			4.6	4.8	5.0	5.1		4.3	4.2	4.1	4.1		32.0
34.0	4.0	4.2	4.4			3.6	3.8	4.0			4.2	4.4	4.6			3.9	4.0	4.2			3.8	3.9	3.8	3.8		34.0
36.0	3.4	3.5	3.7			3.0	3.2	3.3			3.6	3.8	3.9			3.2	3.4	3.6			3.2	3.4	3.6			36.0
38.0	2.8	3.0	3.1			2.4	2.6	2.7			3.1	3.2	3.3			2.6	2.8	3.0			2.6	2.8	3.0			38.0
40.0	2.3	2.4				1.9	2.0	2.2			2.5	2.7	2.8			2.1	2.3	2.4			2.1	2.2	2.4			40.0
44.0	1.4	1.5									1.6	1.7				1.2	1.3	1.5				1.3	1.4			44.0
48.0																										48.0
52.0																										52.0
56.0																										56.0
60.0																										60.0
64.0																										64.0
68.0																										68.0
72.0																										72.0
1	46	46	46	46	46	92	92	92	92	92	46	46	46	46	46	92	92	92	92	92	100	100	100	100	100	1
2	92	92	92	92	92	92	92	92	92	92	92	92	92	92	92	92	92	92	92	92	100	100	100	100	100	2
3	92	92	92	92	92	92	92	92	92	92	92	92	92	92	92	92	92	92	92	92	100	100	100	100	100	3
4	92	92	92	92	92	92	92	92	92	92	92	92	92	92	92	92	92	92	92	92	100	100	100	100	100	4
5	46	46	46	46	46	46	46	46	46	46	92	92	92	92	92	92	92	92	92	92	100	100	100	100	100	5
ID	31	31	31	31	31	32	32	32	32	32	23	23	23	23	23	24	24	24	24	24	16	16	16	16	16	ID
[DEG]	38~83	39~85	47~85	59~85	74~85	50~83	51~85	52~85	60~85	74~85	44~83	45~85	46~85	61~85	74~85	49~83	50~85	51~85	59~85	74~85	57~83	54~85	54~85	60~85	74~85	[DEG]
	1	1	1	1	1	1	1	1	1	1	1	1	1	1	1	1	1	1	1	1	1	1	1	1	1	
	8.7t	8.7t	8.7t	8.7t	8.7t	8.7t	8.7t	8.7t	8.7t	8.7t	8.7t	8.7t	8.7t	8.7t	8.7t	8.7t	8.7t	8.7t	8.7t	8.7t	8.7t	8.7t	8.7t	8.7t	8.7t	

フルオートラフィングジブ

FLJ	1.6m + 12.4m	25.4 t	8.0m x 7.5m	360 °	JPN

m	12.8	12.8	12.8	12.8	12.8	25.8	25.8	25.8	25.8	25.8	30.1	30.1	30.1	30.1	30.1	30.1	30.1	30.1	30.1	30.1	34.4	34.4	34.4	34.4	34.4	m
°	5	15	30	45	60	5	15	30	45	60	5	15	30	45	60	5	15	30	45	60	5	15	30	45	60	°
3.0																										3.0
3.5	4.3																									3.5
4.0	4.3																									4.0
4.5	4.3																									4.5
5.0	4.3																									5.0
6.0	4.3	4.3				4.3																				6.0
7.0	4.3	4.3				4.3	4.3				4.3					4.3										7.0
8.0	4.3	4.3				4.3	4.3				4.3	4.3				4.3	4.3				4.3	4.3				8.0
9.0	4.3	4.3	4.3			4.3	4.3				4.3	4.3				4.3	4.3				4.3	4.3				9.0
10.0	4.3	4.3	4.1			4.3	4.3	4.3			4.3	4.3				4.3	4.3				4.3	4.3				10.0
11.0	4.3	4.3	3.9	3.2		4.3	4.3	4.3			4.3	4.3	4.3			4.3	4.3	4.3			4.3	4.3	4.3			11.0
12.0	4.3	4.3	3.7	3.1		4.3	4.3	4.3	3.3		4.3	4.3	4.3			4.3	4.3	4.3			4.3	4.3	4.3			12.0
14.0	4.1	3.8	3.4	2.9		4.3	4.3	4.0	3.2	2.4	4.3	4.3	4.2	3.2	2.4	4.3	4.3	4.2	3.2	2.4	4.3	4.3	4.3	3.3		14.0
16.0	3.6	3.4	3.1	2.7		4.3	4.3	3.7	3.0	2.4	4.3	4.3	3.9	3.1	2.4	4.3	4.3	3.9	3.1	2.4	4.3	4.3	4.0	3.1	2.4	16.0
18.0	3.2	3.1	2.9			4.3	4.2	3.5	2.9		4.3	4.3	3.7	3.0		4.3	4.3	3.7	3.0		4.3	4.3	3.8	3.0	2.3	18.0
20.0	2.9	2.9				4.3	3.9	3.3	2.8		4.3	4.2	3.5	2.9		4.3	4.2	3.5	2.9		4.3	4.3	3.6	2.9		20.0
22.0	2.6	2.7				4.0	3.6	3.1	2.7		4.3	3.9	3.3	2.8		4.3	3.9	3.3	2.8		4.3	4.2	3.4	2.8		22.0
24.0						3.7	3.4	3.0			4.1	3.7	3.1	2.7		4.1	3.7	3.1	2.7		4.3	3.9	3.3	2.8		24.0
26.0						3.4	3.2	2.9			3.8	3.4	3.0			3.8	3.4	3.0			4.1	3.7	3.1	2.7		26.0
28.0						3.1	3.0	2.8			3.5	3.3	2.9			3.5	3.3	2.9			3.8	3.5	3.0			28.0
30.0						2.9	2.8				3.2	3.1	2.8			3.2	3.1	2.8			3.6	3.3	2.9			30.0
32.0						2.7	2.7				3.0	2.9	2.7			3.0	2.9	2.7			3.3	3.1	2.8			32.0
34.0						2.5					2.8	2.8				2.8	2.8				3.1	3.0	2.7			34.0
36.0											2.7	2.7				2.7	2.7				3.0	2.9				36.0
38.0											2.5					2.5					2.8	2.8				38.0
40.0																					2.3	2.4				40.0
44.0																										44.0
48.0																										48.0
52.0																										52.0
56.0																										56.0
60.0																										60.0
64.0																										64.0
68.0																										68.0
72.0																										72.0
1	0	0	0	0		46	46	46	46	46	92	92	92	92	92	46	46	46	46	46	92	92	92	92	92	1
2	0	0	0	0		46	46	46	46	46	46	46	46	46	46	46	46	46	46	46	46	46	46	46	46	2
3	0	0	0	0		46	46	46	46	46	46	46	46	46	46	46	46	46	46	46	46	46	46	46	46	3
4	0	0	0	0		0	0	0	0	0	0	0	0	0	0	46	46	46	46	46	46	46	46	46	46	4
5	0	0	0	0		0	0	0	0	0	0	0	0	0	0	0	0	0	0	0	0	0	0	0	0	5
ID	1	1	1	1		66	66	66	66	66	67	67	67	67	67	54	54	54	54	54	55	55	55	55	55	ID
[DEG]	0~83	0~85	0~85	0~85		25~83	27~85	47~85	58~85	76~85	17~83	28~85	46~85	59~85	75~85	17~83	27~85	45~85	59~85	75~85	18~83	33~85	44~85	60~85	74~85	[DEG]
	1	1	1	1		1	1	1	1	1	1	1	1	1	1	1	1	1	1	1	1	1	1	1	1	
	8.7t	8.7t	8.7t	8.7t		8.7t	8.7t	8.7t	8.7t	8.7t	8.7t	8.7t	8.7t	8.7t	8.7t	8.7t	8.7t	8.7t	8.7t	8.7t	8.7t	8.7t	8.7t	8.7t	8.7t	

m	34.4	34.4	34.4	34.4	34.4	38.7	38.7	38.7	38.7	38.7	43.0	43.0	43.0	43.0	43.0	43.0	43.0	43.0	43.0	43.0	47.4	47.4	47.4	47.4	47.4	m
°	5	15	30	45	60	5	15	30	45	60	5	15	30	45	60	5	15	30	45	60	5	15	30	45	60	°
3.0																										3.0
3.5																										3.5
4.0																										4.0
4.5																										4.5
5.0																										5.0
6.0																										6.0
7.0	4.3																									7.0
8.0	4.3	4.3				4.3																				8.0
9.0	4.3	4.3				4.3	4.3				4.3					4.3										9.0
10.0	4.3	4.3				4.3	4.3				4.3	4.3				4.3	4.3				4.3					10.0
11.0	4.3	4.3	4.3			4.3	4.3				4.3	4.3				4.3	4.3				4.3	4.3				11.0
12.0	4.3	4.3	4.3			4.3	4.3	4.3			4.3	4.3				4.3	4.3				4.3	4.3				12.0
14.0	4.3	4.3	4.2	3.3		4.3	4.3	4.2	3.3		4.3	4.3	4.2			4.3	4.3	4.1			4.3	4.3	4.2			14.0
16.0	4.3	4.3	4.0	3.1	2.4	4.3	4.3	4.0	3.2	2.4	4.3	4.3	4.0	3.2	2.4	4.3	4.3	3.9	3.2		4.3	4.3	4.0	3.3		16.0
18.0	4.3	4.3	3.8	3.0	2.3	4.3	4.3	3.9	3.1	2.3	4.3	4.3	3.9	3.1	2.4	4.3	4.3	3.7	3.1	2.4	4.3	4.3	3.8	3.2	2.4	18.0
20.0	4.3	4.3	3.6	2.9		4.3	4.3	3.7	3.0	2.3	4.3	4.3	3.7	3.0	2.3	4.3	4.3	3.6	3.0	2.3	4.3	4.3	3.7	3.1	2.3	20.0
22.0	4.3	4.2	3.4	2.8		4.3	4.3	3.6	2.9		4.3	4.3	3.6	2.9		4.3	4.2	3.5	2.9		4.3	4.3	3.6	3.0	2.3	22.0
24.0	4.3	3.9	3.3	2.8		4.3	4.1	3.4	2.8		4.3	4.2	3.5	2.9		4.3	4.0	3.4	2.9		4.3	4.2	3.4	2.9		24.0
26.0	4.1	3.7	3.1	2.7		4.3	3.9	3.3	2.7		4.3	4.0	3.4	2.8		4.3	3.8	3.3	2.8		4.3	4.0	3.4	2.8		26.0
28.0	3.8	3.5	3.0			4.2	3.7	3.1	2.7		4.3	3.8	3.3	2.7		4.2	3.7	3.2	2.7		4.3	3.8	3.3	2.8		28.0
30.0	3.6	3.3	2.9			3.9	3.5	3.0			4.2	3.7	3.1	2.7		4.0	3.5	3.1	2.7		4.3	3.7	3.2	2.7		30.0
32.0	3.3	3.1	2.8			3.7	3.4	2.9			4.0	3.5	3.0			3.9	3.4	3.0			4.1	3.5	3.1	2.7		32.0
34.0	3.1	3.0	2.7			3.4	3.2	2.8			3.7	3.4	2.9			3.7	3.3	2.9			3.9	3.4	3.0	2.6		34.0
36.0	3.0	2.9				3.2	3.1	2.8			3.5	3.2	2.9			3.5	3.2	2.8			3.5	3.3	2.9			36.0
38.0	2.8	2.8				3.1	2.9	2.7			2.9	3.1	2.8			3.3	3.1	2.8			2.9	3.2	2.9			38.0
40.0	2.7	2.7				2.5	2.7				2.4	2.6	2.7			3.2	3.0	2.7			2.4	2.6	2.8			40.0
44.0						1.6	1.8				1.5	1.6				2.7	2.8				1.5	1.6	1.8			44.0
48.0																2.0	2.1									48.0
52.0																										52.0
56.0																										56.0
60.0																										60.0
64.0																										64.0
68.0																										68.0
72.0																										72.0
1	46	46	46	46	46	92	92	92	92	92	92	92	92	92	92	0	0	0	0	0	92	92	92	92	92	1
2	46	46	46	46	46	46	46	46	46	46	92	92	92	92	92	46	46	46	46	46	92	92	92	92	92	2
3	46	46	46	46	46	46	46	46	46	46	46	46	46	46	46	92	92	92	92	92	92	92	92	92	92	3
4	46	46	46	46	46	46	46	46	46	46	46	46	46	46	46	92	92	92	92	92	46	46	46	46	46	4
5	46	46	46	46	46	46	46	46	46	46	46	46	46	46	46	92	92	92	92	92	46	46	46	46	46	5
ID	49	49	49	49	49	50	50	50	50	50	42	42	42	42	42	21	21	21	21	21	38	38	38	38	38	ID
[DEG]	18~83	33~85	44~85	60~85	74~85	31~83	33~85	43~85	58~85	76~85	39~83	41~85	42~85	59~85	75~85	21~83	34~85	43~85	59~85	75~85	45~83	46~85	48~85	60~85	75~85	[DEG]
	1	1	1	1	1	1	1	1	1	1	1	1	1	1	1	1	1	1	1	1	1	1	1	1	1	
	8.7t	8.7t	8.7t	8.7t	8.7t	8.7t	8.7t	8.7t	8.7t	8.7t	8.7t	8.7t	8.7t	8.7t	8.7t	8.7t	8.7t	8.7t	8.7t	8.7t	8.7t	8.7t	8.7t	8.7t	8.7t	

FLJ	1.6m + 12.4m	25.4 t	8.0m x 7.5m	360 °	JPN

m	47.4	47.4	47.4	47.4	47.4	51.7	51.7	51.7	51.7	51.7	51.7	51.7	51.7	51.7	51.7	56.0	56.0	56.0	56.0	56.0	60.0	60.0	60.0	60.0	60.0	m
°	5	15	30	45	60	5	15	30	45	60	5	15	30	45	60	5	15	30	45	60	5	15	30	45	60	°
3.0																										3.0
3.5																										3.5
4.0																										4.0
4.5																										4.5
5.0																										5.0
6.0																										6.0
7.0																										7.0
8.0																										8.0
9.0																										9.0
10.0	4.3																									10.0
11.0	4.3	4.3				4.3					4.3															11.0
12.0	4.3	4.3				4.3	4.3				4.3	4.3				4.3										12.0
14.0	4.3	4.3	4.1			4.3	4.3				4.3	4.3				4.3	4.3				3.3	3.3				14.0
16.0	4.3	4.3	4.0	3.3		4.3	4.3	3.9			4.3	4.3	3.9			4.3	4.3	3.8			3.3	3.3				16.0
18.0	4.3	4.3	3.8	3.2	2.4	4.3	4.3	3.8	3.2	2.4	4.3	4.3	3.7	3.2	2.4	4.3	4.3	3.7	3.2		3.3	3.3	3.3			18.0
20.0	4.3	4.3	3.7	3.1	2.3	4.3	4.3	3.7	3.1	2.3	4.3	4.3	3.6	3.1	2.3	4.3	4.3	3.6	3.1	2.3	3.3	3.3	3.3	3.1	2.3	20.0
22.0	4.3	4.3	3.5	3.0	2.3	4.3	4.3	3.5	3.0	2.3	4.3	4.2	3.5	3.0	2.3	4.3	4.2	3.5	3.1	2.3	3.3	3.3	3.3	3.0	2.3	22.0
24.0	4.3	4.1	3.4	2.9		4.3	4.1	3.4	2.9		4.3	4.0	3.4	2.9		4.3	4.0	3.4	3.0	2.3	3.3	3.3	3.3	3.0	2.3	24.0
26.0	4.3	3.9	3.3	2.8		4.3	3.9	3.3	2.9		4.3	3.9	3.2	2.9		4.3	3.9	3.2	2.9		3.3	3.3	3.2	2.9		26.0
28.0	4.3	3.8	3.2	2.8		4.3	3.8	3.2	2.8		4.3	3.7	3.2	2.8		4.3	3.7	3.2	2.9		3.3	3.3	3.1	2.8		28.0
30.0	4.2	3.6	3.1	2.7		4.2	3.7	3.1	2.8		4.1	3.6	3.1	2.8		4.1	3.6	3.1	2.8		3.3	3.3	3.0	2.8		30.0
32.0	4.0	3.5	3.0	2.7		4.1	3.5	3.1	2.7		4.0	3.5	3.0	2.7		4.0	3.5	3.0	2.7		3.3	3.3	3.0	2.7		32.0
34.0	3.9	3.4	3.0	2.6		3.9	3.4	3.0	2.7		3.8	3.3	2.9	2.7		3.9	3.4	2.9	2.7		3.3	3.3	2.9	2.7		34.0
36.0	3.7	3.3	2.9			3.6	3.3	2.9	2.6		3.7	3.2	2.9	2.6		3.7	3.3	2.9	2.7		3.3	3.2	2.8	2.6		36.0
38.0	3.4	3.2	2.8			3.0	3.2	2.8			3.6	3.1	2.8			3.2	3.2	2.8	2.6		3.1	3.1	2.8	2.6		38.0
40.0	2.9	3.1	2.8			2.5	2.7	2.8			3.1	3.1	2.7			2.7	2.9	2.7			2.6	2.9	2.7	2.6		40.0
44.0	2.0	2.2	2.4			1.6	1.8	2.0			2.2	2.4	2.6			1.8	2.0	2.2			1.7	1.9	2.2			44.0
48.0	1.3	1.4									1.4	1.6					1.2	1.4					1.3			48.0
52.0																										52.0
56.0																										56.0
60.0																										60.0
64.0																										64.0
68.0																										68.0
72.0																										72.0
1	46	46	46	46	46	92	92	92	92	92	46	46	46	46	46	92	92	92	92	92	100	100	100	100	100	1
2	92	92	92	92	92	92	92	92	92	92	92	92	92	92	92	92	92	92	92	92	100	100	100	100	100	2
3	92	92	92	92	92	92	92	92	92	92	92	92	92	92	92	92	92	92	92	92	100	100	100	100	100	3
4	92	92	92	92	92	92	92	92	92	92	92	92	92	92	92	92	92	92	92	92	100	100	100	100	100	4
5	46	46	46	46	46	46	46	46	46	46	92	92	92	92	92	92	92	92	92	92	100	100	100	100	100	5
ID	31	31	31	31	31	32	32	32	32	32	23	23	23	23	23	24	24	24	24	24	16	16	16	16	16	ID
[DEG]	39~83	40~85	48~85	60~85	75~85	50~83	51~85	53~85	59~85	74~85	45~83	46~85	47~85	59~85	74~85	54~83	50~85	52~85	58~85	74~85	57~83	58~85	56~85	61~85	74~85	[DEG]
	1	1	1	1	1	1	1	1	1	1	1	1	1	1	1	1	1	1	1	1	1	1	1	1	1	
	8.7t	8.7t	8.7t	8.7t	8.7t	8.7t	8.7t	8.7t	8.7t	8.7t	8.7t	8.7t	8.7t	8.7t	8.7t	8.7t	8.7t	8.7t	8.7t	8.7t	8.7t	8.7t	8.7t	8.7t	8.7t	

FLJ	1.6m + 17.4m	25.4 t	8.0m x 7.5m	360 °	JPN

m	12.8	12.8	12.8	12.8	12.8	25.8	25.8	25.8	25.8	25.8	30.1	30.1	30.1	30.1	30.1	30.1	30.1	30.1	30.1	30.1	34.4	34.4	34.4	34.4	34.4	m
°	5	15	30	45	60	5	15	30	45	60	5	15	30	45	60	5	15	30	45	60	5	15	30	45	60	°
3.0																										3.0
3.5																										3.5
4.0																										4.0
4.5																										4.5
5.0	3.3																									5.0
6.0	3.3																									6.0
7.0	3.3																									7.0
8.0	3.3	3.3				3.3					3.3					3.3										8.0
9.0	3.3	3.3				3.3	3.3				3.3					3.3					3.3					9.0
10.0	3.3	3.3				3.3	3.3				3.3	3.3				3.3	3.3				3.3					10.0
11.0	3.3	3.3				3.3	3.3				3.3	3.3				3.3	3.3				3.3	3.3				11.0
12.0	3.3	3.2	2.6			3.3	3.3				3.3	3.3				3.3	3.3				3.3	3.3				12.0
14.0	3.3	2.9	2.4			3.3	3.2	2.6			3.3	3.3	2.7			3.3	3.2	2.6			3.3	3.3				14.0
16.0	2.9	2.6	2.2	1.8		3.3	3.0	2.5			3.3	3.1	2.5			3.3	3.0	2.5			3.3	3.1	2.5			16.0
18.0	2.5	2.3	2.0	1.7		3.3	2.8	2.3	1.9		3.3	2.9	2.4	1.9		3.3	2.9	2.4	1.9		3.3	2.9	2.4	1.9		18.0
20.0	2.3	2.1	1.8	1.6		3.1	2.6	2.2	1.8		3.2	2.7	2.2	1.8	1.5	3.2	2.7	2.2	1.8	1.5	3.3	2.8	2.3	1.8	1.5	20.0
22.0	2.0	1.9	1.7			2.9	2.5	2.0	1.7		3.0	2.6	2.1	1.7	1.5	3.0	2.6	2.1	1.7	1.5	3.1	2.6	2.2	1.8	1.5	22.0
24.0	1.8	1.8	1.6			2.7	2.4	1.9	1.6		2.8	2.5	2.0	1.7		2.8	2.4	2.0	1.7		2.9	2.5	2.1	1.7		24.0
26.0	1.7	1.6				2.5	2.2	1.8	1.6		2.7	2.3	1.9	1.6		2.6	2.3	1.9	1.6		2.7	2.4	2.0	1.6		26.0
28.0	1.5					2.3	2.1	1.7	1.5		2.5	2.2	1.8	1.6		2.5	2.2	1.8	1.6		2.6	2.3	1.9	1.6		28.0
30.0						2.1	1.9	1.7			2.4	2.1	1.7	1.5		2.4	2.1	1.7	1.5		2.5	2.2	1.8	1.5		30.0
32.0						2.0	1.8	1.6			2.2	2.0	1.7			2.2	2.0	1.7			2.4	2.1	1.7	1.5		32.0
34.0						1.8	1.7				2.0	1.9	1.6			2.0	1.9	1.6			2.3	2.0	1.7			34.0
36.0						1.7	1.7				1.9	1.8	1.6			1.9	1.8	1.6			2.1	1.9	1.6			36.0
38.0						1.6	1.6				1.8	1.7				1.8	1.7				2.0	1.8	1.6			38.0
40.0						1.5					1.7	1.6				1.7	1.6				1.9	1.7				40.0
44.0											1.5					1.5					1.7	1.6				44.0
48.0																					1.3					48.0
52.0																										52.0
56.0																										56.0
60.0																										60.0
64.0																										64.0
68.0																										68.0
72.0																										72.0
1	0	0	0	0		46	46	46	46		92	92	92	92	92	46	46	46	46	46	92	92	92	92	92	1
2	0	0	0	0		46	46	46	46		46	46	46	46	46	46	46	46	46	46	46	46	46	46	46	2
3	0	0	0	0		46	46	46	46		46	46	46	46	46	46	46	46	46	46	46	46	46	46	46	3
4	0	0	0	0		0	0	0	0		0	0	0	0	0	46	46	46	46	46	46	46	46	46	46	4
5	0	0	0	0		0	0	0	0		0	0	0	0	0	0	0	0	0	0	0	0	0	0	0	5
ID	1	1	1	1		66	66	66	66		67	67	67	67	67	54	54	54	54	54	55	55	55	55	55	ID
[DEG]	0~83	0~85	0~85	0~85		20~83	30~85	44~85	60~85		21~83	35~85	43~85	57~85	73~85	21~83	35~85	43~85	57~85	73~85	22~83	35~85	46~85	58~85	75~85	[DEG]
	1	1	1	1		1	1	1	1		1	1	1	1	1	1	1	1	1	1	1	1	1	1	1	
	8.7t	8.7t	8.7t	8.7t		8.7t	8.7t	8.7t	8.7t		8.7t	8.7t	8.7t	8.7t	8.7t	8.7t	8.7t	8.7t	8.7t	8.7t	8.7t	8.7t	8.7t	8.7t	8.7t	

フルオートラフィングジブ

FLJ	1.6m + 17.4m	25.4 t	8.0m x 7.5m	360 °	JPN

m	34.4	34.4	34.4	34.4	34.4	38.7	38.7	38.7	38.7	38.7	43.0	43.0	43.0	43.0	43.0	43.0	43.0	43.0	43.0	43.0	47.4	47.4	47.4	47.4	47.4	m
°	5	15	30	45	60	5	15	30	45	60	5	15	30	45	60	5	15	30	45	60	5	15	30	45	60	°
3.0																										3.0
3.5																										3.5
4.0																										4.0
4.5																										4.5
5.0																										5.0
6.0																										6.0
7.0																										7.0
8.0																										8.0
9.0	3.3																									9.0
10.0	3.3					3.3																				10.0
11.0	3.3	3.3				3.3					3.3					2.9										11.0
12.0	3.3	3.3				3.3	3.3				3.3	3.3				2.9					3.2					12.0
14.0	3.3	3.2				3.3	3.3				3.3	3.2				2.9	2.9				3.2	3.2				14.0
16.0	3.3	3.0	2.5			3.3	3.1	2.5			3.3	3.1				2.9	2.9				3.2	3.1				16.0
18.0	3.3	2.9	2.4	1.9		3.3	2.9	2.4			3.3	2.9	2.4			2.9	2.8	2.3			3.2	2.9	2.4			18.0
20.0	3.2	2.7	2.3	1.8	1.5	3.3	2.8	2.3	1.9		3.3	2.8	2.3	1.9		2.9	2.7	2.2	1.9		3.2	2.8	2.3			20.0
22.0	3.0	2.6	2.2	1.8	1.5	3.1	2.6	2.2	1.8	1.5	3.1	2.7	2.2	1.8	1.5	2.9	2.6	2.2	1.8	1.5	3.1	2.7	2.2	1.8		22.0
24.0	2.9	2.5	2.1	1.7		2.9	2.5	2.1	1.7	1.5	3.0	2.5	2.1	1.8	1.5	2.9	2.5	2.1	1.8	1.5	3.0	2.5	2.1	1.8	1.5	24.0
26.0	2.7	2.4	2.0	1.6		2.8	2.4	2.1	1.7		2.8	2.4	2.1	1.7		2.7	2.4	2.0	1.7		2.9	2.4	2.1	1.7	1.4	26.0
28.0	2.6	2.3	1.9	1.6		2.7	2.3	2.0	1.6		2.7	2.3	2.0	1.6		2.6	2.3	2.0	1.6		2.7	2.4	2.0	1.7		28.0
30.0	2.5	2.2	1.8	1.5		2.5	2.2	1.9	1.6		2.6	2.3	1.9	1.6		2.5	2.2	1.9	1.6		2.6	2.3	1.9	1.6		30.0
32.0	2.4	2.1	1.7	1.5		2.4	2.1	1.8	1.5		2.5	2.2	1.9	1.6		2.4	2.1	1.8	1.6		2.5	2.2	1.9	1.6		32.0
34.0	2.3	2.0	1.7			2.3	2.1	1.7	1.5		2.4	2.1	1.8	1.5		2.3	2.0	1.8	1.5		2.4	2.1	1.8	1.6		34.0
36.0	2.1	1.9	1.6			2.2	2.0	1.7			2.3	2.0	1.7	1.5		2.2	2.0	1.7	1.5		2.3	2.0	1.8	1.5		36.0
38.0	2.0	1.8	1.6			2.2	1.9	1.6			2.2	2.0	1.7			2.2	1.9	1.7			2.2	2.0	1.7	1.5		38.0
40.0	1.9	1.7				2.0	1.9	1.6			2.1	1.9	1.6			2.1	1.9	1.6			2.2	1.9	1.7			40.0
44.0	1.7	1.6				1.8	1.7				2.0	1.8	1.6			2.0	1.8	1.6			2.0	1.8	1.6			44.0
48.0	1.5					1.5	1.6				1.3	1.5				1.8	1.7				1.3	1.5	1.5			48.0
52.0																1.7	1.6									52.0
56.0																1.3										56.0
60.0																										60.0
64.0																										64.0
68.0																										68.0
72.0																										72.0
1	46	46	46	46	46	92	92	92	92	92	92	92	92	92	92	0	0	0	0	0	92	92	92	92	92	1
2	46	46	46	46	46	46	46	46	46	46	92	92	92	92	92	46	46	46	46	46	92	92	92	92	92	2
3	46	46	46	46	46	46	46	46	46	46	46	46	46	46	46	92	92	92	92	92	92	92	92	92	92	3
4	46	46	46	46	46	46	46	46	46	46	46	46	46	46	46	92	92	92	92	92	46	46	46	46	46	4
5	46	46	46	46	46	46	46	46	46	46	46	46	46	46	46	92	92	92	92	92	46	46	46	46	46	5
ID	49	49	49	49	49	50	50	50	50	50	42	42	42	42	42	21	21	21	21	21	38	38	38	38	38	ID
[DEG]	22~83	35~85	46~85	58~85	75~85	33~83	35~85	44~85	59~85	74~85	40~83	42~85	44~85	57~85	74~85	24~83	25~85	44~85	58~85	74~85	45~83	47~85	49~85	61~85	73~85	[DEG]
	1	1	1	1	1	1	1	1	1	1	1	1	1	1	1	1	1	1	1	1	1	1	1	1	1	
	8.7t	8.7t	8.7t	8.7t	8.7t	8.7t	8.7t	8.7t	8.7t	8.7t	8.7t	8.7t	8.7t	8.7t	8.7t	8.7t	8.7t	8.7t	8.7t	8.7t	8.7t	8.7t	8.7t	8.7t	8.7t	

m	47.4	47.4	47.4	47.4	47.4	51.7	51.7	51.7	51.7	51.7	51.7	51.7	51.7	51.7	51.7	56.0	56.0	56.0	56.0	56.0	60.0	60.0	60.0	60.0	60.0	m
°	5	15	30	45	60	5	15	30	45	60	5	15	30	45	60	5	15	30	45	60	5	15	30	45	60	°
3.0																										3.0
3.5																										3.5
4.0																										4.0
4.5																										4.5
5.0																										5.0
6.0																										6.0
7.0																										7.0
8.0																										8.0
9.0																										9.0
10.0																										10.0
11.0																										11.0
12.0	3.1																									12.0
14.0	3.1	3.1				3.2	3.1				3.2	3.0				2.9										14.0
16.0	3.1	3.0				3.2	3.0				3.1	2.9				2.9	2.9				2.8	2.7				16.0
18.0	3.1	2.9	2.4			3.2	2.9				3.1	2.8				2.9	2.8				2.8	2.6				18.0
20.0	3.1	2.7	2.3			3.1	2.7	2.3			3.0	2.7	2.2			2.9	2.7	2.2			2.8	2.6				20.0
22.0	3.1	2.6	2.2	1.8		3.1	2.6	2.2	1.8		2.9	2.6	2.2	1.8		2.9	2.6	2.2			2.7	2.5	2.1			22.0
24.0	2.9	2.5	2.1	1.8	1.5	2.9	2.5	2.1	1.8	1.5	2.9	2.5	2.1	1.8	1.5	2.8	2.5	2.1	1.8		2.7	2.5	2.1	1.8		24.0
26.0	2.8	2.4	2.0	1.7	1.4	2.8	2.4	2.1	1.7	1.4	2.8	2.4	2.0	1.7	1.4	2.8	2.4	2.0	1.8	1.4	2.6	2.4	2.0	1.8	1.4	26.0
28.0	2.7	2.3	2.0	1.7		2.7	2.3	2.0	1.7	1.4	2.7	2.3	2.0	1.7	1.4	2.7	2.3	2.0	1.7	1.4	2.6	2.3	2.0	1.7	1.4	28.0
30.0	2.6	2.2	1.9	1.6		2.6	2.3	1.9	1.6		2.6	2.2	1.9	1.6		2.6	2.2	1.9	1.7		2.5	2.2	1.9	1.7	1.4	30.0
32.0	2.5	2.2	1.9	1.6		2.5	2.2	1.9	1.6		2.5	2.2	1.9	1.6		2.5	2.2	1.9	1.6		2.5	2.2	1.8	1.6		32.0
34.0	2.4	2.1	1.8	1.6		2.4	2.1	1.8	1.6		2.4	2.1	1.8	1.6		2.4	2.1	1.8	1.6		2.4	2.1	1.8	1.6		34.0
36.0	2.3	2.0	1.8	1.5		2.3	2.0	1.8	1.5		2.3	2.0	1.7	1.5		2.3	2.0	1.8	1.6		2.3	2.0	1.7	1.6		36.0
38.0	2.2	2.0	1.7	1.5		2.3	2.0	1.7	1.5		2.2	2.0	1.7	1.5		2.2	2.0	1.7	1.5		2.2	2.0	1.7	1.5		38.0
40.0	2.1	1.9	1.7			2.2	1.9	1.7	1.5		2.1	1.9	1.7	1.5		2.2	1.9	1.7	1.5		2.2	1.9	1.7	1.5		40.0
44.0	2.0	1.8	1.6			2.1	1.8	1.6			2.0	1.8	1.6			2.0	1.8	1.6			2.0	1.8	1.6	1.5		44.0
48.0	1.8	1.7	1.5			1.4	1.6	1.6			1.9	1.7	1.5			1.5	1.7	1.5			1.4	1.7	1.5			48.0
52.0		1.3									1.3	1.4	1.5					1.3					1.3			52.0
56.0																										56.0
60.0																										60.0
64.0																										64.0
68.0																										68.0
72.0																										72.0
1	46	46	46	46	46	92	92	92	92	92	46	46	46	46	46	92	92	92	92	92	100	100	100	100	100	1
2	92	92	92	92	92	92	92	92	92	92	92	92	92	92	92	92	92	92	92	92	100	100	100	100	100	2
3	92	92	92	92	92	92	92	92	92	92	92	92	92	92	92	92	92	92	92	92	100	100	100	100	100	3
4	92	92	92	92	92	92	92	92	92	92	92	92	92	92	92	92	92	92	92	92	100	100	100	100	100	4
5	46	46	46	46	46	46	46	46	46	46	92	92	92	92	92	92	92	92	92	92	100	100	100	100	100	5
ID	31	31	31	31	31	32	32	32	32	32	23	23	23	23	23	24	24	24	24	24	16	16	16	16	16	ID
[DEG]	45~83	41~85	43~85	61~85	73~85	50~83	52~85	54~85	60~85	73~85	45~83	47~85	49~85	60~85	73~85	54~83	56~85	53~85	58~85	73~85	57~83	59~85	57~85	58~85	73~85	[DEG]
	1	1	1	1	1	1	1	1	1	1	1	1	1	1	1	1	1	1	1	1	1	1	1	1	1	
	8.7t	8.7t	8.7t	8.7t	8.7t	8.7t	8.7t	8.7t	8.7t	8.7t	8.7t	8.7t	8.7t	8.7t	8.7t	8.7t	8.7t	8.7t	8.7t	8.7t	8.7t	8.7t	8.7t	8.7t	8.7t	

FLJ	1.6m + 7.4m	25.4 t	8.0m x 6.2m	360 °	JPN

m	12.8	12.8	12.8	12.8	12.8	25.8	25.8	25.8	25.8	25.8	30.1	30.1	30.1	30.1	30.1	30.1	30.1	30.1	30.1	30.1	34.4	34.4	34.4	34.4	34.4	m
°	5	15	30	45	60	5	15	30	45	60	5	15	30	45	60	5	15	30	45	60	5	15	30	45	60	°
3.0	7.3																									3.0
3.5	7.3	7.3																								3.5
4.0	7.3	7.3				7.3																				4.0
4.5	7.3	7.3				7.3																				4.5
5.0	7.3	7.3				7.3	7.3				7.3					7.3										5.0
6.0	7.3	7.3	7.3			7.3	7.3				7.3	7.3				7.3	7.3				7.3	7.3				6.0
7.0	7.3	7.3	7.3	5.9		7.3	7.3	7.3			7.3	7.3	7.3			7.3	7.3	7.3			7.3	7.3				7.0
8.0	7.3	7.3	7.0	5.7		7.3	7.3	7.3	6.2		7.3	7.3	7.3			7.3	7.3	7.3			7.3	7.3	7.3			8.0
9.0	7.3	7.3	6.6	5.5		7.3	7.3	7.3	6.0	4.5	7.3	7.3	7.3	6.1		7.3	7.3	7.3	6.1		7.3	7.3	7.3	6.2		9.0
10.0	7.3	7.3	6.3	5.4		7.3	7.3	7.3	5.9	4.5	7.3	7.3	7.3	6.0	4.5	7.3	7.3	7.3	6.0	4.5	7.3	7.3	7.3	6.1	4.5	10.0
11.0	7.3	7.0	6.1	5.2		7.3	7.3	7.3	5.8	4.4	7.3	7.3	7.3	5.9	4.5	7.3	7.3	7.3	5.9	4.5	7.3	7.3	7.3	6.0	4.5	11.0
12.0	7.1	6.5	5.8			7.3	7.3	7.0	5.6		7.3	7.3	7.3	5.8	4.4	7.3	7.3	7.3	5.8	4.4	7.3	7.3	7.3	5.9	4.4	12.0
14.0	6.1	5.9	5.4			7.3	7.3	6.6	5.4		7.3	7.3	6.9	5.6		7.3	7.3	6.9	5.6		7.3	7.3	7.2	5.7	4.4	14.0
16.0	5.4	5.3				7.3	7.3	6.2	5.2		7.3	7.3	6.5	5.4		7.3	7.3	6.5	5.4		7.3	7.3	6.8	5.5		16.0
18.0	4.9					7.3	6.9	5.9	5.1		7.3	7.3	6.2	5.2		7.3	7.3	6.2	5.2		7.3	7.3	6.5	5.3		18.0
20.0						7.1	6.4	5.7			7.3	7.0	5.9	5.1		7.3	7.0	5.9	5.1		7.3	7.3	6.2	5.2		20.0
22.0						6.5	6.0	5.4			7.0	6.6	5.7			7.3	6.6	5.7			7.3	7.1	6.0	5.1		22.0
24.0						6.0	5.7	5.3			5.6	5.9	5.5			6.5	6.2	5.5			5.9	6.2	5.7			24.0
26.0						5.1	5.2				4.5	4.7	5.0			5.3	5.5	5.3			4.8	5.0	5.3			26.0
28.0						4.1	4.3				3.6	3.8				4.4	4.5				3.9	4.1	4.3			28.0
30.0						3.3					2.8	2.9				3.6	3.7				3.1	3.3	3.4			30.0
32.0											2.1	2.2				2.9	3.0				2.4	2.5				32.0
34.0											1.4					2.3					1.7	1.9				34.0
36.0																						1.3				36.0
38.0																										38.0
40.0																										40.0
44.0																										44.0
48.0																										48.0
52.0																										52.0
56.0																										56.0
60.0																										60.0
64.0																										64.0
68.0																										68.0
72.0																										72.0
1	0	0	0	0		46	46	46	46	46	92	92	92	92	92	46	46	46	46	46	92	92	92	92	92	1
2	0	0	0	0		46	46	46	46	46	46	46	46	46	46	46	46	46	46	46	46	46	46	46	46	2
3	0	0	0	0		46	46	46	46	46	46	46	46	46	46	46	46	46	46	46	46	46	46	46	46	3
4	0	0	0	0		0	0	0	0	0	0	0	0	0	0	46	46	46	46	46	46	46	46	46	46	4
5	0	0	0	0		0	0	0	0	0	0	0	0	0	0	0	0	0	0	0	0	0	0	0	0	5
ID	1	1	1	1		66	66	66	66	66	67	67	67	67	67	54	54	54	54	54	55	55	55	55	55	ID
[DEG]	0~83	0~85	0~85	0~85		22~83	31~85	45~85	61~85	74~85	22~83	31~85	43~85	62~85	77~85	22~83	31~85	43~85	61~85	77~85	35~83	30~85	46~85	59~85	76~85	[DEG]
	1	1	1	1		1	1	1	1	1	1	1	1	1	1	1	1	1	1	1	1	1	1	1	1	
	8.7t	8.7t	8.7t	8.7t		8.7t	8.7t	8.7t	8.7t	8.7t	8.7t	8.7t	8.7t	8.7t	8.7t	8.7t	8.7t	8.7t	8.7t	8.7t	8.7t	8.7t	8.7t	8.7t	8.7t	

m	34.4	34.4	34.4	34.4	34.4	38.7	38.7	38.7	38.7	38.7	43.0	43.0	43.0	43.0	43.0	43.0	43.0	43.0	43.0	43.0	47.4	47.4	47.4	47.4	47.4	m
°	5	15	30	45	60	5	15	30	45	60	5	15	30	45	60	5	15	30	45	60	5	15	30	45	60	°
3.0																										3.0
3.5																										3.5
4.0																										4.0
4.5																										4.5
5.0																										5.0
6.0	7.3	7.3																								6.0
7.0	7.3	7.3				7.3	7.3																			7.0
8.0	7.3	7.3	7.3			7.3	7.3				7.3	7.3				7.3	7.3					7.3				8.0
9.0	7.3	7.3	7.3	6.2		7.3	7.3	7.3			7.3	7.3	7.3			7.3	7.3				7.3	7.3				9.0
10.0	7.3	7.3	7.3	6.1	4.5	7.3	7.3	7.3	6.2		7.3	7.3	7.3			7.3	7.3	7.3			7.3	7.3	7.3			10.0
11.0	7.3	7.3	7.3	6.0	4.5	7.3	7.3	7.3	6.1	4.5	7.3	7.3	7.3	6.1	4.5	7.3	7.3	7.3	6.1		7.3	7.3	7.3			11.0
12.0	7.3	7.3	7.3	5.9	4.4	7.3	7.3	7.3	6.0	4.5	7.3	7.3	7.3	6.0	4.5	7.3	7.3	7.3	6.0	4.5	7.3	7.3	7.3	6.1	4.5	12.0
14.0	7.3	7.3	7.2	5.7	4.4	7.3	7.3	7.3	5.8	4.4	7.3	7.3	7.3	5.8	4.4	7.3	7.3	7.3	5.8	4.4	7.3	7.3	7.3	5.9	4.4	14.0
16.0	7.3	7.3	6.8	5.5		7.3	7.3	7.0	5.6		7.3	7.3	7.3	5.7	4.4	7.3	7.3	7.3	5.7	4.4	7.3	7.3	7.3	5.8	4.4	16.0
18.0	7.3	7.3	6.5	5.3		7.3	7.3	6.7	5.4		7.3	7.3	6.9	5.5		7.3	7.3	6.9	5.5		7.3	7.3	7.1	5.6		18.0
20.0	7.3	7.3	6.2	5.2		7.3	7.3	6.4	5.3		7.3	7.3	6.7	5.4		7.3	7.3	6.7	5.4		7.3	7.3	6.9	5.5		20.0
22.0	7.3	7.1	6.0	5.1		7.3	7.3	6.2	5.2		7.3	7.3	6.4	5.3		7.3	7.3	6.4	5.3		7.3	7.3	6.6	5.4		22.0
24.0	6.8	6.7	5.7			6.3	6.6	6.0	5.1		6.2	6.5	6.2	5.2		6.8	6.7	6.2	5.2		6.2	6.5	6.4	5.3		24.0
26.0	5.7	5.9	5.6			5.2	5.4	5.7			5.1	5.3	5.6	5.1		6.2	6.1	6.0	5.1		5.1	5.4	5.7	5.2		26.0
28.0	4.7	4.9	5.1			4.2	4.4	4.7			4.1	4.3	4.6			5.5	5.6	5.6			4.2	4.4	4.7	4.9		28.0
30.0	3.9	4.1	4.2			3.4	3.6	3.8			3.3	3.5	3.7			4.7	4.8	5.0			3.4	3.6	3.8			30.0
32.0	3.2	3.4				2.8	2.9	3.1			2.6	2.8	3.0			4.0	4.1	4.3			2.7	2.9	3.1			32.0
34.0	2.6	2.7				2.1	2.3				2.0	2.2	2.3			3.4	3.5	3.6			2.0	2.2	2.4			34.0
36.0	2.1	2.2				1.6	1.7				1.4	1.6	1.7			2.8	2.9	3.1			1.5	1.6	1.8			36.0
38.0	1.6															2.4	2.5									38.0
40.0																1.9	2.0									40.0
44.0																										44.0
48.0																										48.0
52.0																										52.0
56.0																										56.0
60.0																										60.0
64.0																										64.0
68.0																										68.0
72.0																										72.0
1	46	46	46	46	46	92	92	92	92	92	92	92	92	92	92	0	0	0	0	0	92	92	92	92	92	1
2	46	46	46	46	46	46	46	46	46	46	92	92	92	92	92	46	46	46	46	46	92	92	92	92	92	2
3	46	46	46	46	46	46	46	46	46	46	46	46	46	46	46	92	92	92	92	92	92	92	92	92	92	3
4	46	46	46	46	46	46	46	46	46	46	46	46	46	46	46	92	92	92	92	92	46	46	46	46	46	4
5	46	46	46	46	46	46	46	46	46	46	46	46	46	46	46	92	92	92	92	92	46	46	46	46	46	5
ID	49	49	49	49	49	50	50	50	50	50	42	42	42	42	42	21	21	21	21	21	38	38	38	38	38	ID
[DEG]	23~83	30~85	46~85	59~85	75~85	38~83	40~85	45~85	60~85	75~85	45~83	46~85	47~85	61~85	74~85	39~83	30~85	44~85	61~85	74~85	50~83	51~85	52~85	59~85	74~85	[DEG]
	1	1	1	1	1	1	1	1	1	1	1	1	1	1	1	1	1	1	1	1	1	1	1	1	1	
	8.7t	8.7t	8.7t	8.7t	8.7t	8.7t	8.7t	8.7t	8.7t	8.7t	8.7t	8.7t	8.7t	8.7t	8.7t	8.7t	8.7t	8.7t	8.7t	8.7t	8.7t	8.7t	8.7t	8.7t	8.7t	

フルオートラフィングジブ

FLJ	1.6m + 7.4m	25.4 t	8.0m x 6.2m	360 °	JPN

m	47.4	47.4	47.4	47.4	47.4	51.7	51.7	51.7	51.7	51.7	51.7	51.7	51.7	51.7	51.7	56.0	56.0	56.0	56.0	56.0	60.0	60.0	60.0	60.0	60.0	m
°	5	15	30	45	60	5	15	30	45	60	5	15	30	45	60	5	15	30	45	60	5	15	30	45	60	°
3.0																										3.0
3.5																										3.5
4.0																										4.0
4.5																										4.5
5.0																										5.0
6.0																										6.0
7.0																										7.0
8.0		7.3																								8.0
9.0	7.3	7.3					7.3					6.4														9.0
10.0	7.3	7.3	7.3			7.3	7.3				6.4	6.4					6.3									10.0
11.0	7.3	7.3	7.3			7.3	7.3	7.3			6.4	6.4	6.4			6.3	6.3					5.3				11.0
12.0	7.3	7.3	7.3	6.1	4.5	7.3	7.3	7.3			6.4	6.4	6.4			6.3	6.3	6.3			5.3	5.3				12.0
14.0	7.3	7.3	7.3	5.9	4.4	7.3	7.3	7.3	6.0	4.5	6.4	6.4	6.4	6.0	4.5	6.3	6.3	6.3	6.0	4.5	5.3	5.3	5.3			14.0
16.0	7.3	7.3	7.3	5.8	4.4	7.3	7.3	7.3	5.8	4.4	6.4	6.4	6.4	5.8	4.4	6.3	6.3	6.3	5.9	4.4	5.3	5.3	5.3	5.3	4.4	16.0
18.0	7.3	7.3	7.1	5.6		7.3	7.3	7.3	5.7	4.3	6.4	6.4	6.4	5.7	4.3	6.3	6.3	6.3	5.7	4.4	5.3	5.3	5.3	5.3	4.4	18.0
20.0	7.3	7.3	6.9	5.5		7.3	7.3	7.0	5.5		6.4	6.4	6.4	5.5		6.3	6.3	6.3	5.6		5.3	5.3	5.3	5.3	4.3	20.0
22.0	7.3	7.3	6.6	5.4		7.3	7.3	6.8	5.4		6.4	6.4	6.4	5.4		6.3	6.3	6.3	5.5		5.3	5.3	5.3	5.3		22.0
24.0	6.8	7.1	6.4	5.3		6.4	6.7	6.5	5.3		6.4	6.4	6.4	5.3		6.3	6.3	6.3	5.4		5.3	5.3	5.3	5.3		24.0
26.0	5.7	5.9	6.2	5.2		5.3	5.5	5.8	5.2		5.9	6.1	6.3	5.2		5.5	5.7	6.1	5.3		5.3	5.3	5.1	5.0		26.0
28.0	4.7	4.9	5.2	5.1		4.3	4.6	4.8	5.0		4.9	5.1	5.4	5.2		4.6	4.8	5.1	5.2		4.5	4.8	4.8	4.7		28.0
30.0	3.9	4.1	4.3			3.5	3.7	4.0	4.2		4.1	4.3	4.5	4.7		3.8	4.0	4.2	4.4		3.7	3.9	4.2	4.4		30.0
32.0	3.2	3.4	3.6			2.8	3.0	3.2			3.4	3.6	3.8			3.1	3.2	3.5	3.6		3.0	3.2	3.5	3.6		32.0
34.0	2.6	2.8	2.9			2.2	2.4	2.6			2.8	3.0	3.2			2.5	2.6	2.8			2.4	2.6	2.8	3.0		34.0
36.0	2.1	2.2	2.4			1.6	1.8	2.0			2.3	2.4	2.6			1.9	2.0	2.2			1.8	2.0	2.2			36.0
38.0	1.6	1.7	1.8					1.4			1.8	1.9	2.1				1.5	1.7				1.5	1.7			38.0
40.0		1.2									1.3	1.5	1.6													40.0
44.0																										44.0
48.0																										48.0
52.0																										52.0
56.0																										56.0
60.0																										60.0
64.0																										64.0
68.0																										68.0
72.0																										72.0
1	46	46	46	46	46	92	92	92	92	92	46	46	46	46	46	92	92	92	92	92	100	100	100	100	100	1
2	92	92	92	92	92	92	92	92	92	92	92	92	92	92	92	92	92	92	92	92	100	100	100	100	100	2
3	92	92	92	92	92	92	92	92	92	92	92	92	92	92	92	92	92	92	92	92	100	100	100	100	100	3
4	92	92	92	92	92	92	92	92	92	92	92	92	92	92	92	92	92	92	92	92	100	100	100	100	100	4
5	46	46	46	46	46	46	46	46	46	46	92	92	92	92	92	92	92	92	92	92	100	100	100	100	100	5
ID	31	31	31	31	31	32	32	32	32	32	23	23	23	23	23	24	24	24	24	24	16	16	16	16	16	ID
[DEG]	47~83	45~85	46~85	59~85	74~85	54~83	55~85	54~85	60~85	74~85	49~83	50~85	51~85	60~85	74~85	58~83	57~85	58~85	58~85	74~85	61~83	60~85	61~85	61~85	74~85	[DEG]
	1	1	1	1	1	1	1	1	1	1	1	1	1	1	1	1	1	1	1	1	1	1	1	1	1	
	8.7t	8.7t	8.7t	8.7t	8.7t	8.7t	8.7t	8.7t	8.7t	8.7t	8.7t	8.7t	8.7t	8.7t	8.7t	8.7t	8.7t	8.7t	8.7t	8.7t	8.7t	8.7t	8.7t	8.7t	8.7t	

FLJ	1.6m + 12.4m	25.4 t	8.0m x 6.2m	360 °	JPN

m	12.8	12.8	12.8	12.8	12.8	25.8	25.8	25.8	25.8	25.8	30.1	30.1	30.1	30.1	30.1	30.1	30.1	30.1	30.1	30.1	34.4	34.4	34.4	34.4	34.4	m
°	5	15	30	45	60	5	15	30	45	60	5	15	30	45	60	5	15	30	45	60	5	15	30	45	60	°
3.0																										3.0
3.5	4.3																									3.5
4.0	4.3																									4.0
4.5	4.3																									4.5
5.0	4.3																									5.0
6.0	4.3	4.3				4.3																				6.0
7.0	4.3	4.3				4.3	4.3				4.3					4.3										7.0
8.0	4.3	4.3				4.3	4.3				4.3	4.3				4.3	4.3				4.3	4.3				8.0
9.0	4.3	4.3	4.3			4.3	4.3				4.3	4.3				4.3	4.3				4.3	4.3				9.0
10.0	4.3	4.3	4.1			4.3	4.3	4.3			4.3	4.3				4.3	4.3				4.3	4.3				10.0
11.0	4.3	4.3	3.9	3.2		4.3	4.3	4.3			4.3	4.3	4.3			4.3	4.3	4.3			4.3	4.3	4.3			11.0
12.0	4.3	4.3	3.7	3.1		4.3	4.3	4.3	3.3		4.3	4.3	4.3			4.3	4.3	4.3			4.3	4.3	4.3			12.0
14.0	4.1	3.8	3.4	2.9		4.3	4.3	4.0	3.2	2.4	4.3	4.3	4.2	3.2	2.4	4.3	4.3	4.2	3.2	2.4	4.3	4.3	4.3	3.3		14.0
16.0	3.6	3.4	3.1	2.7		4.3	4.3	3.7	3.0	2.4	4.3	4.3	3.9	3.1	2.4	4.3	4.3	3.9	3.1	2.4	4.3	4.3	4.0	3.1	2.4	16.0
18.0	3.2	3.1	2.9			4.3	4.2	3.5	2.9		4.3	4.3	3.7	3.0		4.3	4.3	3.7	3.0		4.3	4.3	3.8	3.0	2.3	18.0
20.0	2.9	2.9				4.3	3.9	3.3	2.8		4.3	4.2	3.5	2.9		4.3	4.2	3.5	2.9		4.3	4.3	3.6	2.9		20.0
22.0	2.6	2.7				4.0	3.6	3.1	2.7		4.3	3.9	3.3	2.8		4.3	3.9	3.3	2.8		4.3	4.2	3.4	2.8		22.0
24.0						3.7	3.4	3.0			4.1	3.7	3.1	2.7		4.1	3.7	3.1	2.7		4.3	3.9	3.3	2.8		24.0
26.0						3.4	3.2	2.9			3.8	3.4	3.0			3.8	3.4	3.0			4.1	3.7	3.1	2.7		26.0
28.0						3.1	3.0	2.8			3.5	3.3	2.9			3.5	3.3	2.9			3.8	3.5	3.0			28.0
30.0						2.9	2.8				3.2	3.1	2.8			3.2	3.1	2.8			3.6	3.3	2.9			30.0
32.0						2.7	2.7				3.0	2.9	2.7			3.0	2.9	2.7			3.2	3.1	2.8			32.0
34.0						2.5					2.4	2.6				2.8	2.8				2.6	2.8	2.7			34.0
36.0											1.9	2.0				2.6	2.7				2.0	2.3				36.0
38.0											1.3					2.1					1.5	1.7				38.0
40.0																										40.0
44.0																										44.0
48.0																										48.0
52.0																										52.0
56.0																										56.0
60.0																										60.0
64.0																										64.0
68.0																										68.0
72.0																										72.0
1	0	0	0	0		46	46	46	46	46	92	92	92	92	92	46	46	46	46	46	92	92	92	92	92	1
2	0	0	0	0		46	46	46	46	46	46	46	46	46	46	46	46	46	46	46	46	46	46	46	46	2
3	0	0	0	0		46	46	46	46	46	46	46	46	46	46	46	46	46	46	46	46	46	46	46	46	3
4	0	0	0	0		0	0	0	0	0	0	0	0	0	0	46	46	46	46	46	46	46	46	46	46	4
5	0	0	0	0		0	0	0	0	0	0	0	0	0	0	0	0	0	0	0	0	0	0	0	0	5
ID	1	1	1	1		66	66	66	66	66	67	67	67	67	67	54	54	54	54	54	55	55	55	55	55	ID
[DEG]	0~83	0~85	0~85	0~85		25~83	27~85	47~85	58~85	76~85	25~83	27~85	46~85	59~85	75~85	17~83	27~85	45~85	59~85	75~85	36~83	38~85	44~85	60~85	74~85	[DEG]
	1	1	1	1		1	1	1	1	1	1	1	1	1	1	1	1	1	1	1	1	1	1	1	1	
	8.7t	8.7t	8.7t	8.7t		8.7t	8.7t	8.7t	8.7t	8.7t	8.7t	8.7t	8.7t	8.7t	8.7t	8.7t	8.7t	8.7t	8.7t	8.7t	8.7t	8.7t	8.7t	8.7t	8.7t	

FLJ	1.6m + 12.4m	25.4 t	8.0m x 6.2m	360 °	JPN

m	34.4	34.4	34.4	34.4	34.4	38.7	38.7	38.7	38.7	38.7	43.0	43.0	43.0	43.0	43.0	43.0	43.0	43.0	43.0	43.0	47.4	47.4	47.4	47.4	47.4	m
°	5	15	30	45	60	5	15	30	45	60	5	15	30	45	60	5	15	30	45	60	5	15	30	45	60	°
3.0																										3.0
3.5																										3.5
4.0																										4.0
4.5																										4.5
5.0																										5.0
6.0																										6.0
7.0	4.3																									7.0
8.0	4.3	4.3				4.3																				8.0
9.0	4.3	4.3				4.3	4.3				4.3					4.3										9.0
10.0	4.3	4.3				4.3	4.3				4.3	4.3				4.3	4.3				4.3					10.0
11.0	4.3	4.3	4.3			4.3	4.3				4.3	4.3				4.3	4.3				4.3	4.3				11.0
12.0	4.3	4.3	4.3			4.3	4.3	4.3			4.3	4.3				4.3	4.3				4.3	4.3				12.0
14.0	4.3	4.3	4.2	3.3		4.3	4.3	4.2	3.3		4.3	4.3	4.2			4.3	4.3	4.1			4.3	4.3	4.2			14.0
16.0	4.3	4.3	4.0	3.1	2.4	4.3	4.3	4.0	3.2	2.4	4.3	4.3	4.0	3.2	2.4	4.3	4.3	3.9	3.2		4.3	4.3	4.0	3.3		16.0
18.0	4.3	4.3	3.8	3.0	2.3	4.3	4.3	3.9	3.1	2.3	4.3	4.3	3.9	3.1	2.4	4.3	4.3	3.7	3.1	2.4	4.3	4.3	3.8	3.2	2.4	18.0
20.0	4.3	4.3	3.6	2.9		4.3	4.3	3.7	3.0	2.3	4.3	4.3	3.7	3.0	2.3	4.3	4.3	3.6	3.0	2.3	4.3	4.3	3.7	3.1	2.3	20.0
22.0	4.3	4.2	3.4	2.8		4.3	4.3	3.6	2.9		4.3	4.3	3.6	2.9		4.3	4.2	3.5	2.9		4.3	4.3	3.6	3.0	2.3	22.0
24.0	4.3	3.9	3.3	2.8		4.3	4.1	3.4	2.8		4.3	4.2	3.5	2.9		4.3	4.0	3.4	2.9		4.3	4.2	3.4	2.9		24.0
26.0	4.1	3.7	3.1	2.7		4.3	3.9	3.3	2.7		4.3	4.0	3.4	2.8		4.3	3.8	3.3	2.8		4.3	4.0	3.4	2.8		26.0
28.0	3.8	3.5	3.0			4.2	3.7	3.1	2.7		4.3	3.8	3.3	2.7		4.2	3.7	3.2	2.7		4.3	3.8	3.3	2.8		28.0
30.0	3.6	3.3	2.9			3.9	3.5	3.0			4.0	3.7	3.1	2.7		4.0	3.5	3.1	2.7		4.0	3.7	3.2	2.7		30.0
32.0	3.3	3.1	2.8			3.5	3.4	2.9			3.3	3.5	3.0			3.9	3.4	3.0			3.3	3.5	3.1	2.7		32.0
34.0	3.1	3.0	2.7			2.9	3.1	2.8			2.7	3.0	2.9			3.7	3.3	2.9			2.7	3.0	3.0	2.6		34.0
36.0	2.8	2.9				2.3	2.5	2.8			2.2	2.4	2.7			3.4	3.2	2.8			2.2	2.4	2.7			36.0
38.0	2.3	2.5				1.8	2.0	2.2			1.6	1.9	2.1			2.9	3.1	2.8			1.6	1.9	2.2			38.0
40.0	1.9	2.0				1.3	1.5					1.4	1.6			2.5	2.6	2.7				1.4	1.7			40.0
44.0																1.7	1.8									44.0
48.0																	1.1									48.0
52.0																										52.0
56.0																										56.0
60.0																										60.0
64.0																										64.0
68.0																										68.0
72.0																										72.0
1	46	46	46	46	46	92	92	92	92	92	92	92	92	92	92	0	0	0	0	0	92	92	92	92	92	1
2	46	46	46	46	46	46	46	46	46	46	92	92	92	92	92	46	46	46	46	46	92	92	92	92	92	2
3	46	46	46	46	46	46	46	46	46	46	46	46	46	46	46	92	92	92	92	92	92	92	92	92	92	3
4	46	46	46	46	46	46	46	46	46	46	46	46	46	46	46	92	92	92	92	92	46	46	46	46	46	4
5	46	46	46	46	46	46	46	46	46	46	46	46	46	46	46	92	92	92	92	92	46	46	46	46	46	5
ID	49	49	49	49	49	50	50	50	50	50	42	42	42	42	42	21	21	21	21	21	38	38	38	38	38	ID
[DEG]	31~83	33~85	44~85	60~85	74~85	39~83	41~85	43~85	58~85	76~85	48~83	47~85	49~85	59~85	75~85	39~83	33~85	43~85	59~85	75~85	53~83	52~85	54~85	60~85	75~85	[DEG]
	1	1	1	1	1	1	1	1	1	1	1	1	1	1	1	1	1	1	1	1	1	1	1	1	1	
	8.7t	8.7t	8.7t	8.7t	8.7t	8.7t	8.7t	8.7t	8.7t	8.7t	8.7t	8.7t	8.7t	8.7t	8.7t	8.7t	8.7t	8.7t	8.7t	8.7t	8.7t	8.7t	8.7t	8.7t	8.7t	

m	47.4	47.4	47.4	47.4	47.4	51.7	51.7	51.7	51.7	51.7	51.7	51.7	51.7	51.7	51.7	56.0	56.0	56.0	56.0	56.0	60.0	60.0	60.0	60.0	60.0	m
°	5	15	30	45	60	5	15	30	45	60	5	15	30	45	60	5	15	30	45	60	5	15	30	45	60	°
3.0																										3.0
3.5																										3.5
4.0																										4.0
4.5																										4.5
5.0																										5.0
6.0																										6.0
7.0																										7.0
8.0																										8.0
9.0																										9.0
10.0	4.3																									10.0
11.0	4.3	4.3				4.3					4.3															11.0
12.0	4.3	4.3				4.3	4.3				4.3	4.3				4.3										12.0
14.0	4.3	4.3	4.1			4.3	4.3				4.3	4.3				4.3	4.3				3.3	3.3				14.0
16.0	4.3	4.3	4.0	3.3		4.3	4.3	3.9			4.3	4.3	3.9			4.3	4.3	3.8			3.3	3.3				16.0
18.0	4.3	4.3	3.8	3.2	2.4	4.3	4.3	3.8	3.2	2.4	4.3	4.3	3.7	3.2	2.4	4.3	4.3	3.7	3.2		3.3	3.3	3.3			18.0
20.0	4.3	4.3	3.7	3.1	2.3	4.3	4.3	3.7	3.1	2.3	4.3	4.3	3.6	3.1	2.3	4.3	4.3	3.6	3.1	2.3	3.3	3.3	3.3	3.1	2.3	20.0
22.0	4.3	4.3	3.5	3.0	2.3	4.3	4.3	3.5	3.0	2.3	4.3	4.2	3.5	3.0	2.3	4.3	4.2	3.5	3.1	2.3	3.3	3.3	3.3	3.0	2.3	22.0
24.0	4.3	4.1	3.4	2.9		4.3	4.1	3.4	2.9		4.3	4.0	3.4	2.9		4.3	4.0	3.4	3.0	2.3	3.3	3.3	3.3	3.0	2.3	24.0
26.0	4.3	3.9	3.3	2.8		4.3	3.9	3.3	2.9		4.3	3.9	3.2	2.9		4.3	3.9	3.2	2.9		3.3	3.3	3.2	2.9		26.0
28.0	4.3	3.8	3.2	2.8		4.3	3.8	3.2	2.8		4.3	3.7	3.2	2.8		4.3	3.7	3.2	2.9		3.3	3.3	3.1	2.8		28.0
30.0	4.2	3.6	3.1	2.7		4.1	3.7	3.1	2.8		4.1	3.6	3.1	2.8		4.1	3.6	3.1	2.8		3.3	3.3	3.0	2.8		30.0
32.0	3.8	3.5	3.0	2.7		3.4	3.5	3.1	2.7		4.0	3.5	3.0	2.7		3.6	3.5	3.0	2.7		3.3	3.3	3.0	2.7		32.0
34.0	3.2	3.4	3.0	2.6		2.8	3.1	3.0	2.7		3.4	3.3	2.9	2.7		3.0	3.3	2.9	2.7		2.9	3.2	2.9	2.7		34.0
36.0	2.7	2.9	2.9			2.3	2.5	2.8	2.6		2.8	3.0	2.9	2.6		2.4	2.7	2.9	2.7		2.4	2.7	2.8	2.6		36.0
38.0	2.2	2.4	2.6			1.8	2.0	2.3			2.3	2.5	2.8			1.9	2.2	2.5	2.6		1.9	2.2	2.5	2.6		38.0
40.0	1.7	1.9	2.2				1.5	1.8			1.9	2.1	2.3			1.5	1.7	2.0				1.7	2.0	2.2		40.0
44.0			1.3									1.3	1.5													44.0
48.0																										48.0
52.0																										52.0
56.0																										56.0
60.0																										60.0
64.0																										64.0
68.0																										68.0
72.0																										72.0
1	46	46	46	46	46	92	92	92	92	92	46	46	46	46	46	92	92	92	92	92	100	100	100	100	100	1
2	92	92	92	92	92	92	92	92	92	92	92	92	92	92	92	92	92	92	92	92	100	100	100	100	100	2
3	92	92	92	92	92	92	92	92	92	92	92	92	92	92	92	92	92	92	92	92	100	100	100	100	100	3
4	92	92	92	92	92	92	92	92	92	92	92	92	92	92	92	92	92	92	92	92	100	100	100	100	100	4
5	46	46	46	46	46	46	46	46	46	46	92	92	92	92	92	92	92	92	92	92	100	100	100	100	100	5
ID	31	31	31	31	31	32	32	32	32	32	23	23	23	23	23	24	24	24	24	24	16	16	16	16	16	ID
[DEG]	50~83	52~85	48~85	60~85	75~85	56~83	56~85	57~85	59~85	74~85	54~83	51~85	52~85	59~85	74~85	57~83	59~85	61~85	62~85	74~85	62~83	62~85	64~85	65~85	74~85	[DEG]
	1	1	1	1	1	1	1	1	1	1	1	1	1	1	1	1	1	1	1	1	1	1	1	1	1	
	8.7t	8.7t	8.7t	8.7t	8.7t	8.7t	8.7t	8.7t	8.7t	8.7t	8.7t	8.7t	8.7t	8.7t	8.7t	8.7t	8.7t	8.7t	8.7t	8.7t	8.7t	8.7t	8.7t	8.7t	8.7t	

フルオートラフィングジブ

FLJ	1.6m + 17.4m	25.4 t	8.0m x 6.2m	360 °	JPN

m	12.8	12.8	12.8	12.8	12.8	25.8	25.8	25.8	25.8	25.8	30.1	30.1	30.1	30.1	30.1	30.1	30.1	30.1	30.1	30.1	34.4	34.4	34.4	34.4	34.4	m
°	5	15	30	45	60	5	15	30	45	60	5	15	30	45	60	5	15	30	45	60	5	15	30	45	60	°
3.0																										3.0
3.5																										3.5
4.0																										4.0
4.5																										4.5
5.0	3.3																									5.0
6.0	3.3																									6.0
7.0	3.3																									7.0
8.0	3.3	3.3				3.3					3.3					3.3										8.0
9.0	3.3	3.3				3.3	3.3				3.3					3.3					3.3					9.0
10.0	3.3	3.3				3.3	3.3				3.3	3.3				3.3	3.3				3.3					10.0
11.0	3.3	3.3				3.3	3.3				3.3	3.3				3.3	3.3				3.3	3.3				11.0
12.0	3.3	3.2	2.6			3.3	3.3				3.3	3.3				3.3	3.3				3.3	3.3				12.0
14.0	3.3	2.9	2.4			3.3	3.2	2.6			3.3	3.3	2.7			3.3	3.2	2.6			3.3	3.3				14.0
16.0	2.9	2.6	2.2	1.8		3.3	3.0	2.5			3.3	3.1	2.5			3.3	3.0	2.5			3.3	3.1	2.5			16.0
18.0	2.5	2.3	2.0	1.7		3.3	2.8	2.3	1.9		3.3	2.9	2.4	1.9		3.3	2.9	2.4	1.9		3.3	2.9	2.4	1.9		18.0
20.0	2.3	2.1	1.8	1.6		3.1	2.6	2.2	1.8		3.2	2.7	2.2	1.8	1.5	3.2	2.7	2.2	1.8	1.5	3.3	2.8	2.3	1.8	1.5	20.0
22.0	2.0	1.9	1.7			2.9	2.5	2.0	1.7		3.0	2.6	2.1	1.7	1.5	3.0	2.6	2.1	1.7	1.5	3.1	2.6	2.2	1.8	1.5	22.0
24.0	1.8	1.8	1.6			2.7	2.4	1.9	1.6		2.8	2.5	2.0	1.7		2.8	2.4	2.0	1.7		2.9	2.5	2.1	1.7		24.0
26.0	1.7	1.6				2.5	2.2	1.8	1.6		2.7	2.3	1.9	1.6		2.6	2.3	1.9	1.6		2.7	2.4	2.0	1.6		26.0
28.0	1.5					2.3	2.1	1.7	1.5		2.5	2.2	1.8	1.6		2.5	2.2	1.8	1.6		2.6	2.3	1.9	1.6		28.0
30.0						2.1	1.9	1.7			2.4	2.1	1.7	1.5		2.4	2.1	1.7	1.5		2.5	2.2	1.8	1.5		30.0
32.0						2.0	1.8	1.6			2.2	2.0	1.7			2.2	2.0	1.7			2.4	2.1	1.7	1.5		32.0
34.0						1.8	1.7				2.0	1.9	1.6			2.0	1.9	1.6			2.3	2.0	1.7			34.0
36.0						1.7	1.7				1.9	1.8	1.6			1.9	1.8	1.6			2.1	1.9	1.6			36.0
38.0						1.6	1.6				1.8	1.7				1.8	1.7				2.0	1.8	1.6			38.0
40.0						1.5					1.7	1.6				1.7	1.6				1.8	1.7				40.0
44.0																1.5										44.0
48.0																										48.0
52.0																										52.0
56.0																										56.0
60.0																										60.0
64.0																										64.0
68.0																										68.0
72.0																										72.0
1	0	0	0	0		46	46	46	46		92	92	92	92	92	46	46	46	46	46	92	92	92	92	92	1
2	0	0	0	0		46	46	46	46		46	46	46	46	46	46	46	46	46	46	46	46	46	46	46	2
3	0	0	0	0		46	46	46	46		46	46	46	46	46	46	46	46	46	46	46	46	46	46	46	3
4	0	0	0	0		0	0	0	0		0	0	0	0	0	46	46	46	46	46	46	46	46	46	46	4
5	0	0	0	0		0	0	0	0		0	0	0	0	0	0	0	0	0	0	0	0	0	0	0	5
ID	1	1	1	1		66	66	66	66		67	67	67	67	67	54	54	54	54	54	55	55	55	55	55	ID
[DEG]	0~83	0~85	0~85	0~85		20~83	30~85	44~85	60~85		33~83	35~85	43~85	57~85	73~85	21~83	35~85	43~85	57~85	73~85	41~83	43~85	46~85	58~85	75~85	[DEG]
	1	1	1	1		1	1	1	1		1	1	1	1	1	1	1	1	1	1	1	1	1	1	1	
	8.7t	8.7t	8.7t	8.7t		8.7t	8.7t	8.7t	8.7t		8.7t	8.7t	8.7t	8.7t	8.7t	8.7t	8.7t	8.7t	8.7t	8.7t	8.7t	8.7t	8.7t	8.7t	8.7t	

m	34.4	34.4	34.4	34.4	34.4	38.7	38.7	38.7	38.7	38.7	43.0	43.0	43.0	43.0	43.0	43.0	43.0	43.0	43.0	43.0	47.4	47.4	47.4	47.4	47.4	m
°	5	15	30	45	60	5	15	30	45	60	5	15	30	45	60	5	15	30	45	60	5	15	30	45	60	°
3.0																										3.0
3.5																										3.5
4.0																										4.0
4.5																										4.5
5.0																										5.0
6.0																										6.0
7.0																										7.0
8.0																										8.0
9.0	3.3																									9.0
10.0	3.3					3.3																				10.0
11.0	3.3	3.3				3.3					3.3					2.9										11.0
12.0	3.3	3.3				3.3	3.3				3.3	3.3				2.9					3.2					12.0
14.0	3.3	3.2				3.3	3.3				3.3	3.2				2.9	2.9				3.2	3.2				14.0
16.0	3.3	3.0	2.5			3.3	3.1	2.5			3.3	3.1				2.9	2.9				3.2	3.1				16.0
18.0	3.3	2.9	2.4	1.9		3.3	2.9	2.4			3.3	2.9	2.4			2.9	2.8	2.3			3.2	2.9	2.4			18.0
20.0	3.2	2.7	2.3	1.8	1.5	3.3	2.8	2.3	1.9		3.3	2.8	2.3	1.9		2.9	2.7	2.2	1.9		3.2	2.8	2.3			20.0
22.0	3.0	2.6	2.2	1.8	1.5	3.1	2.6	2.2	1.8	1.5	3.1	2.7	2.2	1.8	1.5	2.9	2.6	2.2	1.8	1.5	3.1	2.7	2.2	1.8		22.0
24.0	2.9	2.5	2.1	1.7		2.9	2.5	2.1	1.7	1.5	3.0	2.5	2.1	1.8	1.5	2.9	2.5	2.1	1.8	1.5	3.0	2.5	2.1	1.8	1.5	24.0
26.0	2.7	2.4	2.0	1.6		2.8	2.4	2.1	1.7		2.8	2.4	2.1	1.7		2.7	2.4	2.0	1.7		2.9	2.4	2.1	1.7	1.4	26.0
28.0	2.6	2.3	1.9	1.6		2.7	2.3	2.0	1.6		2.7	2.3	2.0	1.6		2.6	2.3	2.0	1.6		2.7	2.4	2.0	1.7		28.0
30.0	2.5	2.2	1.8	1.5		2.5	2.2	1.9	1.6		2.6	2.3	1.9	1.6		2.5	2.2	1.9	1.6		2.6	2.3	1.9	1.6		30.0
32.0	2.4	2.1	1.7	1.5		2.4	2.1	1.8	1.5		2.5	2.2	1.9	1.6		2.4	2.1	1.8	1.6		2.5	2.2	1.9	1.6		32.0
34.0	2.3	2.0	1.7			2.3	2.1	1.7	1.5		2.4	2.1	1.8	1.5		2.3	2.0	1.8	1.5		2.4	2.1	1.8	1.6		34.0
36.0	2.1	1.9	1.6			2.2	2.0	1.7			2.3	2.0	1.7	1.5		2.2	2.0	1.7	1.5		2.3	2.0	1.8	1.5		36.0
38.0	2.0	1.8	1.6			2.2	1.9	1.6			2.2	2.0	1.7			2.2	1.9	1.7			2.2	2.0	1.7	1.5		38.0
40.0	1.9	1.7				2.0	1.9	1.6			1.8	1.9	1.6			2.1	1.9	1.6			1.8	1.9	1.7			40.0
44.0	1.7	1.6				1.2	1.4					1.2	1.5			2.0	1.8	1.6				1.2	1.6			44.0
48.0																1.5	1.7									48.0
52.0																										52.0
56.0																										56.0
60.0																										60.0
64.0																										64.0
68.0																										68.0
72.0																										72.0
1	46	46	46	46	46	92	92	92	92	92	92	92	92	92	92	0	0	0	0	0	92	92	92	92	92	1
2	46	46	46	46	46	46	46	46	46	46	92	92	92	92	92	46	46	46	46	46	92	92	92	92	92	2
3	46	46	46	46	46	46	46	46	46	46	46	46	46	46	46	92	92	92	92	92	92	92	92	92	92	3
4	46	46	46	46	46	46	46	46	46	46	46	46	46	46	46	92	92	92	92	92	46	46	46	46	46	4
5	46	46	46	46	46	46	46	46	46	46	46	46	46	46	46	92	92	92	92	92	46	46	46	46	46	5
ID	49	49	49	49	49	50	50	50	50	50	42	42	42	42	42	21	21	21	21	21	38	38	38	38	38	ID
[DEG]	32~83	35~85	46~85	58~85	75~85	40~83	42~85	44~85	59~85	74~85	51~83	48~85	50~85	57~85	74~85	40~83	42~85	44~85	58~85	74~85	55~83	52~85	55~85	61~85	73~85	[DEG]
	1	1	1	1	1	1	1	1	1	1	1	1	1	1	1	1	1	1	1	1	1	1	1	1	1	
	8.7t	8.7t	8.7t	8.7t	8.7t	8.7t	8.7t	8.7t	8.7t	8.7t	8.7t	8.7t	8.7t	8.7t	8.7t	8.7t	8.7t	8.7t	8.7t	8.7t	8.7t	8.7t	8.7t	8.7t	8.7t	

FLJ	1.6m + 17.4m	25.4 t	8.0m x 6.2m	360 °	JPN

m	47.4	47.4	47.4	47.4	47.4	51.7	51.7	51.7	51.7	51.7	51.7	51.7	51.7	51.7	51.7	56.0	56.0	56.0	56.0	56.0	60.0	60.0	60.0	60.0	60.0	m
°	5	15	30	45	60	5	15	30	45	60	5	15	30	45	60	5	15	30	45	60	5	15	30	45	60	°
3.0																										3.0
3.5																										3.5
4.0																										4.0
4.5																										4.5
5.0																										5.0
6.0																										6.0
7.0																										7.0
8.0																										8.0
9.0																										9.0
10.0																										10.0
11.0																										11.0
12.0	3.1																									12.0
14.0	3.1	3.1				3.2	3.1				3.2	3.0				2.9										14.0
16.0	3.1	3.0				3.2	3.0				3.1	2.9				2.9	2.9				2.8	2.7				16.0
18.0	3.1	2.9	2.4			3.2	2.9				3.1	2.8				2.9	2.8				2.8	2.6				18.0
20.0	3.1	2.7	2.3			3.1	2.7	2.3			3.0	2.7	2.2			2.9	2.7	2.2			2.8	2.6				20.0
22.0	3.1	2.6	2.2	1.8		3.1	2.6	2.2	1.8		2.9	2.6	2.2	1.8		2.9	2.6	2.2			2.7	2.5	2.1			22.0
24.0	2.9	2.5	2.1	1.8	1.5	2.9	2.5	2.1	1.8	1.5	2.9	2.5	2.1	1.8	1.5	2.8	2.5	2.1	1.8		2.7	2.5	2.1	1.8		24.0
26.0	2.8	2.4	2.0	1.7	1.4	2.8	2.4	2.1	1.7	1.4	2.8	2.4	2.0	1.7	1.4	2.8	2.4	2.0	1.8	1.4	2.6	2.4	2.0	1.8	1.4	26.0
28.0	2.7	2.3	2.0	1.7		2.7	2.3	2.0	1.7	1.4	2.7	2.3	2.0	1.7	1.4	2.7	2.3	2.0	1.7	1.4	2.6	2.3	2.0	1.7	1.4	28.0
30.0	2.6	2.2	1.9	1.6		2.6	2.3	1.9	1.6		2.6	2.2	1.9	1.6		2.6	2.2	1.9	1.7		2.5	2.2	1.9	1.7	1.4	30.0
32.0	2.5	2.2	1.9	1.6		2.5	2.2	1.9	1.6		2.5	2.2	1.9	1.6		2.5	2.2	1.9	1.6		2.5	2.2	1.8	1.6		32.0
34.0	2.4	2.1	1.8	1.6		2.4	2.1	1.8	1.6		2.4	2.1	1.8	1.6		2.4	2.1	1.8	1.6		2.4	2.1	1.8	1.6		34.0
36.0	2.3	2.0	1.8	1.5		2.3	2.0	1.8	1.5		2.3	2.0	1.7	1.5		2.3	2.0	1.8	1.6		2.3	2.0	1.7	1.6		36.0
38.0	2.2	2.0	1.7	1.5		2.3	2.0	1.7	1.5		2.2	2.0	1.7	1.5		2.2	2.0	1.7	1.5		2.2	2.0	1.7	1.5		38.0
40.0	2.1	1.9	1.7			1.8	1.9	1.7	1.5		2.1	1.9	1.7	1.5		2.0	1.9	1.7	1.5		1.9	1.9	1.7	1.5		40.0
44.0	1.5	1.7	1.6				1.3	1.6			1.6	1.8	1.6				1.5	1.6				1.4	1.6	1.5		44.0
48.0			1.2									1.1	1.4													48.0
52.0																										52.0
56.0																										56.0
60.0																										60.0
64.0																										64.0
68.0																										68.0
72.0																										72.0
1	46	46	46	46	46	92	92	92	92	92	46	46	46	46	46	92	92	92	92	92	100	100	100	100	100	1
2	92	92	92	92	92	92	92	92	92	92	92	92	92	92	92	92	92	92	92	92	100	100	100	100	100	2
3	92	92	92	92	92	92	92	92	92	92	92	92	92	92	92	92	92	92	92	92	100	100	100	100	100	3
4	92	92	92	92	92	92	92	92	92	92	92	92	92	92	92	92	92	92	92	92	100	100	100	100	100	4
5	46	46	46	46	46	46	46	46	46	46	92	92	92	92	92	92	92	92	92	92	100	100	100	100	100	5
ID	31	31	31	31	31	32	32	32	32	32	23	23	23	23	23	24	24	24	24	24	16	16	16	16	16	ID
[DEG]	50~83	52~85	49~85	61~85	73~85	58~83	56~85	58~85	60~85	73~85	54~83	51~85	54~85	60~85	73~85	61~83	59~85	61~85	58~85	73~85	63~83	62~85	64~85	65~85	73~85	[DEG]
	1	1	1	1	1	1	1	1	1	1	1	1	1	1	1	1	1	1	1	1	1	1	1	1	1	
	8.7t	8.7t	8.7t	8.7t	8.7t	8.7t	8.7t	8.7t	8.7t	8.7t	8.7t	8.7t	8.7t	8.7t	8.7t	8.7t	8.7t	8.7t	8.7t	8.7t	8.7t	8.7t	8.7t	8.7t	8.7t	

FLJ	1.6m + 7.4m	25.4 t	8.0m x 5.0m	360 °	JPN

m	12.8	12.8	12.8	12.8	12.8	25.8	25.8	25.8	25.8	25.8	30.1	30.1	30.1	30.1	30.1	30.1	30.1	30.1	30.1	30.1	34.4	34.4	34.4	34.4	34.4	m
°	5	15	30	45	60	5	15	30	45	60	5	15	30	45	60	5	15	30	45	60	5	15	30	45	60	°
3.0	7.3																									3.0
3.5	7.3	7.3																								3.5
4.0	7.3	7.3				7.3																				4.0
4.5	7.3	7.3				7.3																				4.5
5.0	7.3	7.3				7.3	7.3				7.3					7.3										5.0
6.0	7.3	7.3	7.3			7.3	7.3				7.3	7.3				7.3	7.3				7.3	7.3				6.0
7.0	7.3	7.3	7.3	5.9		7.3	7.3	7.3			7.3	7.3	7.3			7.3	7.3	7.3			7.3	7.3				7.0
8.0	7.3	7.3	7.0	5.7		7.3	7.3	7.3	6.2		7.3	7.3	7.3			7.3	7.3	7.3			7.3	7.3	7.3			8.0
9.0	7.3	7.3	6.6	5.5		7.3	7.3	7.3	6.0	4.5	7.3	7.3	7.3	6.1		7.3	7.3	7.3	6.1		7.3	7.3	7.3	6.2		9.0
10.0	7.3	7.3	6.3	5.4		7.3	7.3	7.3	5.9	4.5	7.3	7.3	7.3	6.0	4.5	7.3	7.3	7.3	6.0	4.5	7.3	7.3	7.3	6.1	4.5	10.0
11.0	7.3	7.0	6.1	5.2		7.3	7.3	7.3	5.8	4.4	7.3	7.3	7.3	5.9	4.5	7.3	7.3	7.3	5.9	4.5	7.3	7.3	7.3	6.0	4.5	11.0
12.0	7.1	6.5	5.8			7.3	7.3	7.0	5.6		7.3	7.3	7.3	5.8	4.4	7.3	7.3	7.3	5.8	4.4	7.3	7.3	7.3	5.9	4.4	12.0
14.0	6.1	5.9	5.4			7.3	7.3	6.6	5.4		7.3	7.3	6.9	5.6		7.3	7.3	6.9	5.6		7.3	7.3	7.2	5.7	4.4	14.0
16.0	5.4	5.3				7.3	7.3	6.2	5.2		7.3	7.3	6.5	5.4		7.3	7.3	6.5	5.4		7.3	7.3	6.8	5.5		16.0
18.0	4.9					7.3	6.9	5.9	5.1		7.3	7.3	6.2	5.2		7.3	7.3	6.2	5.2		7.3	7.3	6.5	5.3		18.0
20.0						6.7	6.4	5.7			6.2	6.5	5.9	5.1		7.0	7.0	5.9	5.1		6.5	6.8	6.2	5.2		20.0
22.0						5.4	5.6	5.4			4.8	5.1	5.5			5.6	5.9	5.7			5.1	5.4	5.8	5.1		22.0
24.0						4.3	4.5	4.7			3.7	4.0	4.2			4.5	4.7	5.0			4.0	4.3	4.6			24.0
26.0						3.3	3.5				2.8	3.0	3.2			3.6	3.8	4.0			3.1	3.3	3.6			26.0
28.0						2.6	2.7				2.0	2.2				2.8	3.0				2.3	2.5	2.7			28.0
30.0						1.9					1.3	1.5				2.2	2.3				1.6	1.8	2.0			30.0
32.0																1.6	1.6									32.0
34.0																										34.0
36.0																										36.0
38.0																										38.0
40.0																										40.0
44.0																										44.0
48.0																										48.0
52.0																										52.0
56.0																										56.0
60.0																										60.0
64.0																										64.0
68.0																										68.0
72.0																										72.0
1	0	0	0	0		46	46	46	46	46	92	92	92	92	92	46	46	46	46	46	92	92	92	92	92	1
2	0	0	0	0		46	46	46	46	46	46	46	46	46	46	46	46	46	46	46	46	46	46	46	46	2
3	0	0	0	0		46	46	46	46	46	46	46	46	46	46	46	46	46	46	46	46	46	46	46	46	3
4	0	0	0	0		0	0	0	0	0	0	0	0	0	0	46	46	46	46	46	46	46	46	46	46	4
5	0	0	0	0		0	0	0	0	0	0	0	0	0	0	0	0	0	0	0	0	0	0	0	0	5
ID	1	1	1	1		66	66	66	66	66	67	67	67	67	67	54	54	54	54	54	55	55	55	55	55	ID
[DEG]	0~83	0~85	0~85	0~85		22~83	31~85	45~85	61~85	74~85	35~83	37~85	43~85	62~85	77~85	29~83	31~85	43~85	61~85	77~85	43~83	45~85	46~85	59~85	76~85	[DEG]
	1	1	1	1		1	1	1	1	1	1	1	1	1	1	1	1	1	1	1	1	1	1	1	1	
	8.7t	8.7t	8.7t	8.7t		8.7t	8.7t	8.7t	8.7t	8.7t	8.7t	8.7t	8.7t	8.7t	8.7t	8.7t	8.7t	8.7t	8.7t	8.7t	8.7t	8.7t	8.7t	8.7t	8.7t	

フルオートラフィングジブ

FLJ	1.6m + 7.4m	25.4 t	8.0m x 5.0m	360 °	JPN

m	34.4	34.4	34.4	34.4	34.4	38.7	38.7	38.7	38.7	38.7	43.0	43.0	43.0	43.0	43.0	43.0	43.0	43.0	43.0	43.0	47.4	47.4	47.4	47.4	47.4	m
°	5	15	30	45	60	5	15	30	45	60	5	15	30	45	60	5	15	30	45	60	5	15	30	45	60	°
3.0																										3.0
3.5																										3.5
4.0																										4.0
4.5																										4.5
5.0																										5.0
6.0	7.3	7.3																								6.0
7.0	7.3	7.3				7.3	7.3																			7.0
8.0	7.3	7.3	7.3			7.3	7.3				7.3	7.3				7.3	7.3					7.3				8.0
9.0	7.3	7.3	7.3	6.2		7.3	7.3	7.3			7.3	7.3	7.3			7.3	7.3				7.3	7.3				9.0
10.0	7.3	7.3	7.3	6.1	4.5	7.3	7.3	7.3	6.2		7.3	7.3	7.3			7.3	7.3	7.3			7.3	7.3	7.3			10.0
11.0	7.3	7.3	7.3	6.0	4.5	7.3	7.3	7.3	6.1	4.5	7.3	7.3	7.3	6.1	4.5	7.3	7.3	7.3	6.1		7.3	7.3	7.3			11.0
12.0	7.3	7.3	7.3	5.9	4.4	7.3	7.3	7.3	6.0	4.5	7.3	7.3	7.3	6.0	4.5	7.3	7.3	7.3	6.0	4.5	7.3	7.3	7.3	6.1	4.5	12.0
14.0	7.3	7.3	7.2	5.7	4.4	7.3	7.3	7.3	5.8	4.4	7.3	7.3	7.3	5.8	4.4	7.3	7.3	7.3	5.8	4.4	7.3	7.3	7.3	5.9	4.4	14.0
16.0	7.3	7.3	6.8	5.5		7.3	7.3	7.0	5.6		7.3	7.3	7.3	5.7	4.4	7.3	7.3	7.3	5.7	4.4	7.3	7.3	7.3	5.8	4.4	16.0
18.0	7.3	7.3	6.5	5.3		7.3	7.3	6.7	5.4		7.3	7.3	6.9	5.5		7.3	7.3	6.9	5.5		7.3	7.3	7.1	5.6		18.0
20.0	7.3	7.3	6.2	5.2		6.8	7.2	6.4	5.3		6.7	7.1	6.7	5.4		7.3	7.3	6.7	5.4		6.8	7.1	6.9	5.5		20.0
22.0	6.0	6.2	6.0	5.1		5.5	5.8	6.1	5.2		5.4	5.7	6.1	5.3		6.8	7.0	6.4	5.3		5.4	5.7	6.1	5.4		22.0
24.0	4.9	5.1	5.4			4.4	4.6	4.9	5.1		4.2	4.5	4.9	5.1		5.6	5.8	6.1	5.2		4.3	4.6	4.9	5.2		24.0
26.0	3.9	4.1	4.4			3.4	3.7	3.9			3.3	3.6	3.9	4.1		4.7	4.9	5.1	5.1		3.4	3.6	3.9	4.1		26.0
28.0	3.2	3.3	3.5			2.7	2.9	3.1			2.5	2.8	3.0			3.9	4.1	4.3			2.6	2.8	3.1	3.3		28.0
30.0	2.5	2.6	2.8			2.0	2.2	2.4			1.9	2.1	2.3			3.2	3.4	3.5			1.9	2.1	2.4			30.0
32.0	1.9	2.0				1.4	1.5	1.7					1.6			2.6	2.8	2.9					1.7			32.0
34.0	1.4	1.5														2.1	2.2	2.4								34.0
36.0																1.7	1.8	1.9								36.0
38.0																1.2	1.3									38.0
40.0																										40.0
44.0																										44.0
48.0																										48.0
52.0																										52.0
56.0																										56.0
60.0																										60.0
64.0																										64.0
68.0																										68.0
72.0																										72.0
1	46	46	46	46	46	92	92	92	92	92	92	92	92	92	92	0	0	0	0	0	92	92	92	92	92	1
2	46	46	46	46	46	46	46	46	46	46	92	92	92	92	92	46	46	46	46	46	92	92	92	92	92	2
3	46	46	46	46	46	46	46	46	46	46	46	46	46	46	46	92	92	92	92	92	92	92	92	92	92	3
4	46	46	46	46	46	46	46	46	46	46	46	46	46	46	46	92	92	92	92	92	46	46	46	46	46	4
5	46	46	46	46	46	46	46	46	46	46	46	46	46	46	46	92	92	92	92	92	46	46	46	46	46	5
ID	49	49	49	49	49	50	50	50	50	50	42	42	42	42	42	21	21	21	21	21	38	38	38	38	38	ID
[DEG]	34~83	35~85	46~85	59~85	75~85	46~83	47~85	48~85	59~85	75~85	54~83	55~85	53~85	60~85	74~85	42~83	43~85	44~85	61~85	74~85	58~83	59~85	58~85	58~85	74~85	[DEG]
	1	1	1	1	1	1	1	1	1	1	1	1	1	1	1	1	1	1	1	1	1	1	1	1	1	
	8.7t	8.7t	8.7t	8.7t	8.7t	8.7t	8.7t	8.7t	8.7t	8.7t	8.7t	8.7t	8.7t	8.7t	8.7t	8.7t	8.7t	8.7t	8.7t	8.7t	8.7t	8.7t	8.7t	8.7t	8.7t	

m	47.4	47.4	47.4	47.4	47.4	51.7	51.7	51.7	51.7	51.7	51.7	51.7	51.7	51.7	51.7	56.0	56.0	56.0	56.0	56.0	60.0	60.0	60.0	60.0	60.0	m
°	5	15	30	45	60	5	15	30	45	60	5	15	30	45	60	5	15	30	45	60	5	15	30	45	60	°
3.0																										3.0
3.5																										3.5
4.0																										4.0
4.5																										4.5
5.0																										5.0
6.0																										6.0
7.0																										7.0
8.0		7.3																								8.0
9.0	7.3	7.3					7.3					6.4														9.0
10.0	7.3	7.3	7.3			7.3	7.3				6.4	6.4					6.3									10.0
11.0	7.3	7.3	7.3			7.3	7.3	7.3			6.4	6.4	6.4			6.3	6.3					5.3				11.0
12.0	7.3	7.3	7.3	6.1	4.5	7.3	7.3	7.3			6.4	6.4	6.4			6.3	6.3	6.3			5.3	5.3				12.0
14.0	7.3	7.3	7.3	5.9	4.4	7.3	7.3	7.3	6.0	4.5	6.4	6.4	6.4	6.0	4.5	6.3	6.3	6.3	6.0	4.5	5.3	5.3	5.3			14.0
16.0	7.3	7.3	7.3	5.8	4.4	7.3	7.3	7.3	5.8	4.4	6.4	6.4	6.4	5.8	4.4	6.3	6.3	6.3	5.9	4.4	5.3	5.3	5.3	5.3	4.4	16.0
18.0	7.3	7.3	7.1	5.6		7.3	7.3	7.3	5.7	4.3	6.4	6.4	6.4	5.7	4.3	6.3	6.3	6.3	5.7	4.4	5.3	5.3	5.3	5.3	4.4	18.0
20.0	7.3	7.3	6.9	5.5		6.9	7.3	7.0	5.5		6.4	6.4	6.4	5.5		6.3	6.3	6.3	5.6		5.3	5.3	5.3	5.3	4.3	20.0
22.0	6.0	6.3	6.6	5.4		5.6	5.9	6.3	5.4		6.2	6.4	6.4	5.4		5.8	6.1	6.3	5.5		5.3	5.3	5.3	5.3		22.0
24.0	4.9	5.1	5.4	5.3		4.5	4.7	5.1	5.3		5.1	5.3	5.6	5.3		4.7	5.0	5.3	5.4		4.6	4.9	5.3	5.3		24.0
26.0	3.9	4.1	4.4	4.6		3.5	3.8	4.1	4.3		4.1	4.4	4.6	4.8		3.8	4.0	4.3	4.5		3.7	4.0	4.3	4.5		26.0
28.0	3.1	3.3	3.6	3.8		2.7	3.0	3.2	3.4		3.3	3.5	3.8	4.0		3.0	3.2	3.5	3.7		2.9	3.2	3.5	3.7		28.0
30.0	2.5	2.6	2.9			2.1	2.3	2.5	2.7		2.7	2.9	3.1	3.2		2.3	2.5	2.7	2.9		2.3	2.5	2.7	2.9		30.0
32.0	1.9	2.0	2.2				1.7	1.9			2.1	2.3	2.5				1.9	2.1	2.3				2.1	2.3		32.0
34.0		1.5	1.7								1.6	1.7	1.9													34.0
36.0																										36.0
38.0																										38.0
40.0																										40.0
44.0																										44.0
48.0																										48.0
52.0																										52.0
56.0																										56.0
60.0																										60.0
64.0																										64.0
68.0																										68.0
72.0																										72.0
1	46	46	46	46	46	92	92	92	92	92	46	46	46	46	46	92	92	92	92	92	100	100	100	100	100	1
2	92	92	92	92	92	92	92	92	92	92	92	92	92	92	92	92	92	92	92	92	100	100	100	100	100	2
3	92	92	92	92	92	92	92	92	92	92	92	92	92	92	92	92	92	92	92	92	100	100	100	100	100	3
4	92	92	92	92	92	92	92	92	92	92	92	92	92	92	92	92	92	92	92	92	100	100	100	100	100	4
5	46	46	46	46	46	46	46	46	46	46	92	92	92	92	92	92	92	92	92	92	100	100	100	100	100	5
ID	31	31	31	31	31	32	32	32	32	32	23	23	23	23	23	24	24	24	24	24	16	16	16	16	16	ID
[DEG]	55~83	54~85	55~85	58~85	74~85	61~83	60~85	61~85	62~85	74~85	56~83	57~85	59~85	59~85	74~85	64~83	63~85	64~85	62~85	74~85	66~83	67~85	66~85	67~85	74~85	[DEG]
	1	1	1	1	1	1	1	1	1	1	1	1	1	1	1	1	1	1	1	1	1	1	1	1	1	
	8.7t	8.7t	8.7t	8.7t	8.7t	8.7t	8.7t	8.7t	8.7t	8.7t	8.7t	8.7t	8.7t	8.7t	8.7t	8.7t	8.7t	8.7t	8.7t	8.7t	8.7t	8.7t	8.7t	8.7t	8.7t	

FLJ	1.6m + 12.4m	25.4 t	8.0m x 5.0m	360 °	JPN

m	12.8	12.8	12.8	12.8	12.8	25.8	25.8	25.8	25.8	25.8	30.1	30.1	30.1	30.1	30.1	30.1	30.1	30.1	30.1	30.1	34.4	34.4	34.4	34.4	34.4	m
°	5	15	30	45	60	5	15	30	45	60	5	15	30	45	60	5	15	30	45	60	5	15	30	45	60	°
3.0																										3.0
3.5	4.3																									3.5
4.0	4.3																									4.0
4.5	4.3																									4.5
5.0	4.3																									5.0
6.0	4.3	4.3				4.3																				6.0
7.0	4.3	4.3				4.3	4.3				4.3					4.3										7.0
8.0	4.3	4.3				4.3	4.3				4.3	4.3				4.3	4.3				4.3	4.3				8.0
9.0	4.3	4.3	4.3			4.3	4.3				4.3	4.3				4.3	4.3				4.3	4.3				9.0
10.0	4.3	4.3	4.1			4.3	4.3	4.3			4.3	4.3				4.3	4.3				4.3	4.3				10.0
11.0	4.3	4.3	3.9	3.2		4.3	4.3	4.3			4.3	4.3	4.3			4.3	4.3	4.3			4.3	4.3	4.3			11.0
12.0	4.3	4.3	3.7	3.1		4.3	4.3	4.3	3.3		4.3	4.3	4.3			4.3	4.3	4.3			4.3	4.3	4.3			12.0
14.0	4.1	3.8	3.4	2.9		4.3	4.3	4.0	3.2	2.4	4.3	4.3	4.2	3.2	2.4	4.3	4.3	4.2	3.2	2.4	4.3	4.3	4.3	3.3		14.0
16.0	3.6	3.4	3.1	2.7		4.3	4.3	3.7	3.0	2.4	4.3	4.3	3.9	3.1	2.4	4.3	4.3	3.9	3.1	2.4	4.3	4.3	4.0	3.1	2.4	16.0
18.0	3.2	3.1	2.9			4.3	4.2	3.5	2.9		4.3	4.3	3.7	3.0		4.3	4.3	3.7	3.0		4.3	4.3	3.8	3.0	2.3	18.0
20.0	2.9	2.9				4.3	3.9	3.3	2.8		4.3	4.2	3.5	2.9		4.3	4.2	3.5	2.9		4.3	4.3	3.6	2.9		20.0
22.0	2.6	2.7				4.0	3.6	3.1	2.7		4.3	3.9	3.3	2.8		4.3	3.9	3.3	2.8		4.3	4.2	3.4	2.8		22.0
24.0						3.7	3.4	3.0			4.1	3.7	3.1	2.7		4.1	3.7	3.1	2.7		4.3	3.9	3.3	2.8		24.0
26.0						3.4	3.2	2.9			3.8	3.4	3.0			3.8	3.4	3.0			3.9	3.7	3.1	2.7		26.0
28.0						3.1	3.0	2.8			3.0	3.3	2.9			3.5	3.3	2.9			3.1	3.5	3.0			28.0
30.0						2.8	2.8				2.3	2.6	2.8			3.0	3.1	2.8			2.5	2.7	2.9			30.0
32.0						2.2	2.4				1.7	1.9	2.2			2.4	2.6	2.7			1.9	2.1	2.4			32.0
34.0						1.7						1.3				1.9	2.0				1.3	1.6	1.8			34.0
36.0																1.4	1.5									36.0
38.0																										38.0
40.0																										40.0
44.0																										44.0
48.0																										48.0
52.0																										52.0
56.0																										56.0
60.0																										60.0
64.0																										64.0
68.0																										68.0
72.0																										72.0
1	0	0	0	0		46	46	46	46	46	92	92	92	92	92	46	46	46	46	46	92	92	92	92	92	1
2	0	0	0	0		46	46	46	46	46	46	46	46	46	46	46	46	46	46	46	46	46	46	46	46	2
3	0	0	0	0		46	46	46	46	46	46	46	46	46	46	46	46	46	46	46	46	46	46	46	46	3
4	0	0	0	0		0	0	0	0	0	0	0	0	0	0	46	46	46	46	46	46	46	46	46	46	4
5	0	0	0	0		0	0	0	0	0	0	0	0	0	0	0	0	0	0	0	0	0	0	0	0	5
ID	1	1	1	1		66	66	66	66	66	67	67	67	67	67	54	54	54	54	54	55	55	55	55	55	ID
[DEG]	0~83	0~85	0~85	0~85		25~83	27~85	47~85	58~85	76~85	41~83	38~85	45~85	59~85	75~85	31~83	33~85	45~85	59~85	75~85	43~83	46~85	44~85	60~85	74~85	[DEG]
	1	1	1	1		1	1	1	1	1	1	1	1	1	1	1	1	1	1	1	1	1	1	1	1	
	8.7t	8.7t	8.7t	8.7t		8.7t	8.7t	8.7t	8.7t	8.7t	8.7t	8.7t	8.7t	8.7t	8.7t	8.7t	8.7t	8.7t	8.7t	8.7t	8.7t	8.7t	8.7t	8.7t	8.7t	

m	34.4	34.4	34.4	34.4	34.4	38.7	38.7	38.7	38.7	38.7	43.0	43.0	43.0	43.0	43.0	43.0	43.0	43.0	43.0	43.0	47.4	47.4	47.4	47.4	47.4	m
°	5	15	30	45	60	5	15	30	45	60	5	15	30	45	60	5	15	30	45	60	5	15	30	45	60	°
3.0																										3.0
3.5																										3.5
4.0																										4.0
4.5																										4.5
5.0																										5.0
6.0																										6.0
7.0	4.3																									7.0
8.0	4.3	4.3				4.3																				8.0
9.0	4.3	4.3				4.3	4.3				4.3					4.3										9.0
10.0	4.3	4.3				4.3	4.3				4.3	4.3				4.3	4.3				4.3					10.0
11.0	4.3	4.3	4.3			4.3	4.3				4.3	4.3				4.3	4.3				4.3	4.3				11.0
12.0	4.3	4.3	4.3			4.3	4.3	4.3			4.3	4.3				4.3	4.3				4.3	4.3				12.0
14.0	4.3	4.3	4.2	3.3		4.3	4.3	4.2	3.3		4.3	4.3	4.2			4.3	4.3	4.1			4.3	4.3	4.2			14.0
16.0	4.3	4.3	4.0	3.1	2.4	4.3	4.3	4.0	3.2	2.4	4.3	4.3	4.0	3.2	2.4	4.3	4.3	3.9	3.2		4.3	4.3	4.0	3.3		16.0
18.0	4.3	4.3	3.8	3.0	2.3	4.3	4.3	3.9	3.1	2.3	4.3	4.3	3.9	3.1	2.4	4.3	4.3	3.7	3.1	2.4	4.3	4.3	3.8	3.2	2.4	18.0
20.0	4.3	4.3	3.6	2.9		4.3	4.3	3.7	3.0	2.3	4.3	4.3	3.7	3.0	2.3	4.3	4.3	3.6	3.0	2.3	4.3	4.3	3.7	3.1	2.3	20.0
22.0	4.3	4.2	3.4	2.8		4.3	4.3	3.6	2.9		4.3	4.3	3.6	2.9		4.3	4.2	3.5	2.9		4.3	4.3	3.6	3.0	2.3	22.0
24.0	4.3	3.9	3.3	2.8		4.3	4.1	3.4	2.8		4.3	4.2	3.5	2.9		4.3	4.0	3.4	2.9		4.3	4.2	3.4	2.9		24.0
26.0	4.1	3.7	3.1	2.7		4.2	3.9	3.3	2.7		4.0	4.0	3.4	2.8		4.3	3.8	3.3	2.8		4.0	4.0	3.4	2.8		26.0
28.0	3.8	3.5	3.0			3.4	3.7	3.1	2.7		3.2	3.6	3.3	2.7		4.2	3.7	3.2	2.7		3.2	3.6	3.3	2.8		28.0
30.0	3.2	3.3	2.9			2.7	3.0	3.0			2.6	2.9	3.1	2.7		3.8	3.5	3.1	2.7		2.6	2.9	3.2	2.7		30.0
32.0	2.6	2.8	2.8			2.1	2.4	2.7			2.0	2.3	2.6			3.2	3.4	3.0			2.0	2.3	2.6	2.7		32.0
34.0	2.1	2.3	2.5			1.6	1.8	2.1				1.7	2.0			2.6	2.8	2.9				1.7	2.1	2.3		34.0
36.0	1.6	1.8					1.3	1.6					1.5			2.2	2.4	2.6					1.5			36.0
38.0	1.2	1.3														1.8	1.9	2.1								38.0
40.0																1.4	1.6	1.7								40.0
44.0																										44.0
48.0																										48.0
52.0																										52.0
56.0																										56.0
60.0																										60.0
64.0																										64.0
68.0																										68.0
72.0																										72.0
1	46	46	46	46	46	92	92	92	92	92	92	92	92	92	92	0	0	0	0	0	92	92	92	92	92	1
2	46	46	46	46	46	46	46	46	46	46	92	92	92	92	92	46	46	46	46	46	92	92	92	92	92	2
3	46	46	46	46	46	46	46	46	46	46	46	46	46	46	46	92	92	92	92	92	92	92	92	92	92	3
4	46	46	46	46	46	46	46	46	46	46	46	46	46	46	46	92	92	92	92	92	46	46	46	46	46	4
5	46	46	46	46	46	46	46	46	46	46	46	46	46	46	46	92	92	92	92	92	46	46	46	46	46	5
ID	49	49	49	49	49	50	50	50	50	50	42	42	42	42	42	21	21	21	21	21	38	38	38	38	38	ID
[DEG]	35~83	37~85	44~85	60~85	74~85	49~83	48~85	50~85	58~85	76~85	56~83	55~85	55~85	59~85	75~85	46~83	47~85	49~85	59~85	75~85	59~83	59~85	58~85	60~85	75~85	[DEG]
	1	1	1	1	1	1	1	1	1	1	1	1	1	1	1	1	1	1	1	1	1	1	1	1	1	
	8.7t	8.7t	8.7t	8.7t	8.7t	8.7t	8.7t	8.7t	8.7t	8.7t	8.7t	8.7t	8.7t	8.7t	8.7t	8.7t	8.7t	8.7t	8.7t	8.7t	8.7t	8.7t	8.7t	8.7t	8.7t	

フルオートラフィングジブ

FLJ	1.6m + 12.4m	25.4 t	8.0m x 5.0m	360 °	JPN

m	47.4	47.4	47.4	47.4	47.4	51.7	51.7	51.7	51.7	51.7	51.7	51.7	51.7	51.7	51.7	56.0	56.0	56.0	56.0	56.0	60.0	60.0	60.0	60.0	60.0	m
°	5	15	30	45	60	5	15	30	45	60	5	15	30	45	60	5	15	30	45	60	5	15	30	45	60	°
m 3.0																										3.0
3.5																										3.5
4.0																										4.0
4.5																										4.5
5.0																										5.0
6.0																										6.0
7.0																										7.0
8.0																										8.0
9.0																										9.0
10.0	4.3																									10.0
11.0	4.3	4.3				4.3					4.3															11.0
12.0	4.3	4.3				4.3	4.3				4.3	4.3				4.3										12.0
14.0	4.3	4.3	4.1			4.3	4.3				4.3	4.3				4.3	4.3				3.3	3.3				14.0
16.0	4.3	4.3	4.0	3.3		4.3	4.3	3.9			4.3	4.3	3.9			4.3	4.3	3.8			3.3	3.3				16.0
18.0	4.3	4.3	3.8	3.2	2.4	4.3	4.3	3.8	3.2	2.4	4.3	4.3	3.7	3.2	2.4	4.3	4.3	3.7	3.2		3.3	3.3	3.3			18.0
20.0	4.3	4.3	3.7	3.1	2.3	4.3	4.3	3.7	3.1	2.3	4.3	4.3	3.6	3.1	2.3	4.3	4.3	3.6	3.1	2.3	3.3	3.3	3.3	3.1	2.3	20.0
22.0	4.3	4.3	3.5	3.0	2.3	4.3	4.3	3.5	3.0	2.3	4.3	4.2	3.5	3.0	2.3	4.3	4.2	3.5	3.1	2.3	3.3	3.3	3.3	3.0	2.3	22.0
24.0	4.3	4.1	3.4	2.9		4.3	4.1	3.4	2.9		4.3	4.0	3.4	2.9		4.3	4.0	3.4	3.0	2.3	3.3	3.3	3.3	3.0	2.3	24.0
26.0	4.3	3.9	3.3	2.8		4.1	3.9	3.3	2.9		4.3	3.9	3.2	2.9		4.3	3.9	3.2	2.9		3.3	3.3	3.2	2.9		26.0
28.0	3.7	3.8	3.2	2.8		3.3	3.7	3.2	2.8		3.9	3.7	3.2	2.8		3.5	3.7	3.2	2.9		3.3	3.3	3.1	2.8		28.0
30.0	3.0	3.3	3.1	2.7		2.7	3.0	3.1	2.8		3.2	3.5	3.1	2.8		2.8	3.2	3.1	2.8		2.8	3.1	3.0	2.8		30.0
32.0	2.5	2.7	3.0	2.7		2.1	2.4	2.8	2.7		2.6	2.9	3.0	2.7		2.2	2.5	2.9	2.7		2.2	2.5	2.9	2.7		32.0
34.0	1.9	2.2	2.5	2.6			1.8	2.2	2.4		2.1	2.3	2.7	2.7		1.7	2.0	2.4	2.6			2.0	2.3	2.6		34.0
36.0	1.5	1.7	2.0					1.7	1.9		1.6	1.9	2.1	2.3				1.8	2.1					2.1		36.0
38.0			1.5									1.4	1.7						1.6							38.0
40.0																										40.0
44.0																										44.0
48.0																										48.0
52.0																										52.0
56.0																										56.0
60.0																										60.0
64.0																										64.0
68.0																										68.0
72.0																										72.0
% 1	46	46	46	46	46	92	92	92	92	92	46	46	46	46	46	92	92	92	92	92	100	100	100	100	100	1
2	92	92	92	92	92	92	92	92	92	92	92	92	92	92	92	92	92	92	92	92	100	100	100	100	100	2
3	92	92	92	92	92	92	92	92	92	92	92	92	92	92	92	92	92	92	92	92	100	100	100	100	100	3
4	92	92	92	92	92	92	92	92	92	92	92	92	92	92	92	92	92	92	92	92	100	100	100	100	100	4
5	46	46	46	46	46	46	46	46	46	46	92	92	92	92	92	92	92	92	92	92	100	100	100	100	100	5
ID	31	31	31	31	31	32	32	32	32	32	23	23	23	23	23	24	24	24	24	24	16	16	16	16	16	ID
[DEG]	55~83	56~85	56~85	60~85	75~85	62~83	62~85	62~85	63~85	74~85	58~83	58~85	60~85	58~85	74~85	63~83	65~85	65~85	64~85	74~85	67~83	67~85	69~85	68~85	74~85	[DEG]
	1	1	1	1	1	1	1	1	1	1	1	1	1	1	1	1	1	1	1	1	1	1	1	1	1	
	8.7t	8.7t	8.7t	8.7t	8.7t	8.7t	8.7t	8.7t	8.7t	8.7t	8.7t	8.7t	8.7t	8.7t	8.7t	8.7t	8.7t	8.7t	8.7t	8.7t	8.7t	8.7t	8.7t	8.7t	8.7t	

FLJ	1.6m + 17.4m	25.4 t	8.0m x 5.0m	360 °	JPN

m	12.8	12.8	12.8	12.8	12.8	25.8	25.8	25.8	25.8	25.8	30.1	30.1	30.1	30.1	30.1	30.1	30.1	30.1	30.1	30.1	34.4	34.4	34.4	34.4	34.4	m
°	5	15	30	45	60	5	15	30	45	60	5	15	30	45	60	5	15	30	45	60	5	15	30	45	60	°
m 3.0																										3.0
3.5																										3.5
4.0																										4.0
4.5																										4.5
5.0	3.3																									5.0
6.0	3.3																									6.0
7.0	3.3																									7.0
8.0	3.3	3.3				3.3					3.3					3.3										8.0
9.0	3.3	3.3				3.3	3.3				3.3					3.3					3.3					9.0
10.0	3.3	3.3				3.3	3.3				3.3	3.3				3.3	3.3				3.3					10.0
11.0	3.3	3.3				3.3	3.3				3.3	3.3				3.3	3.3				3.3	3.3				11.0
12.0	3.3	3.2	2.6			3.3	3.3				3.3	3.3				3.3	3.3				3.3	3.3				12.0
14.0	3.3	2.9	2.4			3.3	3.2	2.6			3.3	3.3	2.7			3.3	3.2	2.6			3.3	3.3				14.0
16.0	2.9	2.6	2.2	1.8		3.3	3.0	2.5			3.3	3.1	2.5			3.3	3.0	2.5			3.3	3.1	2.5			16.0
18.0	2.5	2.3	2.0	1.7		3.3	2.8	2.3	1.9		3.3	2.9	2.4	1.9		3.3	2.9	2.4	1.9		3.3	2.9	2.4	1.9		18.0
20.0	2.3	2.1	1.8	1.6		3.1	2.6	2.2	1.8		3.2	2.7	2.2	1.8	1.5	3.2	2.7	2.2	1.8	1.5	3.3	2.8	2.3	1.8	1.5	20.0
22.0	2.0	1.9	1.7			2.9	2.5	2.0	1.7		3.0	2.6	2.1	1.7	1.5	3.0	2.6	2.1	1.7	1.5	3.1	2.6	2.2	1.8	1.5	22.0
24.0	1.8	1.8	1.6			2.7	2.4	1.9	1.6		2.8	2.5	2.0	1.7		2.8	2.4	2.0	1.7		2.9	2.5	2.1	1.7		24.0
26.0	1.7	1.6				2.5	2.2	1.8	1.6		2.7	2.3	1.9	1.6		2.6	2.3	1.9	1.6		2.7	2.4	2.0	1.6		26.0
28.0	1.5					2.3	2.1	1.7	1.5		2.5	2.2	1.8	1.6		2.5	2.2	1.8	1.6		2.6	2.3	1.9	1.6		28.0
30.0						2.1	1.9	1.7			2.4	2.1	1.7	1.5		2.4	2.1	1.7	1.5		2.5	2.2	1.8	1.5		30.0
32.0						2.0	1.8	1.6			2.2	2.0	1.7			2.2	2.0	1.7			2.4	2.1	1.7	1.5		32.0
34.0						1.8	1.7				1.9	1.9	1.6			2.0	1.9	1.6			2.0	2.0	1.7			34.0
36.0						1.7	1.7				1.4	1.7	1.6			1.9	1.8	1.6			1.6	1.8	1.6			36.0
38.0						1.6	1.6					1.2				1.6	1.7					1.4	1.6			38.0
40.0						1.2										1.3	1.4									40.0
44.0																										44.0
48.0																										48.0
52.0																										52.0
56.0																										56.0
60.0																										60.0
64.0																										64.0
68.0																										68.0
72.0																										72.0
% 1	0	0	0	0		46	46	46	46		92	92	92	92	92	46	46	46	46	46	92	92	92	92	92	1
2	0	0	0	0		46	46	46	46		46	46	46	46	46	46	46	46	46	46	46	46	46	46	46	2
3	0	0	0	0		46	46	46	46		46	46	46	46	46	46	46	46	46	46	46	46	46	46	46	3
4	0	0	0	0		0	0	0	0		0	0	0	0	0	46	46	46	46	46	46	46	46	46	46	4
5	0	0	0	0		0	0	0	0		0	0	0	0	0	0	0	0	0	0	0	0	0	0	0	5
ID	1	1	1	1		66	66	66	66		67	67	67	67	67	54	54	54	54	54	55	55	55	55	55	ID
[DEG]	0~83	0~85	0~85	0~85		20~83	30~85	44~85	60~85		41~83	40~85	43~85	57~85	73~85	32~83	35~85	43~85	57~85	73~85	47~83	46~85	46~85	58~85	75~85	[DEG]
	1	1	1	1		1	1	1	1		1	1	1	1	1	1	1	1	1	1	1	1	1	1	1	
	8.7t	8.7t	8.7t	8.7t		8.7t	8.7t	8.7t	8.7t		8.7t	8.7t	8.7t	8.7t	8.7t	8.7t	8.7t	8.7t	8.7t	8.7t	8.7t	8.7t	8.7t	8.7t	8.7t	

FLJ	1.6m + 17.4m	25.4 t	8.0m x 5.0m	360 °	JPN

m	34.4	34.4	34.4	34.4	34.4	38.7	38.7	38.7	38.7	38.7	43.0	43.0	43.0	43.0	43.0	43.0	43.0	43.0	43.0	43.0	47.4	47.4	47.4	47.4	47.4	m
°	5	15	30	45	60	5	15	30	45	60	5	15	30	45	60	5	15	30	45	60	5	15	30	45	60	°
3.0																										3.0
3.5																										3.5
4.0																										4.0
4.5																										4.5
5.0																										5.0
6.0																										6.0
7.0																										7.0
8.0																										8.0
9.0	3.3																									9.0
10.0	3.3					3.3																				10.0
11.0	3.3	3.3				3.3					3.3					2.9										11.0
12.0	3.3	3.3				3.3	3.3				3.3	3.3				2.9					3.2					12.0
14.0	3.3	3.2				3.3	3.3				3.3	3.2				2.9	2.9				3.2	3.2				14.0
16.0	3.3	3.0	2.5			3.3	3.1	2.5			3.3	3.1				2.9	2.9				3.2	3.1				16.0
18.0	3.3	2.9	2.4	1.9		3.3	2.9	2.4			3.3	2.9	2.4			2.9	2.8	2.3			3.2	2.9	2.4			18.0
20.0	3.2	2.7	2.3	1.8	1.5	3.3	2.8	2.3	1.9		3.3	2.8	2.3	1.9		2.9	2.7	2.2	1.9		3.2	2.8	2.3			20.0
22.0	3.0	2.6	2.2	1.8	1.5	3.1	2.6	2.2	1.8	1.5	3.1	2.7	2.2	1.8	1.5	2.9	2.6	2.2	1.8	1.5	3.1	2.7	2.2	1.8		22.0
24.0	2.9	2.5	2.1	1.7		2.9	2.5	2.1	1.7	1.5	3.0	2.5	2.1	1.8	1.5	2.9	2.5	2.1	1.8	1.5	3.0	2.5	2.1	1.8	1.5	24.0
26.0	2.7	2.4	2.0	1.6		2.8	2.4	2.1	1.7		2.8	2.4	2.1	1.7		2.7	2.4	2.0	1.7		2.9	2.4	2.1	1.7	1.4	26.0
28.0	2.6	2.3	1.9	1.6		2.7	2.3	2.0	1.6		2.7	2.3	2.0	1.6		2.6	2.3	2.0	1.6		2.7	2.4	2.0	1.7		28.0
30.0	2.5	2.2	1.8	1.5		2.5	2.2	1.9	1.6		2.6	2.3	1.9	1.6		2.5	2.2	1.9	1.6		2.6	2.3	1.9	1.6		30.0
32.0	2.4	2.1	1.7	1.5		2.4	2.1	1.8	1.5		2.5	2.2	1.9	1.6		2.4	2.1	1.8	1.6		2.5	2.2	1.9	1.6		32.0
34.0	2.3	2.0	1.7			2.2	2.1	1.7	1.5		2.0	2.1	1.8	1.5		2.3	2.0	1.8	1.5		2.0	2.1	1.8	1.6		34.0
36.0	2.1	1.9	1.6			1.7	2.0	1.7			1.6	1.9	1.7	1.5		2.2	2.0	1.7	1.5		1.5	1.9	1.8	1.5		36.0
38.0	1.8	1.8	1.6			1.3	1.6	1.6				1.4	1.7			2.2	1.9	1.7				1.4	1.7	1.5		38.0
40.0	1.4	1.6						1.5					1.4			1.9	1.9	1.6					1.4			40.0
44.0																1.2	1.4	1.6								44.0
48.0																										48.0
52.0																										52.0
56.0																										56.0
60.0																										60.0
64.0																										64.0
68.0																										68.0
72.0																										72.0
1	46	46	46	46	46	92	92	92	92	92	92	92	92	92	92	0	0	0	0	0	92	92	92	92	92	1
2	46	46	46	46	46	46	46	46	46	46	92	92	92	92	92	46	46	46	46	46	92	92	92	92	92	2
3	46	46	46	46	46	46	46	46	46	46	46	46	46	46	46	92	92	92	92	92	92	92	92	92	92	3
4	46	46	46	46	46	46	46	46	46	46	46	46	46	46	46	92	92	92	92	92	46	46	46	46	46	4
5	46	46	46	46	46	46	46	46	46	46	46	46	46	46	46	92	92	92	92	92	46	46	46	46	46	5
ID	49	49	49	49	49	50	50	50	50	50	42	42	42	42	42	21	21	21	21	21	38	38	38	38	38	ID
[DEG]	40~83	43~85	46~85	58~85	75~85	49~83	51~85	51~85	59~85	74~85	55~83	55~85	56~85	57~85	74~85	46~83	48~85	51~85	58~85	74~85	59~83	59~85	59~85	61~85	73~85	[DEG]
	1	1	1	1	1	1	1	1	1	1	1	1	1	1	1	1	1	1	1	1	1	1	1	1	1	
	8.7t	8.7t	8.7t	8.7t	8.7t	8.7t	8.7t	8.7t	8.7t	8.7t	8.7t	8.7t	8.7t	8.7t	8.7t	8.7t	8.7t	8.7t	8.7t	8.7t	8.7t	8.7t	8.7t	8.7t	8.7t	

m	47.4	47.4	47.4	47.4	47.4	51.7	51.7	51.7	51.7	51.7	51.7	51.7	51.7	51.7	51.7	56.0	56.0	56.0	56.0	56.0	60.0	60.0	60.0	60.0	60.0	m
°	5	15	30	45	60	5	15	30	45	60	5	15	30	45	60	5	15	30	45	60	5	15	30	45	60	°
3.0																										3.0
3.5																										3.5
4.0																										4.0
4.5																										4.5
5.0																										5.0
6.0																										6.0
7.0																										7.0
8.0																										8.0
9.0																										9.0
10.0																										10.0
11.0																										11.0
12.0	3.1																									12.0
14.0	3.1	3.1				3.2	3.1				3.2	3.0				2.9										14.0
16.0	3.1	3.0				3.2	3.0				3.1	2.9				2.9	2.9				2.8	2.7				16.0
18.0	3.1	2.9	2.4			3.2	2.9				3.1	2.8				2.9	2.8				2.8	2.6				18.0
20.0	3.1	2.7	2.3			3.1	2.7	2.3			3.0	2.7	2.2			2.9	2.7	2.2			2.8	2.6				20.0
22.0	3.1	2.6	2.2	1.8		3.1	2.6	2.2	1.8		2.9	2.6	2.2	1.8		2.9	2.6	2.2			2.7	2.5	2.1			22.0
24.0	2.9	2.5	2.1	1.8	1.5	2.9	2.5	2.1	1.8	1.5	2.9	2.5	2.1	1.8	1.5	2.8	2.5	2.1	1.8		2.7	2.5	2.1	1.8		24.0
26.0	2.8	2.4	2.0	1.7	1.4	2.8	2.4	2.1	1.7	1.4	2.8	2.4	2.0	1.7	1.4	2.8	2.4	2.0	1.8	1.4	2.6	2.4	2.0	1.8	1.4	26.0
28.0	2.7	2.3	2.0	1.7		2.7	2.3	2.0	1.7	1.4	2.7	2.3	2.0	1.7	1.4	2.7	2.3	2.0	1.7	1.4	2.6	2.3	2.0	1.7	1.4	28.0
30.0	2.6	2.2	1.9	1.6		2.6	2.3	1.9	1.6		2.6	2.2	1.9	1.6		2.6	2.2	1.9	1.7		2.5	2.2	1.9	1.7	1.4	30.0
32.0	2.5	2.2	1.9	1.6		2.5	2.2	1.9	1.6		2.5	2.2	1.9	1.6		2.5	2.2	1.9	1.6		2.5	2.2	1.8	1.6		32.0
34.0	2.4	2.1	1.8	1.6		2.1	2.1	1.8	1.6		2.4	2.1	1.8	1.6		2.2	2.1	1.8	1.6		2.1	2.1	1.8	1.6		34.0
36.0	2.0	2.0	1.8	1.5		1.6	1.9	1.8	1.5		2.1	2.0	1.7	1.5		1.7	2.0	1.8	1.6			2.0	1.7	1.6		36.0
38.0	1.6	1.8	1.7	1.5			1.5	1.7	1.5		1.7	2.0	1.7	1.5			1.6	1.7	1.5				1.7	1.5		38.0
40.0		1.5	1.7					1.5	1.5			1.6	1.7	1.5				1.6	1.5					1.5		40.0
44.0																										44.0
48.0																										48.0
52.0																										52.0
56.0																										56.0
60.0																										60.0
64.0																										64.0
68.0																										68.0
72.0																										72.0
1	46	46	46	46	46	92	92	92	92	92	46	46	46	46	46	92	92	92	92	92	100	100	100	100	100	1
2	92	92	92	92	92	92	92	92	92	92	92	92	92	92	92	92	92	92	92	92	100	100	100	100	100	2
3	92	92	92	92	92	92	92	92	92	92	92	92	92	92	92	92	92	92	92	92	100	100	100	100	100	3
4	92	92	92	92	92	92	92	92	92	92	92	92	92	92	92	92	92	92	92	92	100	100	100	100	100	4
5	46	46	46	46	46	46	46	46	46	46	92	92	92	92	92	92	92	92	92	92	100	100	100	100	100	5
ID	31	31	31	31	31	32	32	32	32	32	23	23	23	23	23	24	24	24	24	24	16	16	16	16	16	ID
[DEG]	57~83	57~85	59~85	61~85	73~85	62~83	62~85	62~85	64~85	73~85	60~83	60~85	63~85	59~85	73~85	64~83	64~85	65~85	67~85	73~85	68~83	68~85	69~85	69~85	73~85	[DEG]
	1	1	1	1	1	1	1	1	1	1	1	1	1	1	1	1	1	1	1	1	1	1	1	1	1	
	8.7t	8.7t	8.7t	8.7t	8.7t	8.7t	8.7t	8.7t	8.7t	8.7t	8.7t	8.7t	8.7t	8.7t	8.7t	8.7t	8.7t	8.7t	8.7t	8.7t	8.7t	8.7t	8.7t	8.7t	8.7t	

フルオートラフィングジブ

FLJ	1.6m + 7.4m	15.4 t	8.0m x 7.5m	360 °	JPN

m	12.8	12.8	12.8	12.8	12.8	25.8	25.8	25.8	25.8	25.8	30.1	30.1	30.1	30.1	30.1	30.1	30.1	30.1	30.1	30.1	34.4	34.4	34.4	34.4	34.4	m
°	5	15	30	45	60	5	15	30	45	60	5	15	30	45	60	5	15	30	45	60	5	15	30	45	60	°
3.0	7.3																									3.0
3.5	7.3	7.3																								3.5
4.0	7.3	7.3				7.3																				4.0
4.5	7.3	7.3				7.3																				4.5
5.0	7.3	7.3				7.3	7.3				7.3					7.3										5.0
6.0	7.3	7.3	7.3			7.3	7.3				7.3	7.3				7.3	7.3				7.3	7.3				6.0
7.0	7.3	7.3	7.3	5.9		7.3	7.3	7.3			7.3	7.3	7.3			7.3	7.3	7.3			7.3	7.3				7.0
8.0	7.3	7.3	7.0	5.7		7.3	7.3	7.3	6.2		7.3	7.3	7.3			7.3	7.3	7.3			7.3	7.3	7.3			8.0
9.0	7.3	7.3	6.6	5.5		7.3	7.3	7.3	6.0	4.5	7.3	7.3	7.3	6.1		7.3	7.3	7.3	6.1		7.3	7.3	7.3	6.2		9.0
10.0	7.3	7.3	6.3	5.4		7.3	7.3	7.3	5.9	4.5	7.3	7.3	7.3	6.0	4.5	7.3	7.3	7.3	6.0	4.5	7.3	7.3	7.3	6.1	4.5	10.0
11.0	7.3	7.0	6.1	5.2		7.3	7.3	7.3	5.8	4.4	7.3	7.3	7.3	5.9	4.5	7.3	7.3	7.3	5.9	4.5	7.3	7.3	7.3	6.0	4.5	11.0
12.0	7.1	6.5	5.8			7.3	7.3	7.0	5.6		7.3	7.3	7.3	5.8	4.4	7.3	7.3	7.3	5.8	4.4	7.3	7.3	7.3	5.9	4.4	12.0
14.0	6.1	5.9	5.4			7.3	7.3	6.6	5.4		7.3	7.3	6.9	5.6		7.3	7.3	6.9	5.6		7.3	7.3	7.2	5.7	4.4	14.0
16.0	5.4	5.3				7.3	7.3	6.2	5.2		7.3	7.3	6.5	5.4		7.3	7.3	6.5	5.4		7.3	7.3	6.8	5.5		16.0
18.0	4.9					7.3	6.9	5.9	5.1		7.3	7.3	6.2	5.2		7.3	7.3	6.2	5.2		7.3	7.3	6.5	5.3		18.0
20.0						7.1	6.4	5.7			7.3	7.0	5.9	5.1		7.3	7.0	5.9	5.1		7.3	7.3	6.2	5.2		20.0
22.0						6.5	6.0	5.4			6.4	6.6	5.7			7.3	6.6	5.7			6.7	7.1	6.0	5.1		22.0
24.0						5.7	5.7	5.3			5.1	5.4	5.5			6.0	6.2	5.5			5.4	5.7	5.7			24.0
26.0						4.6	4.7				4.0	4.2	4.5			4.8	5.0	5.2			4.3	4.5	4.8			26.0
28.0						3.7	3.8				3.1	3.3				3.9	4.1				3.4	3.6	3.8			28.0
30.0						2.9					2.3	2.5				3.1	3.3				2.6	2.8	3.0			30.0
32.0											1.6	1.7				2.5	2.6				1.9	2.1				32.0
34.0																1.9					1.3	1.4				34.0
36.0																										36.0
38.0																										38.0
40.0																										40.0
44.0																										44.0
48.0																										48.0
52.0																										52.0
56.0																										56.0
60.0																										60.0
64.0																										64.0
68.0																										68.0
72.0																										72.0
1	0	0	0	0		46	46	46	46	46	92	92	92	92	92	46	46	46	46	46	92	92	92	92	92	1
2	0	0	0	0		46	46	46	46	46	46	46	46	46	46	46	46	46	46	46	46	46	46	46	46	2
3	0	0	0	0		46	46	46	46	46	46	46	46	46	46	46	46	46	46	46	46	46	46	46	46	3
4	0	0	0	0		0	0	0	0	0	0	0	0	0	0	46	46	46	46	46	46	46	46	46	46	4
5	0	0	0	0		0	0	0	0	0	0	0	0	0	0	0	0	0	0	0	0	0	0	0	0	5
ID	1	1	1	1		66	66	66	66	66	67	67	67	67	67	54	54	54	54	54	55	55	55	55	55	ID
[DEG]	0~83	0~85	0~85	0~85		22~83	31~85	45~85	61~85	74~85	30~83	31~85	43~85	62~85	77~85	22~83	31~85	43~85	61~85	77~85	35~83	36~85	46~85	59~85	76~85	[DEG]
	1	1	1	1		1	1	1	1	1	1	1	1	1	1	1	1	1	1	1	1	1	1	1	1	
	8.7t	8.7t	8.7t	8.7t		8.7t	8.7t	8.7t	8.7t	8.7t	8.7t	8.7t	8.7t	8.7t	8.7t	8.7t	8.7t	8.7t	8.7t	8.7t	8.7t	8.7t	8.7t	8.7t	8.7t	

m	34.4	34.4	34.4	34.4	34.4	38.7	38.7	38.7	38.7	38.7	43.0	43.0	43.0	43.0	43.0	43.0	43.0	43.0	43.0	43.0	47.4	47.4	47.4	47.4	47.4	m
°	5	15	30	45	60	5	15	30	45	60	5	15	30	45	60	5	15	30	45	60	5	15	30	45	60	°
3.0																										3.0
3.5																										3.5
4.0																										4.0
4.5																										4.5
5.0																										5.0
6.0	7.3	7.3																								6.0
7.0	7.3	7.3				7.3	7.3																			7.0
8.0	7.3	7.3	7.3			7.3	7.3				7.3	7.3				7.3	7.3					7.3				8.0
9.0	7.3	7.3	7.3	6.2		7.3	7.3	7.3			7.3	7.3	7.3			7.3	7.3				7.3	7.3				9.0
10.0	7.3	7.3	7.3	6.1	4.5	7.3	7.3	7.3	6.2		7.3	7.3	7.3			7.3	7.3	7.3			7.3	7.3	7.3			10.0
11.0	7.3	7.3	7.3	6.0	4.5	7.3	7.3	7.3	6.1	4.5	7.3	7.3	7.3	6.1	4.5	7.3	7.3	7.3	6.1		7.3	7.3	7.3			11.0
12.0	7.3	7.3	7.3	5.9	4.4	7.3	7.3	7.3	6.0	4.5	7.3	7.3	7.3	6.0	4.5	7.3	7.3	7.3	6.0	4.5	7.3	7.3	7.3	6.1	4.5	12.0
14.0	7.3	7.3	7.2	5.7	4.4	7.3	7.3	7.3	5.8	4.4	7.3	7.3	7.3	5.8	4.4	7.3	7.3	7.3	5.8	4.4	7.3	7.3	7.3	5.9	4.4	14.0
16.0	7.3	7.3	6.8	5.5		7.3	7.3	7.0	5.6		7.3	7.3	7.3	5.7	4.4	7.3	7.3	7.3	5.7	4.4	7.3	7.3	7.3	5.8	4.4	16.0
18.0	7.3	7.3	6.5	5.3		7.3	7.3	6.7	5.4		7.3	7.3	6.9	5.5		7.3	7.3	6.9	5.5		7.3	7.3	7.1	5.6		18.0
20.0	7.3	7.3	6.2	5.2		7.3	7.3	6.4	5.3		7.3	7.3	6.7	5.4		7.3	7.3	6.7	5.4		7.3	7.3	6.9	5.5		20.0
22.0	7.3	7.1	6.0	5.1		7.1	7.3	6.2	5.2		7.0	7.3	6.4	5.3		7.3	7.3	6.4	5.3		7.1	7.3	6.6	5.4		22.0
24.0	6.3	6.6	5.7			5.8	6.1	6.0	5.1		5.7	5.9	6.2	5.2		6.8	6.7	6.2	5.2		5.7	6.0	6.4	5.3		24.0
26.0	5.2	5.4	5.6			4.7	4.9	5.2			4.6	4.8	5.1	5.1		6.0	6.1	6.0	5.1		4.6	4.9	5.2	5.2		26.0
28.0	4.3	4.4	4.6			3.8	4.0	4.2			3.6	3.9	4.1			5.1	5.2	5.4			3.7	3.9	4.2	4.4		28.0
30.0	3.5	3.6	3.8			3.0	3.2	3.4			2.9	3.1	3.3			4.3	4.4	4.6			2.9	3.1	3.4			30.0
32.0	2.8	2.9				2.3	2.5	2.6			2.2	2.4	2.6			3.6	3.7	3.9			2.2	2.4	2.6			32.0
34.0	2.2	2.3				1.7	1.8				1.6	1.7	1.9			3.0	3.1	3.2			1.6	1.8	2.0			34.0
36.0	1.7	1.8														2.5	2.6	2.7					1.4			36.0
38.0																2.0	2.1									38.0
40.0																1.6	1.7									40.0
44.0																										44.0
48.0																										48.0
52.0																										52.0
56.0																										56.0
60.0																										60.0
64.0																										64.0
68.0																										68.0
72.0																										72.0
1	46	46	46	46	46	92	92	92	92	92	92	92	92	92	92	0	0	0	0	0	92	92	92	92	92	1
2	46	46	46	46	46	46	46	46	46	46	92	92	92	92	92	46	46	46	46	46	92	92	92	92	92	2
3	46	46	46	46	46	46	46	46	46	46	46	46	46	46	46	92	92	92	92	92	92	92	92	92	92	3
4	46	46	46	46	46	46	46	46	46	46	46	46	46	46	46	92	92	92	92	92	46	46	46	46	46	4
5	46	46	46	46	46	46	46	46	46	46	46	46	46	46	46	92	92	92	92	92	46	46	46	46	46	5
ID	49	49	49	49	49	50	50	50	50	50	42	42	42	42	42	21	21	21	21	21	38	38	38	38	38	ID
[DEG]	29~83	30~85	46~85	59~85	75~85	42~83	44~85	45~85	60~85	75~85	48~83	49~85	50~85	61~85	74~85	38~83	39~85	44~85	61~85	74~85	53~83	54~85	52~85	59~85	74~85	[DEG]
	1	1	1	1	1	1	1	1	1	1	1	1	1	1	1	1	1	1	1	1	1	1	1	1	1	
	8.7t	8.7t	8.7t	8.7t	8.7t	8.7t	8.7t	8.7t	8.7t	8.7t	8.7t	8.7t	8.7t	8.7t	8.7t	8.7t	8.7t	8.7t	8.7t	8.7t	8.7t	8.7t	8.7t	8.7t	8.7t	

FLJ	1.6m + 7.4m	15.4 t	8.0m x 7.5m	360 °	JPN

m	47.4	47.4	47.4	47.4	47.4	51.7	51.7	51.7	51.7	51.7	51.7	51.7	51.7	51.7	51.7	56.0	56.0	56.0	56.0	56.0	60.0	60.0	60.0	60.0	60.0	m
°	5	15	30	45	60	5	15	30	45	60	5	15	30	45	60	5	15	30	45	60	5	15	30	45	60	°
3.0																										3.0
3.5																										3.5
4.0																										4.0
4.5																										4.5
5.0																										5.0
6.0																										6.0
7.0																										7.0
8.0		7.3																								8.0
9.0	7.3	7.3					7.3					6.4														9.0
10.0	7.3	7.3	7.3			7.3	7.3				6.4	6.4					6.3									10.0
11.0	7.3	7.3	7.3			7.3	7.3	7.3			6.4	6.4	6.4			6.3	6.3					5.3				11.0
12.0	7.3	7.3	7.3	6.1	4.5	7.3	7.3	7.3			6.4	6.4	6.4			6.3	6.3	6.3			5.3	5.3				12.0
14.0	7.3	7.3	7.3	5.9	4.4	7.3	7.3	7.3	6.0	4.5	6.4	6.4	6.4	6.0	4.5	6.3	6.3	6.3	6.0	4.5	5.3	5.3	5.3			14.0
16.0	7.3	7.3	7.3	5.8	4.4	7.3	7.3	7.3	5.8	4.4	6.4	6.4	6.4	5.8	4.4	6.3	6.3	6.3	5.9	4.4	5.3	5.3	5.3	5.3	4.4	16.0
18.0	7.3	7.3	7.1	5.6		7.3	7.3	7.3	5.7	4.3	6.4	6.4	6.4	5.7	4.3	6.3	6.3	6.3	5.7	4.4	5.3	5.3	5.3	5.3	4.4	18.0
20.0	7.3	7.3	6.9	5.5		7.3	7.3	7.0	5.5		6.4	6.4	6.4	5.5		6.3	6.3	6.3	5.6		5.3	5.3	5.3	5.3	4.3	20.0
22.0	7.3	7.3	6.6	5.4		7.2	7.3	6.8	5.4		6.4	6.4	6.4	5.4		6.3	6.3	6.3	5.5		5.3	5.3	5.3	5.3		22.0
24.0	6.3	6.6	6.4	5.3		5.9	6.2	6.5	5.3		6.4	6.4	6.4	5.3		6.1	6.3	6.3	5.4		5.3	5.3	5.3	5.3		24.0
26.0	5.2	5.4	5.7	5.2		4.8	5.0	5.4	5.2		5.4	5.6	6.0	5.2		5.0	5.3	5.6	5.3		5.0	5.2	5.1	5.0		26.0
28.0	4.3	4.5	4.7	4.9		3.9	4.1	4.4	4.6		4.5	4.7	5.0	5.1		4.1	4.3	4.6	4.8		4.0	4.3	4.6	4.7		28.0
30.0	3.5	3.7	3.9			3.1	3.3	3.5	3.7		3.7	3.9	4.1	4.3		3.3	3.5	3.8	3.9		3.3	3.5	3.7	3.9		30.0
32.0	2.8	3.0	3.2			2.4	2.6	2.8			3.0	3.2	3.4			2.6	2.8	3.0	3.2		2.6	2.8	3.0	3.2		32.0
34.0	2.2	2.4	2.5			1.8	2.0	2.2			2.4	2.6	2.8			2.0	2.2	2.4			2.0	2.2	2.4	2.5		34.0
36.0	1.7	1.8	2.0					1.6			1.9	2.0	2.2				1.7	1.9					1.8			36.0
38.0		1.3	1.4								1.4	1.5	1.7													38.0
40.0																										40.0
44.0																										44.0
48.0																										48.0
52.0																										52.0
56.0																										56.0
60.0																										60.0
64.0																										64.0
68.0																										68.0
72.0																										72.0
1	46	46	46	46	46	92	92	92	92	92	46	46	46	46	46	92	92	92	92	92	100	100	100	100	100	1
2	92	92	92	92	92	92	92	92	92	92	92	92	92	92	92	92	92	92	92	92	100	100	100	100	100	2
3	92	92	92	92	92	92	92	92	92	92	92	92	92	92	92	92	92	92	92	92	100	100	100	100	100	3
4	92	92	92	92	92	92	92	92	92	92	92	92	92	92	92	92	92	92	92	92	100	100	100	100	100	4
5	46	46	46	46	46	46	46	46	46	46	92	92	92	92	92	92	92	92	92	92	100	100	100	100	100	5
ID	31	31	31	31	31	32	32	32	32	32	23	23	23	23	23	24	24	24	24	24	16	16	16	16	16	ID
[DEG]	50~83	48~85	49~85	59~85	74~85	57~83	58~85	56~85	60~85	74~85	52~83	53~85	54~85	60~85	74~85	60~83	59~85	60~85	61~85	74~85	63~83	64~85	63~85	63~85	74~85	[DEG]
	1	1	1	1	1	1	1	1	1	1	1	1	1	1	1	1	1	1	1	1	1	1	1	1	1	
	8.7t	8.7t	8.7t	8.7t	8.7t	8.7t	8.7t	8.7t	8.7t	8.7t	8.7t	8.7t	8.7t	8.7t	8.7t	8.7t	8.7t	8.7t	8.7t	8.7t	8.7t	8.7t	8.7t	8.7t	8.7t	

FLJ	1.6m + 12.4m	15.4 t	8.0m x 7.5m	360 °	JPN

m	12.8	12.8	12.8	12.8	12.8	25.8	25.8	25.8	25.8	25.8	30.1	30.1	30.1	30.1	30.1	30.1	30.1	30.1	30.1	30.1	34.4	34.4	34.4	34.4	34.4	m
°	5	15	30	45	60	5	15	30	45	60	5	15	30	45	60	5	15	30	45	60	5	15	30	45	60	°
3.0																										3.0
3.5	4.3																									3.5
4.0	4.3																									4.0
4.5	4.3																									4.5
5.0	4.3																									5.0
6.0	4.3	4.3				4.3																				6.0
7.0	4.3	4.3				4.3	4.3				4.3					4.3										7.0
8.0	4.3	4.3				4.3	4.3				4.3	4.3				4.3	4.3				4.3	4.3				8.0
9.0	4.3	4.3	4.3			4.3	4.3				4.3	4.3				4.3	4.3				4.3	4.3				9.0
10.0	4.3	4.3	4.1			4.3	4.3	4.3			4.3	4.3				4.3	4.3				4.3	4.3				10.0
11.0	4.3	4.3	3.9	3.2		4.3	4.3	4.3			4.3	4.3	4.3			4.3	4.3	4.3			4.3	4.3	4.3			11.0
12.0	4.3	4.3	3.7	3.1		4.3	4.3	4.3	3.3		4.3	4.3	4.3			4.3	4.3	4.3			4.3	4.3	4.3			12.0
14.0	4.1	3.8	3.4	2.9		4.3	4.3	4.0	3.2	2.4	4.3	4.3	4.2	3.2	2.4	4.3	4.3	4.2	3.2	2.4	4.3	4.3	4.3	3.3		14.0
16.0	3.6	3.4	3.1	2.7		4.3	4.3	3.7	3.0	2.4	4.3	4.3	3.9	3.1	2.4	4.3	4.3	3.9	3.1	2.4	4.3	4.3	4.0	3.1	2.4	16.0
18.0	3.2	3.1	2.9			4.3	4.2	3.5	2.9		4.3	4.3	3.7	3.0		4.3	4.3	3.7	3.0		4.3	4.3	3.8	3.0	2.3	18.0
20.0	2.9	2.9				4.3	3.9	3.3	2.8		4.3	4.2	3.5	2.9		4.3	4.2	3.5	2.9		4.3	4.3	3.6	2.9		20.0
22.0	2.6	2.7				4.0	3.6	3.1	2.7		4.3	3.9	3.3	2.8		4.3	3.9	3.3	2.8		4.3	4.2	3.4	2.8		22.0
24.0						3.7	3.4	3.0			4.1	3.7	3.1	2.7		4.1	3.7	3.1	2.7		4.3	3.9	3.3	2.8		24.0
26.0						3.4	3.2	2.9			3.8	3.4	3.0			3.8	3.4	3.0			4.1	3.7	3.1	2.7		26.0
28.0						3.1	3.0	2.8			3.5	3.3	2.9			3.5	3.3	2.9			3.8	3.5	3.0			28.0
30.0						2.9	2.8				3.2	3.1	2.8			3.2	3.1	2.8			3.5	3.3	2.9			30.0
32.0						2.7	2.7				2.6	2.8	2.7			3.0	2.9	2.7			2.8	3.0	2.8			32.0
34.0						2.5					2.0	2.2				2.7	2.8				2.2	2.4	2.7			34.0
36.0											1.5	1.6				2.2	2.3				1.7	1.9				36.0
38.0																1.7						1.3				38.0
40.0																										40.0
44.0																										44.0
48.0																										48.0
52.0																										52.0
56.0																										56.0
60.0																										60.0
64.0																										64.0
68.0																										68.0
72.0																										72.0
1	0	0	0	0		46	46	46	46	46	92	92	92	92	92	46	46	46	46	46	92	92	92	92	92	1
2	0	0	0	0		46	46	46	46	46	46	46	46	46	46	46	46	46	46	46	46	46	46	46	46	2
3	0	0	0	0		46	46	46	46	46	46	46	46	46	46	46	46	46	46	46	46	46	46	46	46	3
4	0	0	0	0		0	0	0	0	0	0	0	0	0	0	46	46	46	46	46	46	46	46	46	46	4
5	0	0	0	0		0	0	0	0	0	0	0	0	0	0	0	0	0	0	0	0	0	0	0	0	5
ID	1	1	1	1		66	66	66	66	66	67	67	67	67	67	54	54	54	54	54	55	55	55	55	55	ID
[DEG]	0~83	0~85	0~85	0~85		25~83	27~85	47~85	58~85	76~85	31~83	33~85	46~85	59~85	75~85	17~83	27~85	45~85	59~85	75~85	40~83	38~85	44~85	60~85	74~85	[DEG]
	1	1	1	1		1	1	1	1	1	1	1	1	1	1	1	1	1	1	1	1	1	1	1	1	
	8.7t	8.7t	8.7t	8.7t		8.7t	8.7t	8.7t	8.7t	8.7t	8.7t	8.7t	8.7t	8.7t	8.7t	8.7t	8.7t	8.7t	8.7t	8.7t	8.7t	8.7t	8.7t	8.7t	8.7t	

フルオートラフィングジブ

FLJ	1.6m + 12.4m	15.4 t	8.0m x 7.5m	360 °	JPN

m	34.4	34.4	34.4	34.4	34.4	38.7	38.7	38.7	38.7	38.7	43.0	43.0	43.0	43.0	43.0	43.0	43.0	43.0	43.0	43.0	47.4	47.4	47.4	47.4	47.4	m
°	5	15	30	45	60	5	15	30	45	60	5	15	30	45	60	5	15	30	45	60	5	15	30	45	60	°
3.0																										3.0
3.5																										3.5
4.0																										4.0
4.5																										4.5
5.0																										5.0
6.0																										6.0
7.0	4.3																									7.0
8.0	4.3	4.3				4.3																				8.0
9.0	4.3	4.3				4.3	4.3				4.3					4.3										9.0
10.0	4.3	4.3				4.3	4.3				4.3	4.3				4.3	4.3				4.3					10.0
11.0	4.3	4.3	4.3			4.3	4.3				4.3	4.3				4.3	4.3				4.3	4.3				11.0
12.0	4.3	4.3	4.3			4.3	4.3	4.3			4.3	4.3				4.3	4.3				4.3	4.3				12.0
14.0	4.3	4.3	4.2	3.3		4.3	4.3	4.2	3.3		4.3	4.3	4.2			4.3	4.3	4.1			4.3	4.3	4.2			14.0
16.0	4.3	4.3	4.0	3.1	2.4	4.3	4.3	4.0	3.2	2.4	4.3	4.3	4.0	3.2	2.4	4.3	4.3	3.9	3.2		4.3	4.3	4.0	3.3		16.0
18.0	4.3	4.3	3.8	3.0	2.3	4.3	4.3	3.9	3.1	2.3	4.3	4.3	3.9	3.1	2.4	4.3	4.3	3.7	3.1	2.4	4.3	4.3	3.8	3.2	2.4	18.0
20.0	4.3	4.3	3.6	2.9		4.3	4.3	3.7	3.0	2.3	4.3	4.3	3.7	3.0	2.3	4.3	4.3	3.6	3.0	2.3	4.3	4.3	3.7	3.1	2.3	20.0
22.0	4.3	4.2	3.4	2.8		4.3	4.3	3.6	2.9		4.3	4.3	3.6	2.9		4.3	4.2	3.5	2.9		4.3	4.3	3.6	3.0	2.3	22.0
24.0	4.3	3.9	3.3	2.8		4.3	4.1	3.4	2.8		4.3	4.2	3.5	2.9		4.3	4.0	3.4	2.9		4.3	4.2	3.4	2.9		24.0
26.0	4.1	3.7	3.1	2.7		4.3	3.9	3.3	2.7		4.3	4.0	3.4	2.8		4.3	3.8	3.3	2.8		4.3	4.0	3.4	2.8		26.0
28.0	3.8	3.5	3.0			4.2	3.7	3.1	2.7		4.3	3.8	3.3	2.7		4.2	3.7	3.2	2.7		4.3	3.8	3.3	2.8		28.0
30.0	3.6	3.3	2.9			3.7	3.5	3.0			3.6	3.7	3.1	2.7		4.0	3.5	3.1	2.7		3.6	3.7	3.2	2.7		30.0
32.0	3.3	3.1	2.8			3.0	3.3	2.9			2.9	3.2	3.0			3.9	3.4	3.0			2.9	3.2	3.1	2.7		32.0
34.0	2.9	3.0	2.7			2.4	2.7	2.8			2.3	2.6	2.9			3.5	3.3	2.9			2.3	2.6	2.9	2.6		34.0
36.0	2.4	2.6				1.9	2.1	2.4			1.8	2.0	2.3			3.0	3.2	2.8			1.8	2.0	2.3			36.0
38.0	2.0	2.1				1.4	1.6	1.8				1.5	1.8			2.5	2.7	2.8				1.5	1.8			38.0
40.0	1.5	1.6											1.3			2.1	2.3	2.4								40.0
44.0																1.4	1.5									44.0
48.0																										48.0
52.0																										52.0
56.0																										56.0
60.0																										60.0
64.0																										64.0
68.0																										68.0
72.0																										72.0
1	46	46	46	46	46	92	92	92	92	92	92	92	92	92	92	0	0	0	0	0	92	92	92	92	92	1
2	46	46	46	46	46	46	46	46	46	46	92	92	92	92	92	46	46	46	46	46	92	92	92	92	92	2
3	46	46	46	46	46	46	46	46	46	46	46	46	46	46	46	92	92	92	92	92	92	92	92	92	92	3
4	46	46	46	46	46	46	46	46	46	46	46	46	46	46	46	92	92	92	92	92	46	46	46	46	46	4
5	46	46	46	46	46	46	46	46	46	46	46	46	46	46	46	92	92	92	92	92	46	46	46	46	46	5
ID	49	49	49	49	49	50	50	50	50	50	42	42	42	42	42	21	21	21	21	21	38	38	38	38	38	ID
[DEG]	31~83	33~85	44~85	60~85	74~85	43~83	45~85	43~85	58~85	76~85	51~83	50~85	49~85	59~85	75~85	39~83	41~85	42~85	59~85	75~85	55~83	54~85	56~85	60~85	75~85	[DEG]
	1	1	1	1	1	1	1	1	1	1	1	1	1	1	1	1	1	1	1	1	1	1	1	1	1	
	8.7t	8.7t	8.7t	8.7t	8.7t	8.7t	8.7t	8.7t	8.7t	8.7t	8.7t	8.7t	8.7t	8.7t	8.7t	8.7t	8.7t	8.7t	8.7t	8.7t	8.7t	8.7t	8.7t	8.7t	8.7t	

m	47.4	47.4	47.4	47.4	47.4	51.7	51.7	51.7	51.7	51.7	51.7	51.7	51.7	51.7	51.7	56.0	56.0	56.0	56.0	56.0	60.0	60.0	60.0	60.0	60.0	m
°	5	15	30	45	60	5	15	30	45	60	5	15	30	45	60	5	15	30	45	60	5	15	30	45	60	°
3.0																										3.0
3.5																										3.5
4.0																										4.0
4.5																										4.5
5.0																										5.0
6.0																										6.0
7.0																										7.0
8.0																										8.0
9.0																										9.0
10.0	4.3																									10.0
11.0	4.3	4.3				4.3					4.3															11.0
12.0	4.3	4.3				4.3	4.3				4.3	4.3				4.3										12.0
14.0	4.3	4.3	4.1			4.3	4.3				4.3	4.3				4.3	4.3				3.3	3.3				14.0
16.0	4.3	4.3	4.0	3.3		4.3	4.3	3.9			4.3	4.3	3.9			4.3	4.3	3.8			3.3	3.3				16.0
18.0	4.3	4.3	3.8	3.2	2.4	4.3	4.3	3.8	3.2	2.4	4.3	4.3	3.7	3.2	2.4	4.3	4.3	3.7	3.2		3.3	3.3	3.3			18.0
20.0	4.3	4.3	3.7	3.1	2.3	4.3	4.3	3.7	3.1	2.3	4.3	4.3	3.6	3.1	2.3	4.3	4.3	3.6	3.1	2.3	3.3	3.3	3.3	3.1	2.3	20.0
22.0	4.3	4.3	3.5	3.0	2.3	4.3	4.3	3.5	3.0	2.3	4.3	4.2	3.5	3.0	2.3	4.3	4.2	3.5	3.1	2.3	3.3	3.3	3.3	3.0	2.3	22.0
24.0	4.3	4.1	3.4	2.9		4.3	4.1	3.4	2.9		4.3	4.0	3.4	2.9		4.3	4.0	3.4	3.0	2.3	3.3	3.3	3.3	3.0	2.3	24.0
26.0	4.3	3.9	3.3	2.8		4.3	3.9	3.3	2.9		4.3	3.9	3.2	2.9		4.3	3.9	3.2	2.9		3.3	3.3	3.2	2.9		26.0
28.0	4.3	3.8	3.2	2.8		4.3	3.8	3.2	2.8		4.3	3.7	3.2	2.8		4.3	3.7	3.2	2.9		3.3	3.3	3.1	2.8		28.0
30.0	4.1	3.6	3.1	2.7		3.7	3.7	3.1	2.8		4.1	3.6	3.1	2.8		3.9	3.6	3.1	2.8		3.3	3.3	3.0	2.8		30.0
32.0	3.4	3.5	3.0	2.7		3.0	3.3	3.1	2.7		3.5	3.5	3.0	2.7		3.2	3.5	3.0	2.7		3.1	3.3	3.0	2.7		32.0
34.0	2.8	3.0	3.0	2.6		2.4	2.7	3.0	2.7		2.9	3.2	2.9	2.7		2.6	2.9	2.9	2.7		2.5	2.8	2.9	2.7		34.0
36.0	2.3	2.5	2.8			1.9	2.1	2.5	2.6		2.4	2.7	2.9	2.6		2.0	2.3	2.6	2.7		2.0	2.3	2.6	2.6		36.0
38.0	1.8	2.0	2.3				1.6	1.9			2.0	2.2	2.4			1.6	1.8	2.1	2.3			1.8	2.1	2.3		38.0
40.0	1.4	1.6	1.8					1.5			1.5	1.7	2.0					1.7					1.6	1.8		40.0
44.0																										44.0
48.0																										48.0
52.0																										52.0
56.0																										56.0
60.0																										60.0
64.0																										64.0
68.0																										68.0
72.0																										72.0
1	46	46	46	46	46	92	92	92	92	92	46	46	46	46	46	92	92	92	92	92	100	100	100	100	100	1
2	92	92	92	92	92	92	92	92	92	92	92	92	92	92	92	92	92	92	92	92	100	100	100	100	100	2
3	92	92	92	92	92	92	92	92	92	92	92	92	92	92	92	92	92	92	92	92	100	100	100	100	100	3
4	92	92	92	92	92	92	92	92	92	92	92	92	92	92	92	92	92	92	92	92	100	100	100	100	100	4
5	46	46	46	46	46	46	46	46	46	46	92	92	92	92	92	92	92	92	92	92	100	100	100	100	100	5
ID	31	31	31	31	31	32	32	32	32	32	23	23	23	23	23	24	24	24	24	24	16	16	16	16	16	ID
[DEG]	50~83	52~85	54~85	60~85	75~85	58~83	58~85	57~85	58~85	74~85	54~83	56~85	58~85	58~85	74~85	59~83	61~85	61~85	62~85	74~85	64~83	64~85	63~85	64~85	74~85	[DEG]
	1	1	1	1	1	1	1	1	1	1	1	1	1	1	1	1	1	1	1	1	1	1	1	1	1	
	8.7t	8.7t	8.7t	8.7t	8.7t	8.7t	8.7t	8.7t	8.7t	8.7t	8.7t	8.7t	8.7t	8.7t	8.7t	8.7t	8.7t	8.7t	8.7t	8.7t	8.7t	8.7t	8.7t	8.7t	8.7t	

FLJ	1.6m + 17.4m	15.4 t	8.0m x 7.5m	360 °	JPN

m	12.8	12.8	12.8	12.8	12.8	25.8	25.8	25.8	25.8	25.8	30.1	30.1	30.1	30.1	30.1	30.1	30.1	30.1	30.1	30.1	34.4	34.4	34.4	34.4	34.4	m
°	5	15	30	45	60	5	15	30	45	60	5	15	30	45	60	5	15	30	45	60	5	15	30	45	60	°
3.0																										3.0
3.5																										3.5
4.0																										4.0
4.5																										4.5
5.0	3.3																									5.0
6.0	3.3																									6.0
7.0	3.3																									7.0
8.0	3.3	3.3				3.3					3.3					3.3										8.0
9.0	3.3	3.3				3.3	3.3				3.3					3.3					3.3					9.0
10.0	3.3	3.3				3.3	3.3				3.3	3.3				3.3	3.3				3.3					10.0
11.0	3.3	3.3				3.3	3.3				3.3	3.3				3.3	3.3				3.3	3.3				11.0
12.0	3.3	3.2	2.6			3.3	3.3				3.3	3.3				3.3	3.3				3.3	3.3				12.0
14.0	3.3	2.9	2.4			3.3	3.2	2.6			3.3	3.3	2.7			3.3	3.2	2.6			3.3	3.3				14.0
16.0	2.9	2.6	2.2	1.8		3.3	3.0	2.5			3.3	3.1	2.5			3.3	3.0	2.5			3.3	3.1	2.5			16.0
18.0	2.5	2.3	2.0	1.7		3.3	2.8	2.3	1.9		3.3	2.9	2.4	1.9		3.3	2.9	2.4	1.9		3.3	2.9	2.4	1.9		18.0
20.0	2.3	2.1	1.8	1.6		3.1	2.6	2.2	1.8		3.2	2.7	2.2	1.8	1.5	3.2	2.7	2.2	1.8	1.5	3.3	2.8	2.3	1.8	1.5	20.0
22.0	2.0	1.9	1.7			2.9	2.5	2.0	1.7		3.0	2.6	2.1	1.7	1.5	3.0	2.6	2.1	1.7	1.5	3.1	2.6	2.2	1.8	1.5	22.0
24.0	1.8	1.8	1.6			2.7	2.4	1.9	1.6		2.8	2.5	2.0	1.7		2.8	2.4	2.0	1.7		2.9	2.5	2.1	1.7		24.0
26.0	1.7	1.6				2.5	2.2	1.8	1.6		2.7	2.3	1.9	1.6		2.6	2.3	1.9	1.6		2.7	2.4	2.0	1.6		26.0
28.0	1.5					2.3	2.1	1.7	1.5		2.5	2.2	1.8	1.6		2.5	2.2	1.8	1.6		2.6	2.3	1.9	1.6		28.0
30.0						2.1	1.9	1.7			2.4	2.1	1.7	1.5		2.4	2.1	1.7	1.5		2.5	2.2	1.8	1.5		30.0
32.0						2.0	1.8	1.6			2.2	2.0	1.7			2.2	2.0	1.7			2.4	2.1	1.7	1.5		32.0
34.0						1.8	1.7				2.0	1.9	1.6			2.0	1.9	1.6			2.3	2.0	1.7			34.0
36.0						1.7	1.7				1.9	1.8	1.6			1.9	1.8	1.6			2.1	1.9	1.6			36.0
38.0						1.6	1.6				1.8	1.7				1.8	1.7				1.9	1.8	1.6			38.0
40.0						1.5					1.3	1.5				1.7	1.6				1.4	1.7				40.0
44.0																1.2										44.0
48.0																										48.0
52.0																										52.0
56.0																										56.0
60.0																										60.0
64.0																										64.0
68.0																										68.0
72.0																										72.0
1	0	0	0	0		46	46	46	46		92	92	92	92	92	46	46	46	46	46	92	92	92	92	92	1
2	0	0	0	0		46	46	46	46		46	46	46	46	46	46	46	46	46	46	46	46	46	46	46	2
3	0	0	0	0		46	46	46	46		46	46	46	46	46	46	46	46	46	46	46	46	46	46	46	3
4	0	0	0	0		0	0	0	0		0	0	0	0	0	46	46	46	46	46	46	46	46	46	46	4
5	0	0	0	0		0	0	0	0		0	0	0	0	0	0	0	0	0	0	0	0	0	0	0	5
ID	1	1	1	1		66	66	66	66		67	67	67	67	67	54	54	54	54	54	55	55	55	55	55	ID
[DEG]	0~83	0~85	0~85	0~85		20~83	30~85	44~85	60~85		33~83	35~85	43~85	57~85	73~85	21~83	35~85	43~85	57~85	73~85	40~83	43~85	46~85	58~85	75~85	[DEG]
	1	1	1	1		1	1	1	1		1	1	1	1	1	1	1	1	1	1	1	1	1	1	1	
	8.7t	8.7t	8.7t	8.7t		8.7t	8.7t	8.7t	8.7t		8.7t	8.7t	8.7t	8.7t	8.7t	8.7t	8.7t	8.7t	8.7t	8.7t	8.7t	8.7t	8.7t	8.7t	8.7t	

m	34.4	34.4	34.4	34.4	34.4	38.7	38.7	38.7	38.7	38.7	43.0	43.0	43.0	43.0	43.0	43.0	43.0	43.0	43.0	43.0	47.4	47.4	47.4	47.4	47.4	m
°	5	15	30	45	60	5	15	30	45	60	5	15	30	45	60	5	15	30	45	60	5	15	30	45	60	°
3.0																										3.0
3.5																										3.5
4.0																										4.0
4.5																										4.5
5.0																										5.0
6.0																										6.0
7.0																										7.0
8.0																										8.0
9.0	3.3																									9.0
10.0	3.3					3.3																				10.0
11.0	3.3	3.3				3.3					3.3					2.9										11.0
12.0	3.3	3.3				3.3	3.3				3.3	3.3				2.9					3.2					12.0
14.0	3.3	3.2				3.3	3.3				3.3	3.2				2.9	2.9				3.2	3.2				14.0
16.0	3.3	3.0	2.5			3.3	3.1	2.5			3.3	3.1				2.9	2.9				3.2	3.1				16.0
18.0	3.3	2.9	2.4	1.9		3.3	2.9	2.4			3.3	2.9	2.4			2.9	2.8	2.3			3.2	2.9	2.4			18.0
20.0	3.2	2.7	2.3	1.8	1.5	3.3	2.8	2.3	1.9		3.3	2.8	2.3	1.9		2.9	2.7	2.2	1.9		3.2	2.8	2.3			20.0
22.0	3.0	2.6	2.2	1.8	1.5	3.1	2.6	2.2	1.8	1.5	3.1	2.7	2.2	1.8	1.5	2.9	2.6	2.2	1.8	1.5	3.1	2.7	2.2	1.8		22.0
24.0	2.9	2.5	2.1	1.7		2.9	2.5	2.1	1.7	1.5	3.0	2.5	2.1	1.8	1.5	2.9	2.5	2.1	1.8	1.5	3.0	2.5	2.1	1.8	1.5	24.0
26.0	2.7	2.4	2.0	1.6		2.8	2.4	2.1	1.7		2.8	2.4	2.1	1.7		2.7	2.4	2.0	1.7		2.9	2.4	2.1	1.7	1.4	26.0
28.0	2.6	2.3	1.9	1.6		2.7	2.3	2.0	1.6		2.7	2.3	2.0	1.6		2.6	2.3	2.0	1.6		2.7	2.4	2.0	1.7		28.0
30.0	2.5	2.2	1.8	1.5		2.5	2.2	1.9	1.6		2.6	2.3	1.9	1.6		2.5	2.2	1.9	1.6		2.6	2.3	1.9	1.6		30.0
32.0	2.4	2.1	1.7	1.5		2.4	2.1	1.8	1.5		2.5	2.2	1.9	1.6		2.4	2.1	1.8	1.6		2.5	2.2	1.9	1.6		32.0
34.0	2.3	2.0	1.7			2.3	2.1	1.7	1.5		2.4	2.1	1.8	1.5		2.3	2.0	1.8	1.5		2.4	2.1	1.8	1.6		34.0
36.0	2.1	1.9	1.6			2.2	2.0	1.7			2.3	2.0	1.7	1.5		2.2	2.0	1.7	1.5		2.3	2.0	1.8	1.5		36.0
38.0	2.0	1.8	1.6			2.1	1.9	1.6			1.9	2.0	1.7			2.2	1.9	1.7			1.8	2.0	1.7	1.5		38.0
40.0	1.9	1.7				1.6	1.9	1.6			1.4	1.7	1.6			2.1	1.9	1.6			1.4	1.7	1.7			40.0
44.0	1.4	1.5											1.2			1.8	1.8	1.6								44.0
48.0																1.2	1.4									48.0
52.0																										52.0
56.0																										56.0
60.0																										60.0
64.0																										64.0
68.0																										68.0
72.0																										72.0
1	46	46	46	46	46	92	92	92	92	92	92	92	92	92	92	0	0	0	0	0	92	92	92	92	92	1
2	46	46	46	46	46	46	46	46	46	46	92	92	92	92	92	46	46	46	46	46	92	92	92	92	92	2
3	46	46	46	46	46	46	46	46	46	46	46	46	46	46	46	92	92	92	92	92	92	92	92	92	92	3
4	46	46	46	46	46	46	46	46	46	46	46	46	46	46	46	92	92	92	92	92	46	46	46	46	46	4
5	46	46	46	46	46	46	46	46	46	46	46	46	46	46	46	92	92	92	92	92	46	46	46	46	46	5
ID	49	49	49	49	49	50	50	50	50	50	42	42	42	42	42	21	21	21	21	21	38	38	38	38	38	ID
[DEG]	32~83	35~85	46~85	58~85	75~85	46~83	49~85	44~85	59~85	74~85	51~83	53~85	50~85	57~85	74~85	40~83	42~85	44~85	58~85	74~85	54~83	57~85	59~85	61~85	73~85	[DEG]
	1	1	1	1	1	1	1	1	1	1	1	1	1	1	1	1	1	1	1	1	1	1	1	1	1	
	8.7t	8.7t	8.7t	8.7t	8.7t	8.7t	8.7t	8.7t	8.7t	8.7t	8.7t	8.7t	8.7t	8.7t	8.7t	8.7t	8.7t	8.7t	8.7t	8.7t	8.7t	8.7t	8.7t	8.7t	8.7t	

フルオートラフィングジブ

FLJ	1.6m + 17.4m	15.4 t	8.0m x 7.5m	360 °	JPN

m	47.4	47.4	47.4	47.4	47.4	51.7	51.7	51.7	51.7	51.7	51.7	51.7	51.7	51.7	51.7	56.0	56.0	56.0	56.0	56.0	60.0	60.0	60.0	60.0	60.0	m
°	5	15	30	45	60	5	15	30	45	60	5	15	30	45	60	5	15	30	45	60	5	15	30	45	60	°
3.0																										3.0
3.5																										3.5
4.0																										4.0
4.5																										4.5
5.0																										5.0
6.0																										6.0
7.0																										7.0
8.0																										8.0
9.0																										9.0
10.0																										10.0
11.0																										11.0
12.0	3.1																									12.0
14.0	3.1	3.1				3.2	3.1				3.2	3.0				2.9										14.0
16.0	3.1	3.0				3.2	3.0				3.1	2.9				2.9	2.9				2.8	2.7				16.0
18.0	3.1	2.9	2.4			3.2	2.9				3.1	2.8				2.9	2.8				2.8	2.6				18.0
20.0	3.1	2.7	2.3			3.1	2.7	2.3			3.0	2.7	2.2			2.9	2.7	2.2			2.8	2.6				20.0
22.0	3.1	2.6	2.2	1.8		3.1	2.6	2.2	1.8		2.9	2.6	2.2	1.8		2.9	2.6	2.2			2.7	2.5	2.1			22.0
24.0	2.9	2.5	2.1	1.8	1.5	2.9	2.5	2.1	1.8	1.5	2.9	2.5	2.1	1.8	1.5	2.8	2.5	2.1	1.8		2.7	2.5	2.1	1.8		24.0
26.0	2.8	2.4	2.0	1.7	1.4	2.8	2.4	2.1	1.7	1.4	2.8	2.4	2.0	1.7	1.4	2.8	2.4	2.0	1.8	1.4	2.6	2.4	2.0	1.8	1.4	26.0
28.0	2.7	2.3	2.0	1.7		2.7	2.3	2.0	1.7	1.4	2.7	2.3	2.0	1.7	1.4	2.7	2.3	2.0	1.7	1.4	2.6	2.3	2.0	1.7	1.4	28.0
30.0	2.6	2.2	1.9	1.6		2.6	2.3	1.9	1.6		2.6	2.2	1.9	1.6		2.6	2.2	1.9	1.7		2.5	2.2	1.9	1.7	1.4	30.0
32.0	2.5	2.2	1.9	1.6		2.5	2.2	1.9	1.6		2.5	2.2	1.9	1.6		2.5	2.2	1.9	1.6		2.5	2.2	1.8	1.6		32.0
34.0	2.4	2.1	1.8	1.6		2.4	2.1	1.8	1.6		2.4	2.1	1.8	1.6		2.4	2.1	1.8	1.6		2.4	2.1	1.8	1.6		34.0
36.0	2.3	2.0	1.8	1.5		2.3	2.0	1.8	1.5		2.3	2.0	1.7	1.5		2.3	2.0	1.8	1.6		2.3	2.0	1.7	1.6		36.0
38.0	2.2	2.0	1.7	1.5		1.9	2.0	1.7	1.5		2.2	2.0	1.7	1.5		2.0	2.0	1.7	1.5		2.0	2.0	1.7	1.5		38.0
40.0	1.9	1.9	1.7			1.5	1.8	1.7	1.5		2.0	1.9	1.7	1.5		1.6	1.9	1.7	1.5			1.9	1.7	1.5		40.0
44.0		1.4	1.6					1.3			1.3	1.5	1.6					1.5						1.5		44.0
48.0																										48.0
52.0																										52.0
56.0																										56.0
60.0																										60.0
64.0																										64.0
68.0																										68.0
72.0																										72.0
1	46	46	46	46	46	92	92	92	92	92	46	46	46	46	46	92	92	92	92	92	100	100	100	100	100	1
2	92	92	92	92	92	92	92	92	92	92	92	92	92	92	92	92	92	92	92	92	100	100	100	100	100	2
3	92	92	92	92	92	92	92	92	92	92	92	92	92	92	92	92	92	92	92	92	100	100	100	100	100	3
4	92	92	92	92	92	92	92	92	92	92	92	92	92	92	92	92	92	92	92	92	100	100	100	100	100	4
5	46	46	46	46	46	46	46	46	46	46	92	92	92	92	92	92	92	92	92	92	100	100	100	100	100	5
ID	31	31	31	31	31	32	32	32	32	32	23	23	23	23	23	24	24	24	24	24	16	16	16	16	16	ID
[DEG]	55~83	52~85	55~85	61~85	73~85	58~83	60~85	58~85	60~85	73~85	54~83	56~85	58~85	59~85	73~85	61~83	63~85	61~85	63~85	73~85	65~83	65~85	67~85	65~85	73~85	[DEG]
	1	1	1	1	1	1	1	1	1	1	1	1	1	1	1	1	1	1	1	1	1	1	1	1	1	
	8.7t	8.7t	8.7t	8.7t	8.7t	8.7t	8.7t	8.7t	8.7t	8.7t	8.7t	8.7t	8.7t	8.7t	8.7t	8.7t	8.7t	8.7t	8.7t	8.7t	8.7t	8.7t	8.7t	8.7t	8.7t	

FLJ	1.6m + 7.4m	15.4 t	8.0m x 6.2m	360 °	JPN

m	12.8	12.8	12.8	12.8	12.8	25.8	25.8	25.8	25.8	25.8	30.1	30.1	30.1	30.1	30.1	30.1	30.1	30.1	30.1	30.1	34.4	34.4	34.4	34.4	34.4	m
°	5	15	30	45	60	5	15	30	45	60	5	15	30	45	60	5	15	30	45	60	5	15	30	45	60	°
3.0	7.3																									3.0
3.5	7.3	7.3																								3.5
4.0	7.3	7.3				7.3																				4.0
4.5	7.3	7.3				7.3																				4.5
5.0	7.3	7.3				7.3	7.3				7.3					7.3										5.0
6.0	7.3	7.3	7.3			7.3	7.3				7.3	7.3				7.3	7.3				7.3	7.3				6.0
7.0	7.3	7.3	7.3	5.9		7.3	7.3	7.3			7.3	7.3	7.3			7.3	7.3	7.3			7.3	7.3				7.0
8.0	7.3	7.3	7.0	5.7		7.3	7.3	7.3	6.2		7.3	7.3	7.3			7.3	7.3	7.3			7.3	7.3	7.3			8.0
9.0	7.3	7.3	6.6	5.5		7.3	7.3	7.3	6.0	4.5	7.3	7.3	7.3	6.1		7.3	7.3	7.3	6.1		7.3	7.3	7.3	6.2		9.0
10.0	7.3	7.3	6.3	5.4		7.3	7.3	7.3	5.9	4.5	7.3	7.3	7.3	6.0	4.5	7.3	7.3	7.3	6.0	4.5	7.3	7.3	7.3	6.1	4.5	10.0
11.0	7.3	7.0	6.1	5.2		7.3	7.3	7.3	5.8	4.4	7.3	7.3	7.3	5.9	4.5	7.3	7.3	7.3	5.9	4.5	7.3	7.3	7.3	6.0	4.5	11.0
12.0	7.1	6.5	5.8			7.3	7.3	7.0	5.6		7.3	7.3	7.3	5.8	4.4	7.3	7.3	7.3	5.8	4.4	7.3	7.3	7.3	5.9	4.4	12.0
14.0	6.1	5.9	5.4			7.3	7.3	6.6	5.4		7.3	7.3	6.9	5.6		7.3	7.3	6.9	5.6		7.3	7.3	7.2	5.7	4.4	14.0
16.0	5.4	5.3				7.3	7.3	6.2	5.2		7.3	7.3	6.5	5.4		7.3	7.3	6.5	5.4		7.3	7.3	6.8	5.5		16.0
18.0	4.9					7.3	6.9	5.9	5.1		7.3	7.3	6.2	5.2		7.3	7.3	6.2	5.2		7.3	7.3	6.5	5.3		18.0
20.0						6.3	6.4	5.7			5.7	6.0	5.9	5.1		6.5	6.8	5.9	5.1		6.0	6.3	6.2	5.2		20.0
22.0						4.9	5.1	5.4			4.3	4.6	5.0			5.2	5.4	5.7			4.6	4.9	5.3	5.1		22.0
24.0						3.8	4.0	4.2			3.2	3.5	3.8			4.1	4.3	4.5			3.5	3.8	4.1			24.0
26.0						2.9	3.0				2.3	2.5	2.8			3.1	3.3	3.5			2.6	2.9	3.1			26.0
28.0						2.1	2.2				1.6	1.8				2.4	2.5				1.9	2.1	2.3			28.0
30.0						1.5										1.7	1.9						1.6			30.0
32.0																										32.0
34.0																										34.0
36.0																										36.0
38.0																										38.0
40.0																										40.0
44.0																										44.0
48.0																										48.0
52.0																										52.0
56.0																										56.0
60.0																										60.0
64.0																										64.0
68.0																										68.0
72.0																										72.0
1	0	0	0	0		46	46	46	46	46	92	92	92	92	92	46	46	46	46	46	92	92	92	92	92	1
2	0	0	0	0		46	46	46	46	46	46	46	46	46	46	46	46	46	46	46	46	46	46	46	46	2
3	0	0	0	0		46	46	46	46	46	46	46	46	46	46	46	46	46	46	46	46	46	46	46	46	3
4	0	0	0	0		0	0	0	0	0	0	0	0	0	0	46	46	46	46	46	46	46	46	46	46	4
5	0	0	0	0		0	0	0	0	0	0	0	0	0	0	0	0	0	0	0	0	0	0	0	0	5
ID	1	1	1	1		66	66	66	66	66	67	67	67	67	67	54	54	54	54	54	55	55	55	55	55	ID
[DEG]	0~83	0~85	0~85	0~85		22~83	31~85	45~85	61~85	74~85	40~83	42~85	43~85	62~85	77~85	35~83	37~85	43~85	61~85	77~85	47~83	49~85	46~85	59~85	76~85	[DEG]
	1	1	1	1		1	1	1	1	1	1	1	1	1	1	1	1	1	1	1	1	1	1	1	1	
	8.7t	8.7t	8.7t	8.7t		8.7t	8.7t	8.7t	8.7t	8.7t	8.7t	8.7t	8.7t	8.7t	8.7t	8.7t	8.7t	8.7t	8.7t	8.7t	8.7t	8.7t	8.7t	8.7t	8.7t	

FLJ	1.6m + 7.4m	15.4 t	8.0m x 6.2m	360 °	JPN

m	34.4	34.4	34.4	34.4	34.4	38.7	38.7	38.7	38.7	38.7	43.0	43.0	43.0	43.0	43.0	43.0	43.0	43.0	43.0	43.0	47.4	47.4	47.4	47.4	47.4	m
°	5	15	30	45	60	5	15	30	45	60	5	15	30	45	60	5	15	30	45	60	5	15	30	45	60	°
3.0																										3.0
3.5																										3.5
4.0																										4.0
4.5																										4.5
5.0																										5.0
6.0	7.3	7.3																								6.0
7.0	7.3	7.3				7.3	7.3																			7.0
8.0	7.3	7.3	7.3			7.3	7.3				7.3	7.3				7.3	7.3					7.3				8.0
9.0	7.3	7.3	7.3	6.2		7.3	7.3	7.3			7.3	7.3	7.3			7.3	7.3				7.3	7.3				9.0
10.0	7.3	7.3	7.3	6.1	4.5	7.3	7.3	7.3	6.2		7.3	7.3	7.3			7.3	7.3	7.3			7.3	7.3	7.3			10.0
11.0	7.3	7.3	7.3	6.0	4.5	7.3	7.3	7.3	6.1	4.5	7.3	7.3	7.3	6.1	4.5	7.3	7.3	7.3	6.1		7.3	7.3	7.3			11.0
12.0	7.3	7.3	7.3	5.9	4.4	7.3	7.3	7.3	6.0	4.5	7.3	7.3	7.3	6.0	4.5	7.3	7.3	7.3	6.0	4.5	7.3	7.3	7.3	6.1	4.5	12.0
14.0	7.3	7.3	7.2	5.7	4.4	7.3	7.3	7.3	5.8	4.4	7.3	7.3	7.3	5.8	4.4	7.3	7.3	7.3	5.8	4.4	7.3	7.3	7.3	5.9	4.4	14.0
16.0	7.3	7.3	6.8	5.5		7.3	7.3	7.0	5.6		7.3	7.3	7.3	5.7	4.4	7.3	7.3	7.3	5.7	4.4	7.3	7.3	7.3	5.8	4.4	16.0
18.0	7.3	7.3	6.5	5.3		7.3	7.3	6.7	5.4		7.3	7.3	6.9	5.5		7.3	7.3	6.9	5.5		7.3	7.3	7.1	5.6		18.0
20.0	6.9	7.2	6.2	5.2		6.4	6.7	6.4	5.3		6.2	6.6	6.7	5.4		7.3	7.3	6.7	5.4		6.3	6.7	6.9	5.5		20.0
22.0	5.5	5.8	6.0	5.1		5.0	5.3	5.7	5.2		4.9	5.2	5.6	5.3		6.3	6.6	6.4	5.3		4.9	5.3	5.7	5.4		22.0
24.0	4.4	4.6	4.9			3.9	4.2	4.5	4.7		3.8	4.1	4.4	4.6		5.2	5.4	5.7	5.2		3.8	4.1	4.5	4.7		24.0
26.0	3.5	3.7	3.9			3.0	3.2	3.5			2.9	3.1	3.4	3.6		4.3	4.5	4.7	4.9		2.9	3.2	3.5	3.7		26.0
28.0	2.7	2.9	3.1			2.2	2.4	2.7			2.1	2.3	2.6			3.5	3.7	3.9			2.2	2.4	2.7	2.8		28.0
30.0	2.1	2.2	2.4			1.6	1.7	1.9				1.7	1.9			2.8	3.0	3.2				1.7	2.0			30.0
32.0	1.5	1.6														2.3	2.4	2.5								32.0
34.0																1.8	1.9	2.0								34.0
36.0																1.3	1.4	1.5								36.0
38.0																										38.0
40.0																										40.0
44.0																										44.0
48.0																										48.0
52.0																										52.0
56.0																										56.0
60.0																										60.0
64.0																										64.0
68.0																										68.0
72.0																										72.0
1	46	46	46	46	46	92	92	92	92	92	92	92	92	92	92	0	0	0	0	0	92	92	92	92	92	1
2	46	46	46	46	46	46	46	46	46	46	92	92	92	92	92	46	46	46	46	46	92	92	92	92	92	2
3	46	46	46	46	46	46	46	46	46	46	46	46	46	46	46	92	92	92	92	92	92	92	92	92	92	3
4	46	46	46	46	46	46	46	46	46	46	46	46	46	46	46	92	92	92	92	92	46	46	46	46	46	4
5	46	46	46	46	46	46	46	46	46	46	46	46	46	46	46	92	92	92	92	92	46	46	46	46	46	5
ID	49	49	49	49	49	50	50	50	50	50	42	42	42	42	42	21	21	21	21	21	38	38	38	38	38	ID
[DEG]	39~83	40~85	46~85	59~85	75~85	49~83	50~85	52~85	59~85	75~85	57~83	55~85	56~85	60~85	74~85	45~83	46~85	47~85	61~85	74~85	60~83	59~85	60~85	61~85	74~85	[DEG]
	1	1	1	1	1	1	1	1	1	1	1	1	1	1	1	1	1	1	1	1	1	1	1	1	1	
	8.7t	8.7t	8.7t	8.7t	8.7t	8.7t	8.7t	8.7t	8.7t	8.7t	8.7t	8.7t	8.7t	8.7t	8.7t	8.7t	8.7t	8.7t	8.7t	8.7t	8.7t	8.7t	8.7t	8.7t	8.7t	

m	47.4	47.4	47.4	47.4	47.4	51.7	51.7	51.7	51.7	51.7	51.7	51.7	51.7	51.7	51.7	56.0	56.0	56.0	56.0	56.0	60.0	60.0	60.0	60.0	60.0	m
°	5	15	30	45	60	5	15	30	45	60	5	15	30	45	60	5	15	30	45	60	5	15	30	45	60	°
3.0																										3.0
3.5																										3.5
4.0																										4.0
4.5																										4.5
5.0																										5.0
6.0																										6.0
7.0																										7.0
8.0		7.3																								8.0
9.0	7.3	7.3					7.3					6.4														9.0
10.0	7.3	7.3	7.3			7.3	7.3				6.4	6.4					6.3									10.0
11.0	7.3	7.3	7.3			7.3	7.3	7.3			6.4	6.4	6.4			6.3	6.3					5.3				11.0
12.0	7.3	7.3	7.3	6.1	4.5	7.3	7.3	7.3			6.4	6.4	6.4			6.3	6.3	6.3			5.3	5.3				12.0
14.0	7.3	7.3	7.3	5.9	4.4	7.3	7.3	7.3	6.0	4.5	6.4	6.4	6.4	6.0	4.5	6.3	6.3	6.3	6.0	4.5	5.3	5.3	5.3			14.0
16.0	7.3	7.3	7.3	5.8	4.4	7.3	7.3	7.3	5.8	4.4	6.4	6.4	6.4	5.8	4.4	6.3	6.3	6.3	5.9	4.4	5.3	5.3	5.3	5.3	4.4	16.0
18.0	7.3	7.3	7.1	5.6		7.3	7.3	7.3	5.7	4.3	6.4	6.4	6.4	5.7	4.3	6.3	6.3	6.3	5.7	4.4	5.3	5.3	5.3	5.3	4.4	18.0
20.0	6.9	7.2	6.9	5.5		6.5	6.8	7.0	5.5		6.4	6.4	6.4	5.5		6.3	6.3	6.3	5.6		5.3	5.3	5.3	5.3	4.3	20.0
22.0	5.5	5.8	6.2	5.4		5.1	5.4	5.8	5.4		5.7	6.0	6.4	5.4		5.3	5.6	6.1	5.5		5.3	5.3	5.3	5.3		22.0
24.0	4.4	4.7	5.0	5.2		4.0	4.3	4.6	4.9		4.6	4.9	5.2	5.3		4.2	4.5	4.9	5.1		4.2	4.5	4.8	5.1		24.0
26.0	3.5	3.7	4.0	4.2		3.1	3.3	3.7	3.9		3.7	3.9	4.2	4.4		3.3	3.6	3.9	4.1		3.3	3.5	3.9	4.1		26.0
28.0	2.7	2.9	3.2	3.3		2.3	2.5	2.8	3.0		2.9	3.1	3.4	3.6		2.5	2.8	3.1	3.3		2.5	2.7	3.0	3.2		28.0
30.0	2.1	2.2	2.5				1.9	2.1	2.3		2.3	2.5	2.7	2.8			2.1	2.3	2.5				2.3	2.5		30.0
32.0		1.7	1.9								1.7	1.9	2.1						1.9							32.0
34.0													1.5													34.0
36.0																										36.0
38.0																										38.0
40.0																										40.0
44.0																										44.0
48.0																										48.0
52.0																										52.0
56.0																										56.0
60.0																										60.0
64.0																										64.0
68.0																										68.0
72.0																										72.0
1	46	46	46	46	46	92	92	92	92	92	46	46	46	46	46	92	92	92	92	92	100	100	100	100	100	1
2	92	92	92	92	92	92	92	92	92	92	92	92	92	92	92	92	92	92	92	92	100	100	100	100	100	2
3	92	92	92	92	92	92	92	92	92	92	92	92	92	92	92	92	92	92	92	92	100	100	100	100	100	3
4	92	92	92	92	92	92	92	92	92	92	92	92	92	92	92	92	92	92	92	92	100	100	100	100	100	4
5	46	46	46	46	46	46	46	46	46	46	92	92	92	92	92	92	92	92	92	92	100	100	100	100	100	5
ID	31	31	31	31	31	32	32	32	32	32	23	23	23	23	23	24	24	24	24	24	16	16	16	16	16	ID
[DEG]	58~83	56~85	58~85	58~85	74~85	63~83	62~85	63~85	64~85	74~85	59~83	60~85	58~85	59~85	74~85	66~83	65~85	66~85	65~85	74~85	68~83	69~85	68~85	69~85	74~85	[DEG]
	1	1	1	1	1	1	1	1	1	1	1	1	1	1	1	1	1	1	1	1	1	1	1	1	1	
	8.7t	8.7t	8.7t	8.7t	8.7t	8.7t	8.7t	8.7t	8.7t	8.7t	8.7t	8.7t	8.7t	8.7t	8.7t	8.7t	8.7t	8.7t	8.7t	8.7t	8.7t	8.7t	8.7t	8.7t	8.7t	

フルオートラフィングジブ

FLJ	1.6m + 12.4m	15.4 t	8.0m x 6.2m	360 °	JPN

m	12.8	12.8	12.8	12.8	12.8	25.8	25.8	25.8	25.8	25.8	30.1	30.1	30.1	30.1	30.1	30.1	30.1	30.1	30.1	30.1	34.4	34.4	34.4	34.4	34.4	m
°	5	15	30	45	60	5	15	30	45	60	5	15	30	45	60	5	15	30	45	60	5	15	30	45	60	°
3.0																										3.0
3.5	4.3																									3.5
4.0	4.3																									4.0
4.5	4.3																									4.5
5.0	4.3																									5.0
6.0	4.3	4.3				4.3																				6.0
7.0	4.3	4.3				4.3	4.3				4.3					4.3										7.0
8.0	4.3	4.3				4.3	4.3				4.3	4.3				4.3	4.3				4.3	4.3				8.0
9.0	4.3	4.3	4.3			4.3	4.3				4.3	4.3				4.3	4.3				4.3	4.3				9.0
10.0	4.3	4.3	4.1			4.3	4.3	4.3			4.3	4.3				4.3	4.3				4.3	4.3				10.0
11.0	4.3	4.3	3.9	3.2		4.3	4.3	4.3			4.3	4.3	4.3			4.3	4.3	4.3			4.3	4.3	4.3			11.0
12.0	4.3	4.3	3.7	3.1		4.3	4.3	4.3	3.3		4.3	4.3	4.3			4.3	4.3	4.3			4.3	4.3	4.3			12.0
14.0	4.1	3.8	3.4	2.9		4.3	4.3	4.0	3.2	2.4	4.3	4.3	4.2	3.2	2.4	4.3	4.3	4.2	3.2	2.4	4.3	4.3	4.3	3.3		14.0
16.0	3.6	3.4	3.1	2.7		4.3	4.3	3.7	3.0	2.4	4.3	4.3	3.9	3.1	2.4	4.3	4.3	3.9	3.1	2.4	4.3	4.3	4.0	3.1	2.4	16.0
18.0	3.2	3.1	2.9			4.3	4.2	3.5	2.9		4.3	4.3	3.7	3.0		4.3	4.3	3.7	3.0		4.3	4.3	3.8	3.0	2.3	18.0
20.0	2.9	2.9				4.3	3.9	3.3	2.8		4.3	4.2	3.5	2.9		4.3	4.2	3.5	2.9		4.3	4.3	3.6	2.9		20.0
22.0	2.6	2.7				4.0	3.6	3.1	2.7		4.3	3.9	3.3	2.8		4.3	3.9	3.3	2.8		4.3	4.2	3.4	2.8		22.0
24.0						3.7	3.4	3.0			4.1	3.7	3.1	2.7		4.1	3.7	3.1	2.7		4.3	3.9	3.3	2.8		24.0
26.0						3.4	3.2	2.9			3.3	3.4	3.0			3.8	3.4	3.0			3.5	3.7	3.1	2.7		26.0
28.0						3.1	3.0	2.8			2.5	2.9	2.9			3.2	3.3	2.9			2.7	3.0	3.0			28.0
30.0						2.4	2.6				1.9	2.1	2.5			2.6	2.8	2.8			2.0	2.3	2.7			30.0
32.0						1.9	2.0				1.3	1.5	1.8			2.0	2.2	2.4			1.5	1.7	2.0			32.0
34.0						1.4										1.5	1.7						1.5			34.0
36.0																										36.0
38.0																										38.0
40.0																										40.0
44.0																										44.0
48.0																										48.0
52.0																										52.0
56.0																										56.0
60.0																										60.0
64.0																										64.0
68.0																										68.0
72.0																										72.0
1	0	0	0	0		46	46	46	46	46	92	92	92	92	92	46	46	46	46	46	92	92	92	92	92	1
2	0	0	0	0		46	46	46	46	46	46	46	46	46	46	46	46	46	46	46	46	46	46	46	46	2
3	0	0	0	0		46	46	46	46	46	46	46	46	46	46	46	46	46	46	46	46	46	46	46	46	3
4	0	0	0	0		0	0	0	0	0	0	0	0	0	0	46	46	46	46	46	46	46	46	46	46	4
5	0	0	0	0		0	0	0	0	0	0	0	0	0	0	0	0	0	0	0	0	0	0	0	0	5
ID	1	1	1	1		66	66	66	66	66	67	67	67	67	67	54	54	54	54	54	55	55	55	55	55	ID
[DEG]	0~83	0~85	0~85	0~85		25~83	27~85	47~85	58~85	76~85	41~83	43~85	45~85	59~85	75~85	36~83	38~85	45~85	59~85	75~85	47~83	49~85	48~85	60~85	74~85	[DEG]
	1	1	1	1		1	1	1	1	1	1	1	1	1	1	1	1	1	1	1	1	1	1	1	1	
	8.7t	8.7t	8.7t	8.7t		8.7t	8.7t	8.7t	8.7t	8.7t	8.7t	8.7t	8.7t	8.7t	8.7t	8.7t	8.7t	8.7t	8.7t	8.7t	8.7t	8.7t	8.7t	8.7t	8.7t	

m	34.4	34.4	34.4	34.4	34.4	38.7	38.7	38.7	38.7	38.7	43.0	43.0	43.0	43.0	43.0	43.0	43.0	43.0	43.0	43.0	47.4	47.4	47.4	47.4	47.4	m
°	5	15	30	45	60	5	15	30	45	60	5	15	30	45	60	5	15	30	45	60	5	15	30	45	60	°
3.0																										3.0
3.5																										3.5
4.0																										4.0
4.5																										4.5
5.0																										5.0
6.0																										6.0
7.0	4.3																									7.0
8.0	4.3	4.3				4.3																				8.0
9.0	4.3	4.3				4.3	4.3				4.3					4.3										9.0
10.0	4.3	4.3				4.3	4.3				4.3	4.3				4.3	4.3				4.3					10.0
11.0	4.3	4.3	4.3			4.3	4.3				4.3	4.3				4.3	4.3				4.3	4.3				11.0
12.0	4.3	4.3	4.3			4.3	4.3	4.3			4.3	4.3				4.3	4.3				4.3	4.3				12.0
14.0	4.3	4.3	4.2	3.3		4.3	4.3	4.2	3.3		4.3	4.3	4.2			4.3	4.3	4.1			4.3	4.3	4.2			14.0
16.0	4.3	4.3	4.0	3.1	2.4	4.3	4.3	4.0	3.2	2.4	4.3	4.3	4.0	3.2	2.4	4.3	4.3	3.9	3.2		4.3	4.3	4.0	3.3		16.0
18.0	4.3	4.3	3.8	3.0	2.3	4.3	4.3	3.9	3.1	2.3	4.3	4.3	3.9	3.1	2.4	4.3	4.3	3.7	3.1	2.4	4.3	4.3	3.8	3.2	2.4	18.0
20.0	4.3	4.3	3.6	2.9		4.3	4.3	3.7	3.0	2.3	4.3	4.3	3.7	3.0	2.3	4.3	4.3	3.6	3.0	2.3	4.3	4.3	3.7	3.1	2.3	20.0
22.0	4.3	4.2	3.4	2.8		4.3	4.3	3.6	2.9		4.3	4.3	3.6	2.9		4.3	4.2	3.5	2.9		4.3	4.3	3.6	3.0	2.3	22.0
24.0	4.3	3.9	3.3	2.8		4.3	4.1	3.4	2.8		4.3	4.2	3.5	2.9		4.3	4.0	3.4	2.9		4.3	4.2	3.4	2.9		24.0
26.0	4.1	3.7	3.1	2.7		3.7	3.9	3.3	2.7		3.6	4.0	3.4	2.8		4.3	3.8	3.3	2.8		3.6	4.0	3.4	2.8		26.0
28.0	3.5	3.5	3.0			3.0	3.3	3.1	2.7		2.8	3.2	3.3	2.7		4.1	3.7	3.2	2.7		2.8	3.2	3.3	2.8		28.0
30.0	2.8	3.1	2.9			2.3	2.6	3.0			2.1	2.5	2.9	2.7		3.4	3.5	3.1	2.7		2.2	2.5	2.9	2.7		30.0
32.0	2.2	2.4	2.7			1.7	2.0	2.3			1.6	1.9	2.2			2.8	3.0	3.0				1.9	2.3	2.5		32.0
34.0	1.7	1.9	2.1				1.5	1.8					1.7			2.3	2.5	2.8					1.7	1.9		34.0
36.0	1.3	1.4														1.8	2.0	2.3								36.0
38.0																1.5	1.6	1.8								38.0
40.0																	1.2	1.4								40.0
44.0																										44.0
48.0																										48.0
52.0																										52.0
56.0																										56.0
60.0																										60.0
64.0																										64.0
68.0																										68.0
72.0																										72.0
1	46	46	46	46	46	92	92	92	92	92	92	92	92	92	92	0	0	0	0	0	92	92	92	92	92	1
2	46	46	46	46	46	46	46	46	46	46	92	92	92	92	92	46	46	46	46	46	92	92	92	92	92	2
3	46	46	46	46	46	46	46	46	46	46	46	46	46	46	46	92	92	92	92	92	92	92	92	92	92	3
4	46	46	46	46	46	46	46	46	46	46	46	46	46	46	46	92	92	92	92	92	46	46	46	46	46	4
5	46	46	46	46	46	46	46	46	46	46	46	46	46	46	46	92	92	92	92	92	46	46	46	46	46	5
ID	49	49	49	49	49	50	50	50	50	50	42	42	42	42	42	21	21	21	21	21	38	38	38	38	38	ID
[DEG]	39~83	41~85	44~85	60~85	74~85	52~83	51~85	53~85	58~85	76~85	56~83	58~85	57~85	59~85	75~85	48~83	47~85	49~85	59~85	75~85	62~83	61~85	61~85	62~85	75~85	[DEG]
	1	1	1	1	1	1	1	1	1	1	1	1	1	1	1	1	1	1	1	1	1	1	1	1	1	
	8.7t	8.7t	8.7t	8.7t	8.7t	8.7t	8.7t	8.7t	8.7t	8.7t	8.7t	8.7t	8.7t	8.7t	8.7t	8.7t	8.7t	8.7t	8.7t	8.7t	8.7t	8.7t	8.7t	8.7t	8.7t	

FLJ	1.6m + 12.4m	15.4 t	8.0m x 6.2m	360 °	JPN

m	47.4	47.4	47.4	47.4	47.4	51.7	51.7	51.7	51.7	51.7	51.7	51.7	51.7	51.7	51.7	56.0	56.0	56.0	56.0	56.0	60.0	60.0	60.0	60.0	60.0	m
°	5	15	30	45	60	5	15	30	45	60	5	15	30	45	60	5	15	30	45	60	5	15	30	45	60	°
3.0																										3.0
3.5																										3.5
4.0																										4.0
4.5																										4.5
5.0																										5.0
6.0																										6.0
7.0																										7.0
8.0																										8.0
9.0																										9.0
10.0	4.3																									10.0
11.0	4.3	4.3				4.3					4.3															11.0
12.0	4.3	4.3				4.3	4.3				4.3	4.3				4.3										12.0
14.0	4.3	4.3	4.1			4.3	4.3				4.3	4.3				4.3	4.3				3.3	3.3				14.0
16.0	4.3	4.3	4.0	3.3		4.3	4.3	3.9			4.3	4.3	3.9			4.3	4.3	3.8			3.3	3.3				16.0
18.0	4.3	4.3	3.8	3.2	2.4	4.3	4.3	3.8	3.2	2.4	4.3	4.3	3.7	3.2	2.4	4.3	4.3	3.7	3.2		3.3	3.3	3.3			18.0
20.0	4.3	4.3	3.7	3.1	2.3	4.3	4.3	3.7	3.1	2.3	4.3	4.3	3.6	3.1	2.3	4.3	4.3	3.6	3.1	2.3	3.3	3.3	3.3	3.1	2.3	20.0
22.0	4.3	4.3	3.5	3.0	2.3	4.3	4.3	3.5	3.0	2.3	4.3	4.2	3.5	3.0	2.3	4.3	4.2	3.5	3.1	2.3	3.3	3.3	3.3	3.0	2.3	22.0
24.0	4.3	4.1	3.4	2.9		4.3	4.1	3.4	2.9		4.3	4.0	3.4	2.9		4.3	4.0	3.4	3.0	2.3	3.3	3.3	3.3	3.0	2.3	24.0
26.0	4.1	3.9	3.3	2.8		3.7	3.9	3.3	2.9		4.3	3.9	3.2	2.9		3.9	3.9	3.2	2.9		3.3	3.3	3.2	2.9		26.0
28.0	3.3	3.7	3.2	2.8		2.9	3.3	3.2	2.8		3.5	3.7	3.2	2.8		3.1	3.5	3.2	2.9		3.0	3.3	3.1	2.8		28.0
30.0	2.6	3.0	3.1	2.7		2.3	2.6	3.0	2.8		2.8	3.1	3.1	2.8		2.4	2.8	3.1	2.8		2.4	2.7	3.0	2.8		30.0
32.0	2.1	2.4	2.7	2.7			2.0	2.4	2.7		2.2	2.5	2.9	2.7			2.2	2.6	2.7				2.5	2.7		32.0
34.0	1.6	1.8	2.1	2.4				1.8	2.1		1.7	2.0	2.3	2.5				2.0	2.3					2.2		34.0
36.0			1.6									1.5	1.8	2.0												36.0
38.0																										38.0
40.0																										40.0
44.0																										44.0
48.0																										48.0
52.0																										52.0
56.0																										56.0
60.0																										60.0
64.0																										64.0
68.0																										68.0
72.0																										72.0
1	46	46	46	46	46	92	92	92	92	92	46	46	46	46	46	92	92	92	92	92	100	100	100	100	100	1
2	92	92	92	92	92	92	92	92	92	92	92	92	92	92	92	92	92	92	92	92	100	100	100	100	100	2
3	92	92	92	92	92	92	92	92	92	92	92	92	92	92	92	92	92	92	92	92	100	100	100	100	100	3
4	92	92	92	92	92	92	92	92	92	92	92	92	92	92	92	92	92	92	92	92	100	100	100	100	100	4
5	46	46	46	46	46	46	46	46	46	46	92	92	92	92	92	92	92	92	92	92	100	100	100	100	100	5
ID	31	31	31	31	31	32	32	32	32	32	23	23	23	23	23	24	24	24	24	24	16	16	16	16	16	ID
[DEG]	57~83	59~85	58~85	60~85	75~85	64~83	64~85	64~85	65~85	74~85	60~83	60~85	62~85	60~85	74~85	67~83	66~85	67~85	68~85	74~85	69~83	70~85	71~85	70~85	74~85	[DEG]
	1	1	1	1	1	1	1	1	1	1	1	1	1	1	1	1	1	1	1	1	1	1	1	1	1	
	8.7t	8.7t	8.7t	8.7t	8.7t	8.7t	8.7t	8.7t	8.7t	8.7t	8.7t	8.7t	8.7t	8.7t	8.7t	8.7t	8.7t	8.7t	8.7t	8.7t	8.7t	8.7t	8.7t	8.7t	8.7t	

FLJ	1.6m + 17.4m	15.4 t	8.0m x 6.2m	360 °	JPN

m	12.8	12.8	12.8	12.8	12.8	25.8	25.8	25.8	25.8	25.8	30.1	30.1	30.1	30.1	30.1	30.1	30.1	30.1	30.1	30.1	34.4	34.4	34.4	34.4	34.4	m
°	5	15	30	45	60	5	15	30	45	60	5	15	30	45	60	5	15	30	45	60	5	15	30	45	60	°
3.0																										3.0
3.5																										3.5
4.0																										4.0
4.5																										4.5
5.0	3.3																									5.0
6.0	3.3																									6.0
7.0	3.3																									7.0
8.0	3.3	3.3				3.3					3.3					3.3										8.0
9.0	3.3	3.3				3.3	3.3				3.3					3.3					3.3					9.0
10.0	3.3	3.3				3.3	3.3				3.3	3.3				3.3	3.3				3.3					10.0
11.0	3.3	3.3				3.3	3.3				3.3	3.3				3.3	3.3				3.3	3.3				11.0
12.0	3.3	3.2	2.6			3.3	3.3				3.3	3.3				3.3	3.3				3.3	3.3				12.0
14.0	3.3	2.9	2.4			3.3	3.2	2.6			3.3	3.3	2.7			3.3	3.2	2.6			3.3	3.3				14.0
16.0	2.9	2.6	2.2	1.8		3.3	3.0	2.5			3.3	3.1	2.5			3.3	3.0	2.5			3.3	3.1	2.5			16.0
18.0	2.5	2.3	2.0	1.7		3.3	2.8	2.3	1.9		3.3	2.9	2.4	1.9		3.3	2.9	2.4	1.9		3.3	2.9	2.4	1.9		18.0
20.0	2.3	2.1	1.8	1.6		3.1	2.6	2.2	1.8		3.2	2.7	2.2	1.8	1.5	3.2	2.7	2.2	1.8	1.5	3.3	2.8	2.3	1.8	1.5	20.0
22.0	2.0	1.9	1.7			2.9	2.5	2.0	1.7		3.0	2.6	2.1	1.7	1.5	3.0	2.6	2.1	1.7	1.5	3.1	2.6	2.2	1.8	1.5	22.0
24.0	1.8	1.8	1.6			2.7	2.4	1.9	1.6		2.8	2.5	2.0	1.7		2.8	2.4	2.0	1.7		2.9	2.5	2.1	1.7		24.0
26.0	1.7	1.6				2.5	2.2	1.8	1.6		2.7	2.3	1.9	1.6		2.6	2.3	1.9	1.6		2.7	2.4	2.0	1.6		26.0
28.0	1.5					2.3	2.1	1.7	1.5		2.5	2.2	1.8	1.6		2.5	2.2	1.8	1.6		2.6	2.3	1.9	1.6		28.0
30.0						2.1	1.9	1.7			2.4	2.1	1.7	1.5		2.4	2.1	1.7	1.5		2.5	2.2	1.8	1.5		30.0
32.0						2.0	1.8	1.6			2.1	2.0	1.7			2.2	2.0	1.7			2.2	2.1	1.7	1.5		32.0
34.0						1.8	1.7				1.5	1.9	1.6			2.0	1.9	1.6			1.6	2.0	1.7			34.0
36.0						1.6	1.7					1.4	1.6			1.7	1.8	1.6				1.5	1.6			36.0
38.0						1.2	1.4									1.3	1.5						1.4			38.0
40.0																										40.0
44.0																										44.0
48.0																										48.0
52.0																										52.0
56.0																										56.0
60.0																										60.0
64.0																										64.0
68.0																										68.0
72.0																										72.0
1	0	0	0	0		46	46	46	46		92	92	92	92	92	46	46	46	46	46	92	92	92	92	92	1
2	0	0	0	0		46	46	46	46		46	46	46	46	46	46	46	46	46	46	46	46	46	46	46	2
3	0	0	0	0		46	46	46	46		46	46	46	46	46	46	46	46	46	46	46	46	46	46	46	3
4	0	0	0	0		0	0	0	0		0	0	0	0	0	46	46	46	46	46	46	46	46	46	46	4
5	0	0	0	0		0	0	0	0		0	0	0	0	0	0	0	0	0	0	0	0	0	0	0	5
ID	1	1	1	1		66	66	66	66		67	67	67	67	67	54	54	54	54	54	55	55	55	55	55	ID
[DEG]	0~83	0~85	0~85	0~85		27~83	30~85	44~85	60~85		45~83	44~85	47~85	57~85	73~85	37~83	40~85	43~85	57~85	73~85	50~83	50~85	49~85	58~85	75~85	[DEG]
	1	1	1	1		1	1	1	1		1	1	1	1	1	1	1	1	1	1	1	1	1	1	1	
	8.7t	8.7t	8.7t	8.7t		8.7t	8.7t	8.7t	8.7t		8.7t	8.7t	8.7t	8.7t	8.7t	8.7t	8.7t	8.7t	8.7t	8.7t	8.7t	8.7t	8.7t	8.7t	8.7t	

フルオートラフィングジブ

FLJ	1.6m + 17.4m	15.4 t	8.0m x 6.2m	360 °	JPN

m	34.4	34.4	34.4	34.4	34.4	38.7	38.7	38.7	38.7	38.7	43.0	43.0	43.0	43.0	43.0	43.0	43.0	43.0	43.0	43.0	47.4	47.4	47.4	47.4	47.4	m
°	5	15	30	45	60	5	15	30	45	60	5	15	30	45	60	5	15	30	45	60	5	15	30	45	60	°
3.0																										3.0
3.5																										3.5
4.0																										4.0
4.5																										4.5
5.0																										5.0
6.0																										6.0
7.0																										7.0
8.0																										8.0
9.0	3.3																									9.0
10.0	3.3					3.3																				10.0
11.0	3.3	3.3				3.3					3.3					2.9										11.0
12.0	3.3	3.3				3.3	3.3				3.3	3.3				2.9					3.2					12.0
14.0	3.3	3.2				3.3	3.3				3.3	3.2				2.9	2.9				3.2	3.2				14.0
16.0	3.3	3.0	2.5			3.3	3.1	2.5			3.3	3.1				2.9	2.9				3.2	3.1				16.0
18.0	3.3	2.9	2.4	1.9		3.3	2.9	2.4			3.3	2.9	2.4			2.9	2.8	2.3			3.2	2.9	2.4			18.0
20.0	3.2	2.7	2.3	1.8	1.5	3.3	2.8	2.3	1.9		3.3	2.8	2.3	1.9		2.9	2.7	2.2	1.9		3.2	2.8	2.3			20.0
22.0	3.0	2.6	2.2	1.8	1.5	3.1	2.6	2.2	1.8	1.5	3.1	2.7	2.2	1.8	1.5	2.9	2.6	2.2	1.8	1.5	3.1	2.7	2.2	1.8		22.0
24.0	2.9	2.5	2.1	1.7		2.9	2.5	2.1	1.7	1.5	3.0	2.5	2.1	1.8	1.5	2.9	2.5	2.1	1.8	1.5	3.0	2.5	2.1	1.8	1.5	24.0
26.0	2.7	2.4	2.0	1.6		2.8	2.4	2.1	1.7		2.8	2.4	2.1	1.7		2.7	2.4	2.0	1.7		2.9	2.4	2.1	1.7	1.4	26.0
28.0	2.6	2.3	1.9	1.6		2.7	2.3	2.0	1.6		2.7	2.3	2.0	1.6		2.6	2.3	2.0	1.6		2.7	2.4	2.0	1.7		28.0
30.0	2.5	2.2	1.8	1.5		2.5	2.2	1.9	1.6		2.6	2.3	1.9	1.6		2.5	2.2	1.9	1.6		2.6	2.3	1.9	1.6		30.0
32.0	2.4	2.1	1.7	1.5		2.3	2.1	1.8	1.5		2.2	2.2	1.9	1.6		2.4	2.1	1.8	1.6		2.1	2.2	1.9	1.6		32.0
34.0	2.3	2.0	1.7			1.8	2.1	1.7	1.5		1.7	2.0	1.8	1.5		2.3	2.0	1.8	1.5		1.6	2.0	1.8	1.6		34.0
36.0	1.9	1.9	1.6			1.4	1.7	1.7				1.5	1.7	1.5		2.2	2.0	1.7	1.5			1.5	1.8	1.5		36.0
38.0	1.5	1.7	1.6					1.6					1.5			1.9	1.9	1.7					1.5	1.5		38.0
40.0		1.3														1.5	1.8	1.6								40.0
44.0																		1.3								44.0
48.0																										48.0
52.0																										52.0
56.0																										56.0
60.0																										60.0
64.0																										64.0
68.0																										68.0
72.0																										72.0
1	46	46	46	46	46	92	92	92	92	92	92	92	92	92	92	0	0	0	0	0	92	92	92	92	92	1
2	46	46	46	46	46	46	46	46	46	46	92	92	92	92	92	46	46	46	46	46	92	92	92	92	92	2
3	46	46	46	46	46	46	46	46	46	46	46	46	46	46	46	92	92	92	92	92	92	92	92	92	92	3
4	46	46	46	46	46	46	46	46	46	46	46	46	46	46	46	92	92	92	92	92	46	46	46	46	46	4
5	46	46	46	46	46	46	46	46	46	46	46	46	46	46	46	92	92	92	92	92	46	46	46	46	46	5
ID	49	49	49	49	49	50	50	50	50	50	42	42	42	42	42	21	21	21	21	21	38	38	38	38	38	ID
[DEG]	43~83	43~85	46~85	58~85	75~85	51~83	54~85	54~85	59~85	74~85	58~83	58~85	58~85	60~85	74~85	51~83	54~85	50~85	58~85	74~85	61~83	61~85	61~85	63~85	73~85	[DEG]
	1	1	1	1	1	1	1	1	1	1	1	1	1	1	1	1	1	1	1	1	1	1	1	1	1	
	8.7t	8.7t	8.7t	8.7t	8.7t	8.7t	8.7t	8.7t	8.7t	8.7t	8.7t	8.7t	8.7t	8.7t	8.7t	8.7t	8.7t	8.7t	8.7t	8.7t	8.7t	8.7t	8.7t	8.7t	8.7t	

m	47.4	47.4	47.4	47.4	47.4	51.7	51.7	51.7	51.7	51.7	51.7	51.7	51.7	51.7	51.7	56.0	56.0	56.0	56.0	56.0	60.0	60.0	60.0	60.0	60.0	m
°	5	15	30	45	60	5	15	30	45	60	5	15	30	45	60	5	15	30	45	60	5	15	30	45	60	°
3.0																										3.0
3.5																										3.5
4.0																										4.0
4.5																										4.5
5.0																										5.0
6.0																										6.0
7.0																										7.0
8.0																										8.0
9.0																										9.0
10.0																										10.0
11.0																										11.0
12.0	3.1																									12.0
14.0	3.1	3.1				3.2	3.1				3.2	3.0				2.9										14.0
16.0	3.1	3.0				3.2	3.0				3.1	2.9				2.9	2.9				2.8	2.7				16.0
18.0	3.1	2.9	2.4			3.2	2.9				3.1	2.8				2.9	2.8				2.8	2.6				18.0
20.0	3.1	2.7	2.3			3.1	2.7	2.3			3.0	2.7	2.2			2.9	2.7	2.2			2.8	2.6				20.0
22.0	3.1	2.6	2.2	1.8		3.1	2.6	2.2	1.8		2.9	2.6	2.2	1.8		2.9	2.6	2.2			2.7	2.5	2.1			22.0
24.0	2.9	2.5	2.1	1.8	1.5	2.9	2.5	2.1	1.8	1.5	2.9	2.5	2.1	1.8	1.5	2.8	2.5	2.1	1.8		2.7	2.5	2.1	1.8		24.0
26.0	2.8	2.4	2.0	1.7	1.4	2.8	2.4	2.1	1.7	1.4	2.8	2.4	2.0	1.7	1.4	2.8	2.4	2.0	1.8	1.4	2.6	2.4	2.0	1.8	1.4	26.0
28.0	2.7	2.3	2.0	1.7		2.7	2.3	2.0	1.7	1.4	2.7	2.3	2.0	1.7	1.4	2.7	2.3	2.0	1.7	1.4	2.6	2.3	2.0	1.7	1.4	28.0
30.0	2.6	2.2	1.9	1.6		2.6	2.3	1.9	1.6		2.6	2.2	1.9	1.6		2.6	2.2	1.9	1.7		2.5	2.2	1.9	1.7	1.4	30.0
32.0	2.5	2.2	1.9	1.6		2.2	2.2	1.9	1.6		2.5	2.2	1.9	1.6		2.3	2.2	1.9	1.6		2.3	2.2	1.8	1.6		32.0
34.0	2.1	2.1	1.8	1.6			2.1	1.8	1.6		2.2	2.1	1.8	1.6		1.8	2.1	1.8	1.6			2.1	1.8	1.6		34.0
36.0	1.6	1.9	1.8	1.5				1.8	1.5		1.7	2.0	1.7	1.5				1.8	1.6				1.7	1.6		36.0
38.0		1.5	1.7	1.5				1.6	1.5			1.6	1.7	1.5				1.7	1.5					1.5		38.0
40.0			1.5										1.6	1.5					1.5							40.0
44.0																										44.0
48.0																										48.0
52.0																										52.0
56.0																										56.0
60.0																										60.0
64.0																										64.0
68.0																										68.0
72.0																										72.0
1	46	46	46	46	46	92	92	92	92	92	46	46	46	46	46	92	92	92	92	92	100	100	100	100	100	1
2	92	92	92	92	92	92	92	92	92	92	92	92	92	92	92	92	92	92	92	92	100	100	100	100	100	2
3	92	92	92	92	92	92	92	92	92	92	92	92	92	92	92	92	92	92	92	92	100	100	100	100	100	3
4	92	92	92	92	92	92	92	92	92	92	92	92	92	92	92	92	92	92	92	92	100	100	100	100	100	4
5	46	46	46	46	46	46	46	46	46	46	92	92	92	92	92	92	92	92	92	92	100	100	100	100	100	5
ID	31	31	31	31	31	32	32	32	32	32	23	23	23	23	23	24	24	24	24	24	16	16	16	16	16	ID
[DEG]	59~83	59~85	59~85	61~85	73~85	65~83	66~85	64~85	66~85	73~85	62~83	62~85	62~85	64~85	73~85	66~83	68~85	67~85	67~85	73~85	69~83	70~85	71~85	70~85	73~85	[DEG]
	1	1	1	1	1	1	1	1	1	1	1	1	1	1	1	1	1	1	1	1	1	1	1	1	1	
	8.7t	8.7t	8.7t	8.7t	8.7t	8.7t	8.7t	8.7t	8.7t	8.7t	8.7t	8.7t	8.7t	8.7t	8.7t	8.7t	8.7t	8.7t	8.7t	8.7t	8.7t	8.7t	8.7t	8.7t	8.7t	

FLJ	1.6m + 7.4m	15.4 t	8.0m x 5.0m	360 °	JPN

m	12.8	12.8	12.8	12.8	12.8	25.8	25.8	25.8	25.8	25.8	30.1	30.1	30.1	30.1	30.1	30.1	30.1	30.1	30.1	30.1	34.4	34.4	34.4	34.4	34.4	m
°	5	15	30	45	60	5	15	30	45	60	5	15	30	45	60	5	15	30	45	60	5	15	30	45	60	°
3.0	7.3																									3.0
3.5	7.3	7.3																								3.5
4.0	7.3	7.3				7.3																				4.0
4.5	7.3	7.3				7.3																				4.5
5.0	7.3	7.3				7.3	7.3				7.3					7.3										5.0
6.0	7.3	7.3	7.3			7.3	7.3				7.3	7.3				7.3	7.3				7.3	7.3				6.0
7.0	7.3	7.3	7.3	5.9		7.3	7.3	7.3			7.3	7.3	7.3			7.3	7.3	7.3			7.3	7.3				7.0
8.0	7.3	7.3	7.0	5.7		7.3	7.3	7.3	6.2		7.3	7.3	7.3			7.3	7.3	7.3			7.3	7.3	7.3			8.0
9.0	7.3	7.3	6.6	5.5		7.3	7.3	7.3	6.0	4.5	7.3	7.3	7.3	6.1		7.3	7.3	7.3	6.1		7.3	7.3	7.3	6.2		9.0
10.0	7.3	7.3	6.3	5.4		7.3	7.3	7.3	5.9	4.5	7.3	7.3	7.3	6.0	4.5	7.3	7.3	7.3	6.0	4.5	7.3	7.3	7.3	6.1	4.5	10.0
11.0	7.3	7.0	6.1	5.2		7.3	7.3	7.3	5.8	4.4	7.3	7.3	7.3	5.9	4.5	7.3	7.3	7.3	5.9	4.5	7.3	7.3	7.3	6.0	4.5	11.0
12.0	7.1	6.5	5.8			7.3	7.3	7.0	5.6		7.3	7.3	7.3	5.8	4.4	7.3	7.3	7.3	5.8	4.4	7.3	7.3	7.3	5.9	4.4	12.0
14.0	6.1	5.9	5.4			7.3	7.3	6.6	5.4		7.3	7.3	6.9	5.6		7.3	7.3	6.9	5.6		7.3	7.3	7.2	5.7	4.4	14.0
16.0	5.4	5.3				7.3	7.3	6.2	5.2		6.7	7.2	6.5	5.4		7.3	7.3	6.5	5.4		7.1	7.3	6.8	5.5		16.0
18.0	4.9					5.5	5.9	5.9	5.1		5.0	5.4	5.9	5.2		5.8	6.2	6.2	5.2		5.3	5.7	6.2	5.3		18.0
20.0						4.2	4.4	4.8			3.6	3.9	4.4	4.6		4.4	4.7	5.1	5.1		3.9	4.2	4.7	5.0		20.0
22.0						3.1	3.3	3.6			2.5	2.8	3.1			3.3	3.6	3.9			2.8	3.1	3.4	3.7		22.0
24.0						2.2	2.3	2.6			1.6	1.9	2.1			2.4	2.6	2.9			1.9	2.1	2.5			24.0
26.0						1.4	1.6									1.7	1.8	2.0					1.6			26.0
28.0																										28.0
30.0																										30.0
32.0																										32.0
34.0																										34.0
36.0																										36.0
38.0																										38.0
40.0																										40.0
44.0																										44.0
48.0																										48.0
52.0																										52.0
56.0																										56.0
60.0																										60.0
64.0																										64.0
68.0																										68.0
72.0																										72.0
1	0	0	0	0		46	46	46	46	46	92	92	92	92	92	46	46	46	46	46	92	92	92	92	92	1
2	0	0	0	0		46	46	46	46	46	46	46	46	46	46	46	46	46	46	46	46	46	46	46	46	2
3	0	0	0	0		46	46	46	46	46	46	46	46	46	46	46	46	46	46	46	46	46	46	46	46	3
4	0	0	0	0		0	0	0	0	0	0	0	0	0	0	46	46	46	46	46	46	46	46	46	46	4
5	0	0	0	0		0	0	0	0	0	0	0	0	0	0	0	0	0	0	0	0	0	0	0	0	5
ID	1	1	1	1		66	66	66	66	66	67	67	67	67	67	54	54	54	54	54	55	55	55	55	55	ID
[DEG]	0~83	0~85	0~85	0~85		36~83	38~85	45~85	61~85	74~85	49~83	50~85	52~85	61~85	77~85	45~83	46~85	43~85	61~85	77~85	54~83	56~85	54~85	58~85	76~85	[DEG]
	1	1	1	1		1	1	1	1	1	1	1	1	1	1	1	1	1	1	1	1	1	1	1	1	
	8.7t	8.7t	8.7t	8.7t		8.7t	8.7t	8.7t	8.7t	8.7t	8.7t	8.7t	8.7t	8.7t	8.7t	8.7t	8.7t	8.7t	8.7t	8.7t	8.7t	8.7t	8.7t	8.7t	8.7t	

m	34.4	34.4	34.4	34.4	34.4	38.7	38.7	38.7	38.7	38.7	43.0	43.0	43.0	43.0	43.0	43.0	43.0	43.0	43.0	43.0	47.4	47.4	47.4	47.4	47.4	m
°	5	15	30	45	60	5	15	30	45	60	5	15	30	45	60	5	15	30	45	60	5	15	30	45	60	°
3.0																										3.0
3.5																										3.5
4.0																										4.0
4.5																										4.5
5.0																										5.0
6.0	7.3	7.3																								6.0
7.0	7.3	7.3				7.3	7.3																			7.0
8.0	7.3	7.3	7.3			7.3	7.3				7.3	7.3				7.3	7.3					7.3				8.0
9.0	7.3	7.3	7.3	6.2		7.3	7.3	7.3			7.3	7.3	7.3			7.3	7.3				7.3	7.3				9.0
10.0	7.3	7.3	7.3	6.1	4.5	7.3	7.3	7.3	6.2		7.3	7.3	7.3			7.3	7.3	7.3			7.3	7.3	7.3			10.0
11.0	7.3	7.3	7.3	6.0	4.5	7.3	7.3	7.3	6.1	4.5	7.3	7.3	7.3	6.1	4.5	7.3	7.3	7.3	6.1		7.3	7.3	7.3			11.0
12.0	7.3	7.3	7.3	5.9	4.4	7.3	7.3	7.3	6.0	4.5	7.3	7.3	7.3	6.0	4.5	7.3	7.3	7.3	6.0	4.5	7.3	7.3	7.3	6.1	4.5	12.0
14.0	7.3	7.3	7.2	5.7	4.4	7.3	7.3	7.3	5.8	4.4	7.3	7.3	7.3	5.8	4.4	7.3	7.3	7.3	5.8	4.4	7.3	7.3	7.3	5.9	4.4	14.0
16.0	7.3	7.3	6.8	5.5		7.3	7.3	7.0	5.6		7.3	7.3	7.3	5.7	4.4	7.3	7.3	7.3	5.7	4.4	7.3	7.3	7.3	5.8	4.4	16.0
18.0	6.2	6.5	6.5	5.3		5.6	6.0	6.6	5.4		5.5	5.9	6.5	5.5		7.0	7.3	6.9	5.5		5.6	6.0	6.5	5.6		18.0
20.0	4.8	5.1	5.5	5.2		4.3	4.6	5.0	5.3		4.1	4.5	4.9	5.3		5.6	5.8	6.2	5.4		4.2	4.5	5.0	5.4		20.0
22.0	3.7	3.9	4.2	4.5		3.1	3.4	3.8	4.1		3.0	3.3	3.7	4.0		4.4	4.7	5.0	5.2		3.1	3.4	3.8	4.1		22.0
24.0	2.8	3.0	3.2			2.3	2.5	2.8	3.0		2.1	2.4	2.7	3.0		3.5	3.7	4.0	4.2			2.5	2.8	3.1		24.0
26.0	2.0	2.2	2.4				1.7	2.0					1.9	2.1		2.7	2.9	3.2	3.3					2.2		26.0
28.0		1.5	1.7													2.1	2.3	2.5								28.0
30.0																1.6	1.7	1.9								30.0
32.0																		1.4								32.0
34.0																										34.0
36.0																										36.0
38.0																										38.0
40.0																										40.0
44.0																										44.0
48.0																										48.0
52.0																										52.0
56.0																										56.0
60.0																										60.0
64.0																										64.0
68.0																										68.0
72.0																										72.0
1	46	46	46	46	46	92	92	92	92	92	92	92	92	92	92	0	0	0	0	0	92	92	92	92	92	1
2	46	46	46	46	46	46	46	46	46	46	92	92	92	92	92	46	46	46	46	46	92	92	92	92	92	2
3	46	46	46	46	46	46	46	46	46	46	46	46	46	46	46	92	92	92	92	92	92	92	92	92	92	3
4	46	46	46	46	46	46	46	46	46	46	46	46	46	46	46	92	92	92	92	92	46	46	46	46	46	4
5	46	46	46	46	46	46	46	46	46	46	46	46	46	46	46	92	92	92	92	92	46	46	46	46	46	5
ID	49	49	49	49	49	50	50	50	50	50	42	42	42	42	42	21	21	21	21	21	38	38	38	38	38	ID
[DEG]	51~83	48~85	50~85	58~85	75~85	58~83	57~85	58~85	59~85	75~85	62~83	63~85	62~85	63~85	74~85	54~83	55~85	54~85	60~85	74~85	67~83	66~85	67~85	66~85	74~85	[DEG]
	1	1	1	1	1	1	1	1	1	1	1	1	1	1	1	1	1	1	1	1	1	1	1	1	1	
	8.7t	8.7t	8.7t	8.7t	8.7t	8.7t	8.7t	8.7t	8.7t	8.7t	8.7t	8.7t	8.7t	8.7t	8.7t	8.7t	8.7t	8.7t	8.7t	8.7t	8.7t	8.7t	8.7t	8.7t	8.7t	

フルオートラフィングジブ

FLJ	1.6m + 7.4m	15.4 t	8.0m x 5.0m	360 °	JPN

m	47.4	47.4	47.4	47.4	47.4	51.7	51.7	51.7	51.7	51.7	51.7	51.7	51.7	51.7	51.7	56.0	56.0	56.0	56.0	56.0	60.0	60.0	60.0	60.0	60.0	m
°	5	15	30	45	60	5	15	30	45	60	5	15	30	45	60	5	15	30	45	60	5	15	30	45	60	°
3.0																										3.0
3.5																										3.5
4.0																										4.0
4.5																										4.5
5.0																										5.0
6.0																										6.0
7.0																										7.0
8.0		7.3																								8.0
9.0	7.3	7.3					7.3					6.4														9.0
10.0	7.3	7.3	7.3			7.3	7.3				6.4	6.4					6.3									10.0
11.0	7.3	7.3	7.3			7.3	7.3	7.3			6.4	6.4	6.4			6.3	6.3					5.3				11.0
12.0	7.3	7.3	7.3	6.1	4.5	7.3	7.3	7.3			6.4	6.4	6.4			6.3	6.3	6.3			5.3	5.3				12.0
14.0	7.3	7.3	7.3	5.9	4.4	7.3	7.3	7.3	6.0	4.5	6.4	6.4	6.4	6.0	4.5	6.3	6.3	6.3	6.0	4.5	5.3	5.3	5.3			14.0
16.0	7.3	7.3	7.3	5.8	4.4	7.3	7.3	7.3	5.8	4.4	6.4	6.4	6.4	5.8	4.4	6.3	6.3	6.3	5.9	4.4	5.3	5.3	5.3	5.3	4.4	16.0
18.0	6.2	6.5	7.0	5.6		5.7	6.2	6.7	5.7	4.3	6.4	6.4	6.4	5.7	4.3	6.0	6.3	6.3	5.7	4.4	5.3	5.3	5.3	5.3	4.4	18.0
20.0	4.8	5.1	5.5	5.5		4.3	4.7	5.2	5.5		5.0	5.3	5.7	5.5		4.6	4.9	5.4	5.6		4.5	4.9	5.3	5.3	4.3	20.0
22.0	3.6	3.9	4.3	4.6		3.2	3.6	4.0	4.3		3.9	4.1	4.5	4.8		3.5	3.8	4.2	4.5		3.4	3.8	4.2	4.5		22.0
24.0	2.7	3.0	3.3	3.6			2.6	3.0	3.2		3.0	3.2	3.5	3.8			2.8	3.2	3.5				3.2	3.5		24.0
26.0	2.0	2.2	2.5	2.7					2.4		2.2	2.4	2.7	2.9					2.6							26.0
28.0			1.8	2.0									2.0	2.2												28.0
30.0																										30.0
32.0																										32.0
34.0																										34.0
36.0																										36.0
38.0																										38.0
40.0																										40.0
44.0																										44.0
48.0																										48.0
52.0																										52.0
56.0																										56.0
60.0																										60.0
64.0																										64.0
68.0																										68.0
72.0																										72.0
1	46	46	46	46	46	92	92	92	92	92	46	46	46	46	46	92	92	92	92	92	100	100	100	100	100	1
2	92	92	92	92	92	92	92	92	92	92	92	92	92	92	92	92	92	92	92	92	100	100	100	100	100	2
3	92	92	92	92	92	92	92	92	92	92	92	92	92	92	92	92	92	92	92	92	100	100	100	100	100	3
4	92	92	92	92	92	92	92	92	92	92	92	92	92	92	92	92	92	92	92	92	100	100	100	100	100	4
5	46	46	46	46	46	46	46	46	46	46	92	92	92	92	92	92	92	92	92	92	100	100	100	100	100	5
ID	31	31	31	31	31	32	32	32	32	32	23	23	23	23	23	24	24	24	24	24	16	16	16	16	16	ID
[DEG]	62~83	63~85	62~85	63~85	74~85	69~83	68~85	70~85	68~85	74~85	65~83	66~85	65~85	66~85	74~85	71~83	70~85	72~85	71~85	73~85	73~83	74~85	74~85	75~85	73~85	[DEG]
	1	1	1	1	1	1	1	1	1	1	1	1	1	1	1	1	1	1	1	1	1	1	1	1	1	
	8.7t	8.7t	8.7t	8.7t	8.7t	8.7t	8.7t	8.7t	8.7t	8.7t	8.7t	8.7t	8.7t	8.7t	8.7t	8.7t	8.7t	8.7t	8.7t	8.7t	8.7t	8.7t	8.7t	8.7t	8.7t	

FLJ	1.6m + 12.4m	15.4 t	8.0m x 5.0m	360 °	JPN

m	12.8	12.8	12.8	12.8	12.8	25.8	25.8	25.8	25.8	25.8	30.1	30.1	30.1	30.1	30.1	30.1	30.1	30.1	30.1	30.1	34.4	34.4	34.4	34.4	34.4	m
°	5	15	30	45	60	5	15	30	45	60	5	15	30	45	60	5	15	30	45	60	5	15	30	45	60	°
3.0																										3.0
3.5	4.3																									3.5
4.0	4.3																									4.0
4.5	4.3																									4.5
5.0	4.3																									5.0
6.0	4.3	4.3				4.3																				6.0
7.0	4.3	4.3				4.3	4.3				4.3					4.3										7.0
8.0	4.3	4.3				4.3	4.3				4.3	4.3				4.3	4.3				4.3	4.3				8.0
9.0	4.3	4.3	4.3			4.3	4.3				4.3	4.3				4.3	4.3				4.3	4.3				9.0
10.0	4.3	4.3	4.1			4.3	4.3	4.3			4.3	4.3				4.3	4.3				4.3	4.3				10.0
11.0	4.3	4.3	3.9	3.2		4.3	4.3	4.3			4.3	4.3	4.3			4.3	4.3	4.3			4.3	4.3	4.3			11.0
12.0	4.3	4.3	3.7	3.1		4.3	4.3	4.3	3.3		4.3	4.3	4.3			4.3	4.3	4.3			4.3	4.3	4.3			12.0
14.0	4.1	3.8	3.4	2.9		4.3	4.3	4.0	3.2	2.4	4.3	4.3	4.2	3.2	2.4	4.3	4.3	4.2	3.2	2.4	4.3	4.3	4.3	3.3		14.0
16.0	3.6	3.4	3.1	2.7		4.3	4.3	3.7	3.0	2.4	4.3	4.3	3.9	3.1	2.4	4.3	4.3	3.9	3.1	2.4	4.3	4.3	4.0	3.1	2.4	16.0
18.0	3.2	3.1	2.9			4.3	4.2	3.5	2.9		4.3	4.3	3.7	3.0		4.3	4.3	3.7	3.0		4.3	4.3	3.8	3.0	2.3	18.0
20.0	2.9	2.9				4.3	3.9	3.3	2.8		4.3	4.2	3.5	2.9		4.3	4.2	3.5	2.9		4.3	4.3	3.6	2.9		20.0
22.0	2.6	2.7				4.0	3.6	3.1	2.7		3.5	3.9	3.3	2.8		4.2	3.9	3.3	2.8		3.7	4.2	3.4	2.8		22.0
24.0						3.1	3.4	3.0			2.6	3.0	3.1	2.7		3.3	3.7	3.1	2.7		2.8	3.2	3.3	2.8		24.0
26.0						2.4	2.7	2.9			1.8	2.2	2.6			2.5	2.8	3.0			2.0	2.4	2.8	2.7		26.0
28.0						1.7	2.0	2.3				1.5	1.9			1.9	2.1	2.5				1.7	2.1			28.0
30.0							1.4									1.3	1.5	1.8					1.4			30.0
32.0																		1.3								32.0
34.0																										34.0
36.0																										36.0
38.0																										38.0
40.0																										40.0
44.0																										44.0
48.0																										48.0
52.0																										52.0
56.0																										56.0
60.0																										60.0
64.0																										64.0
68.0																										68.0
72.0																										72.0
1	0	0	0	0		46	46	46	46	46	92	92	92	92	92	46	46	46	46	46	92	92	92	92	92	1
2	0	0	0	0		46	46	46	46	46	46	46	46	46	46	46	46	46	46	46	46	46	46	46	46	2
3	0	0	0	0		46	46	46	46	46	46	46	46	46	46	46	46	46	46	46	46	46	46	46	46	3
4	0	0	0	0		0	0	0	0	0	0	0	0	0	0	46	46	46	46	46	46	46	46	46	46	4
5	0	0	0	0		0	0	0	0	0	0	0	0	0	0	0	0	0	0	0	0	0	0	0	0	5
ID	1	1	1	1		66	66	66	66	66	67	67	67	67	67	54	54	54	54	54	55	55	55	55	55	ID
[DEG]	0~83	0~85	0~85	0~85		42~83	39~85	47~85	58~85	76~85	52~83	51~85	54~85	59~85	75~85	44~83	47~85	45~85	59~85	75~85	56~83	56~85	55~85	60~85	74~85	[DEG]
	1	1	1	1		1	1	1	1	1	1	1	1	1	1	1	1	1	1	1	1	1	1	1	1	
	8.7t	8.7t	8.7t	8.7t		8.7t	8.7t	8.7t	8.7t	8.7t	8.7t	8.7t	8.7t	8.7t	8.7t	8.7t	8.7t	8.7t	8.7t	8.7t	8.7t	8.7t	8.7t	8.7t	8.7t	

FLJ	1.6m + 12.4m	15.4 t	8.0m x 5.0m	360 °	JPN

m	34.4	34.4	34.4	34.4	34.4	38.7	38.7	38.7	38.7	38.7	43.0	43.0	43.0	43.0	43.0	43.0	43.0	43.0	43.0	43.0	47.4	47.4	47.4	47.4	47.4	m
°	5	15	30	45	60	5	15	30	45	60	5	15	30	45	60	5	15	30	45	60	5	15	30	45	60	°
3.0																										3.0
3.5																										3.5
4.0																										4.0
4.5																										4.5
5.0																										5.0
6.0																										6.0
7.0	4.3																									7.0
8.0	4.3	4.3				4.3																				8.0
9.0	4.3	4.3				4.3	4.3				4.3					4.3										9.0
10.0	4.3	4.3				4.3	4.3				4.3	4.3				4.3	4.3				4.3					10.0
11.0	4.3	4.3	4.3			4.3	4.3				4.3	4.3				4.3	4.3				4.3	4.3				11.0
12.0	4.3	4.3	4.3			4.3	4.3	4.3			4.3	4.3				4.3	4.3				4.3	4.3				12.0
14.0	4.3	4.3	4.2	3.3		4.3	4.3	4.2	3.3		4.3	4.3	4.2			4.3	4.3	4.1			4.3	4.3	4.2			14.0
16.0	4.3	4.3	4.0	3.1	2.4	4.3	4.3	4.0	3.2	2.4	4.3	4.3	4.0	3.2	2.4	4.3	4.3	3.9	3.2		4.3	4.3	4.0	3.3		16.0
18.0	4.3	4.3	3.8	3.0	2.3	4.3	4.3	3.9	3.1	2.3	4.3	4.3	3.9	3.1	2.4	4.3	4.3	3.7	3.1	2.4	4.3	4.3	3.8	3.2	2.4	18.0
20.0	4.3	4.3	3.6	2.9		4.3	4.3	3.7	3.0	2.3	4.3	4.3	3.7	3.0	2.3	4.3	4.3	3.6	3.0	2.3	4.3	4.3	3.7	3.1	2.3	20.0
22.0	4.3	4.2	3.4	2.8		3.9	4.3	3.6	2.9		3.8	4.3	3.6	2.9		4.3	4.2	3.5	2.9		3.8	4.3	3.6	3.0	2.3	22.0
24.0	3.5	3.9	3.3	2.8		3.0	3.4	3.4	2.8		2.9	3.3	3.5	2.9		4.1	4.0	3.4	2.9		2.9	3.3	3.4	2.9		24.0
26.0	2.7	3.1	3.1	2.7		2.2	2.6	3.1	2.7		2.1	2.5	3.0	2.8		3.3	3.6	3.3	2.8			2.5	3.0	2.8		26.0
28.0	2.1	2.4	2.7			1.6	1.9	2.4	2.7			1.8	2.3	2.6		2.7	2.9	3.2	2.7				2.3	2.7		28.0
30.0	1.5	1.8	2.1					1.7						1.9		2.1	2.4	2.7	2.7					2.0		30.0
32.0			1.5													1.6	1.8	2.1								32.0
34.0																	1.4	1.7								34.0
36.0																										36.0
38.0																										38.0
40.0																										40.0
44.0																										44.0
48.0																										48.0
52.0																										52.0
56.0																										56.0
60.0																										60.0
64.0																										64.0
68.0																										68.0
72.0																										72.0
1	46	46	46	46	46	92	92	92	92	92	92	92	92	92	92	0	0	0	0	0	92	92	92	92	92	1
2	46	46	46	46	46	46	46	46	46	46	92	92	92	92	92	46	46	46	46	46	92	92	92	92	92	2
3	46	46	46	46	46	46	46	46	46	46	46	46	46	46	46	92	92	92	92	92	92	92	92	92	92	3
4	46	46	46	46	46	46	46	46	46	46	46	46	46	46	46	92	92	92	92	92	46	46	46	46	46	4
5	46	46	46	46	46	46	46	46	46	46	46	46	46	46	46	92	92	92	92	92	46	46	46	46	46	5
ID	49	49	49	49	49	50	50	50	50	50	42	42	42	42	42	21	21	21	21	21	38	38	38	38	38	ID
[DEG]	50~83	52~85	51~85	60~85	74~85	57~83	59~85	59~85	61~85	76~85	63~83	63~85	65~85	64~85	75~85	56~83	55~85	58~85	59~85	75~85	68~83	68~85	68~85	67~85	75~85	[DEG]
	1	1	1	1	1	1	1	1	1	1	1	1	1	1	1	1	1	1	1	1	1	1	1	1	1	
	8.7t	8.7t	8.7t	8.7t	8.7t	8.7t	8.7t	8.7t	8.7t	8.7t	8.7t	8.7t	8.7t	8.7t	8.7t	8.7t	8.7t	8.7t	8.7t	8.7t	8.7t	8.7t	8.7t	8.7t	8.7t	

m	47.4	47.4	47.4	47.4	47.4	51.7	51.7	51.7	51.7	51.7	51.7	51.7	51.7	51.7	51.7	56.0	56.0	56.0	56.0	56.0	60.0	60.0	60.0	60.0	60.0	m
°	5	15	30	45	60	5	15	30	45	60	5	15	30	45	60	5	15	30	45	60	5	15	30	45	60	°
3.0																										3.0
3.5																										3.5
4.0																										4.0
4.5																										4.5
5.0																										5.0
6.0																										6.0
7.0																										7.0
8.0																										8.0
9.0																										9.0
10.0	4.3																									10.0
11.0	4.3	4.3				4.3					4.3															11.0
12.0	4.3	4.3				4.3	4.3				4.3	4.3				4.3										12.0
14.0	4.3	4.3	4.1			4.3	4.3				4.3	4.3				4.3	4.3				3.3	3.3				14.0
16.0	4.3	4.3	4.0	3.3		4.3	4.3	3.9			4.3	4.3	3.9			4.3	4.3	3.8			3.3	3.3				16.0
18.0	4.3	4.3	3.8	3.2	2.4	4.3	4.3	3.8	3.2	2.4	4.3	4.3	3.7	3.2	2.4	4.3	4.3	3.7	3.2		3.3	3.3	3.3			18.0
20.0	4.3	4.3	3.7	3.1	2.3	4.3	4.3	3.7	3.1	2.3	4.3	4.3	3.6	3.1	2.3	4.3	4.3	3.6	3.1	2.3	3.3	3.3	3.3	3.1	2.3	20.0
22.0	4.3	4.3	3.5	3.0	2.3	3.9	4.3	3.5	3.0	2.3	4.3	4.2	3.5	3.0	2.3	4.1	4.2	3.5	3.1	2.3	3.3	3.3	3.3	3.0	2.3	22.0
24.0	3.4	3.8	3.4	2.9		3.0	3.4	3.4	2.9		3.5	3.9	3.4	2.9		3.1	3.6	3.4	3.0	2.3	3.1	3.3	3.3	3.0	2.3	24.0
26.0	2.6	3.0	3.3	2.8			2.6	3.1	2.9		2.7	3.1	3.2	2.9			2.8	3.2	2.9			2.7	3.2	2.9		26.0
28.0	1.9	2.3	2.7	2.8				2.4	2.8		2.1	2.4	2.9	2.8				2.6	2.9					2.8		28.0
30.0		1.7	2.1	2.4					2.1			1.8	2.2	2.5					2.3							30.0
32.0				1.8									1.7	2.0												32.0
34.0																										34.0
36.0																										36.0
38.0																										38.0
40.0																										40.0
44.0																										44.0
48.0																										48.0
52.0																										52.0
56.0																										56.0
60.0																										60.0
64.0																										64.0
68.0																										68.0
72.0																										72.0
1	46	46	46	46	46	92	92	92	92	92	46	46	46	46	46	92	92	92	92	92	100	100	100	100	100	1
2	92	92	92	92	92	92	92	92	92	92	92	92	92	92	92	92	92	92	92	92	100	100	100	100	100	2
3	92	92	92	92	92	92	92	92	92	92	92	92	92	92	92	92	92	92	92	92	100	100	100	100	100	3
4	92	92	92	92	92	92	92	92	92	92	92	92	92	92	92	92	92	92	92	92	100	100	100	100	100	4
5	46	46	46	46	46	46	46	46	46	46	92	92	92	92	92	92	92	92	92	92	100	100	100	100	100	5
ID	31	31	31	31	31	32	32	32	32	32	23	23	23	23	23	24	24	24	24	24	16	16	16	16	16	ID
[DEG]	63~83	63~85	65~85	64~85	75~85	70~83	70~85	70~85	69~85	74~85	66~83	66~85	66~85	67~85	74~85	72~83	72~85	72~85	72~85	74~85	73~83	73~85	76~85	75~85	74~85	[DEG]
	1	1	1	1	1	1	1	1	1	1	1	1	1	1	1	1	1	1	1	1	1	1	1	1	1	
	8.7t	8.7t	8.7t	8.7t	8.7t	8.7t	8.7t	8.7t	8.7t	8.7t	8.7t	8.7t	8.7t	8.7t	8.7t	8.7t	8.7t	8.7t	8.7t	8.7t	8.7t	8.7t	8.7t	8.7t	8.7t	

フルオートラフィングジブ

FLJ	1.6m + 17.4m	15.4 t	8.0m x 5.0m	360 °	JPN

m	12.8	12.8	12.8	12.8	12.8	25.8	25.8	25.8	25.8	25.8	30.1	30.1	30.1	30.1	30.1	30.1	30.1	30.1	30.1	30.1	34.4	34.4	34.4	34.4	34.4	m
°	5	15	30	45	60	5	15	30	45	60	5	15	30	45	60	5	15	30	45	60	5	15	30	45	60	°
3.0																										3.0
3.5																										3.5
4.0																										4.0
4.5																										4.5
5.0	3.3																									5.0
6.0	3.3																									6.0
7.0	3.3																									7.0
8.0	3.3	3.3				3.3					3.3					3.3										8.0
9.0	3.3	3.3				3.3	3.3				3.3					3.3					3.3					9.0
10.0	3.3	3.3				3.3	3.3				3.3	3.3				3.3	3.3				3.3					10.0
11.0	3.3	3.3				3.3	3.3				3.3	3.3				3.3	3.3				3.3	3.3				11.0
12.0	3.3	3.2	2.6			3.3	3.3				3.3	3.3				3.3	3.3				3.3	3.3				12.0
14.0	3.3	2.9	2.4			3.3	3.2	2.6			3.3	3.3	2.7			3.3	3.2	2.6			3.3	3.3				14.0
16.0	2.9	2.6	2.2	1.8		3.3	3.0	2.5			3.3	3.1	2.5			3.3	3.0	2.5			3.3	3.1	2.5			16.0
18.0	2.5	2.3	2.0	1.7		3.3	2.8	2.3	1.9		3.3	2.9	2.4	1.9		3.3	2.9	2.4	1.9		3.3	2.9	2.4	1.9		18.0
20.0	2.3	2.1	1.8	1.6		3.1	2.6	2.2	1.8		3.2	2.7	2.2	1.8	1.5	3.2	2.7	2.2	1.8	1.5	3.3	2.8	2.3	1.8	1.5	20.0
22.0	2.0	1.9	1.7			2.9	2.5	2.0	1.7		3.0	2.6	2.1	1.7	1.5	3.0	2.6	2.1	1.7	1.5	3.1	2.6	2.2	1.8	1.5	22.0
24.0	1.8	1.8	1.6			2.7	2.4	1.9	1.6		2.8	2.5	2.0	1.7		2.8	2.4	2.0	1.7		2.9	2.5	2.1	1.7		24.0
26.0	1.7	1.6				2.5	2.2	1.8	1.6		2.6	2.3	1.9	1.6		2.6	2.3	1.9	1.6		2.7	2.4	2.0	1.6		26.0
28.0	1.5					2.3	2.1	1.7	1.5		1.9	2.2	1.8	1.6		2.5	2.2	1.8	1.6		2.0	2.3	1.9	1.6		28.0
30.0						1.9	1.9	1.7				1.8	1.7	1.5		2.0	2.1	1.7	1.5		1.5	1.9	1.8	1.5		30.0
32.0						1.4	1.7	1.6					1.7			1.5	1.8	1.7					1.7	1.5		32.0
34.0							1.2										1.3	1.6								34.0
36.0																		1.2								36.0
38.0																										38.0
40.0																										40.0
44.0																										44.0
48.0																										48.0
52.0																										52.0
56.0																										56.0
60.0																										60.0
64.0																										64.0
68.0																										68.0
72.0																										72.0
1	0	0	0	0		46	46	46	46		92	92	92	92	92	46	46	46	46	46	92	92	92	92	92	1
2	0	0	0	0		46	46	46	46		46	46	46	46	46	46	46	46	46	46	46	46	46	46	46	2
3	0	0	0	0		46	46	46	46		46	46	46	46	46	46	46	46	46	46	46	46	46	46	46	3
4	0	0	0	0		0	0	0	0		0	0	0	0	0	46	46	46	46	46	46	46	46	46	46	4
5	0	0	0	0		0	0	0	0		0	0	0	0	0	0	0	0	0	0	0	0	0	0	0	5
ID	1	1	1	1		66	66	66	66		67	67	67	67	67	54	54	54	54	54	55	55	55	55	55	ID
[DEG]	0~83	0~85	0~85	0~85		42~83	41~85	44~85	60~85		54~83	54~85	55~85	57~85	73~85	48~83	47~85	47~85	57~85	73~85	55~83	58~85	59~85	58~85	75~85	[DEG]
	1	1	1	1		1	1	1	1		1	1	1	1	1	1	1	1	1	1	1	1	1	1	1	
	8.7t	8.7t	8.7t	8.7t		8.7t	8.7t	8.7t	8.7t		8.7t	8.7t	8.7t	8.7t	8.7t	8.7t	8.7t	8.7t	8.7t	8.7t	8.7t	8.7t	8.7t	8.7t	8.7t	

m	34.4	34.4	34.4	34.4	34.4	38.7	38.7	38.7	38.7	38.7	43.0	43.0	43.0	43.0	43.0	43.0	43.0	43.0	43.0	43.0	47.4	47.4	47.4	47.4	47.4	m
°	5	15	30	45	60	5	15	30	45	60	5	15	30	45	60	5	15	30	45	60	5	15	30	45	60	°
3.0																										3.0
3.5																										3.5
4.0																										4.0
4.5																										4.5
5.0																										5.0
6.0																										6.0
7.0																										7.0
8.0																										8.0
9.0	3.3																									9.0
10.0	3.3					3.3																				10.0
11.0	3.3	3.3				3.3					3.3					2.9										11.0
12.0	3.3	3.3				3.3	3.3				3.3	3.3				2.9					3.2					12.0
14.0	3.3	3.2				3.3	3.3				3.3	3.2				2.9	2.9				3.2	3.2				14.0
16.0	3.3	3.0	2.5			3.3	3.1	2.5			3.3	3.1				2.9	2.9				3.2	3.1				16.0
18.0	3.3	2.9	2.4	1.9		3.3	2.9	2.4			3.3	2.9	2.4			2.9	2.8	2.3			3.2	2.9	2.4			18.0
20.0	3.2	2.7	2.3	1.8	1.5	3.3	2.8	2.3	1.9		3.3	2.8	2.3	1.9		2.9	2.7	2.2	1.9		3.2	2.8	2.3			20.0
22.0	3.0	2.6	2.2	1.8	1.5	3.1	2.6	2.2	1.8	1.5	3.1	2.7	2.2	1.8	1.5	2.9	2.6	2.2	1.8	1.5	3.1	2.7	2.2	1.8		22.0
24.0	2.9	2.5	2.1	1.7		2.9	2.5	2.1	1.7	1.5	3.0	2.5	2.1	1.8	1.5	2.9	2.5	2.1	1.8	1.5	3.0	2.5	2.1	1.8	1.5	24.0
26.0	2.7	2.4	2.0	1.6		2.8	2.4	2.1	1.7		2.7	2.4	2.1	1.7		2.7	2.4	2.0	1.7		2.7	2.4	2.1	1.7	1.4	26.0
28.0	2.6	2.3	1.9	1.6		2.2	2.3	2.0	1.6		2.0	2.3	2.0	1.6		2.6	2.3	2.0	1.6		2.0	2.4	2.0	1.7		28.0
30.0	2.1	2.2	1.8	1.5		1.7	2.1	1.9	1.6			1.9	1.9	1.6		2.5	2.2	1.9	1.6			1.9	1.9	1.6		30.0
32.0	1.6	2.0	1.7	1.5			1.5	1.8	1.5				1.9	1.6		2.1	2.1	1.8	1.6				1.9	1.6		32.0
34.0		1.5	1.7					1.5	1.5					1.5		1.7	1.9	1.8	1.5					1.6		34.0
36.0			1.4													1.3	1.5	1.7	1.5							36.0
38.0																		1.5								38.0
40.0																										40.0
44.0																										44.0
48.0																										48.0
52.0																										52.0
56.0																										56.0
60.0																										60.0
64.0																										64.0
68.0																										68.0
72.0																										72.0
1	46	46	46	46	46	92	92	92	92	92	92	92	92	92	92	0	0	0	0	0	92	92	92	92	92	1
2	46	46	46	46	46	46	46	46	46	46	92	92	92	92	92	46	46	46	46	46	92	92	92	92	92	2
3	46	46	46	46	46	46	46	46	46	46	46	46	46	46	46	92	92	92	92	92	92	92	92	92	92	3
4	46	46	46	46	46	46	46	46	46	46	46	46	46	46	46	92	92	92	92	92	46	46	46	46	46	4
5	46	46	46	46	46	46	46	46	46	46	46	46	46	46	46	92	92	92	92	92	46	46	46	46	46	5
ID	49	49	49	49	49	50	50	50	50	50	42	42	42	42	42	21	21	21	21	21	38	38	38	38	38	ID
[DEG]	52~83	52~85	53~85	58~85	75~85	59~83	59~85	60~85	59~85	74~85	64~83	64~85	65~85	65~85	74~85	56~83	58~85	59~85	57~85	74~85	66~83	67~85	68~85	68~85	73~85	[DEG]
	1	1	1	1	1	1	1	1	1	1	1	1	1	1	1	1	1	1	1	1	1	1	1	1	1	
	8.7t	8.7t	8.7t	8.7t	8.7t	8.7t	8.7t	8.7t	8.7t	8.7t	8.7t	8.7t	8.7t	8.7t	8.7t	8.7t	8.7t	8.7t	8.7t	8.7t	8.7t	8.7t	8.7t	8.7t	8.7t	

FLJ	1.6m + 17.4m	15.4 t	8.0m x 5.0m	360 °	JPN

m	47.4	47.4	47.4	47.4	47.4	51.7	51.7	51.7	51.7	51.7	51.7	51.7	51.7	51.7	51.7	56.0	56.0	56.0	56.0	56.0	60.0	60.0	60.0	60.0	60.0	m
°	5	15	30	45	60	5	15	30	45	60	5	15	30	45	60	5	15	30	45	60	5	15	30	45	60	°
3.0																										3.0
3.5																										3.5
4.0																										4.0
4.5																										4.5
5.0																										5.0
6.0																										6.0
7.0																										7.0
8.0																										8.0
9.0																										9.0
10.0																										10.0
11.0																										11.0
12.0	3.1																									12.0
14.0	3.1	3.1				3.2	3.1				3.2	3.0				2.9										14.0
16.0	3.1	3.0				3.2	3.0				3.1	2.9				2.9	2.9				2.8	2.7				16.0
18.0	3.1	2.9	2.4			3.2	2.9				3.1	2.8				2.9	2.8				2.8	2.6				18.0
20.0	3.1	2.7	2.3			3.1	2.7	2.3			3.0	2.7	2.2			2.9	2.7	2.2			2.8	2.6				20.0
22.0	3.1	2.6	2.2	1.8		3.1	2.6	2.2	1.8		2.9	2.6	2.2	1.8		2.9	2.6	2.2			2.7	2.5	2.1			22.0
24.0	2.9	2.5	2.1	1.8	1.5	2.9	2.5	2.1	1.8	1.5	2.9	2.5	2.1	1.8	1.5	2.8	2.5	2.1	1.8		2.7	2.5	2.1	1.8		24.0
26.0	2.8	2.4	2.0	1.7	1.4	2.7	2.4	2.1	1.7	1.4	2.8	2.4	2.0	1.7	1.4	2.8	2.4	2.0	1.8	1.4	2.6	2.4	2.0	1.8	1.4	26.0
28.0	2.5	2.3	2.0	1.7			2.3	2.0	1.7	1.4	2.6	2.3	2.0	1.7	1.4		2.3	2.0	1.7	1.4		2.3	2.0	1.7	1.4	28.0
30.0	1.9	2.2	1.9	1.6				1.9	1.6		2.0	2.2	1.9	1.6				1.9	1.7				1.9	1.7	1.4	30.0
32.0		1.8	1.9	1.6				1.9	1.6			1.9	1.9	1.6				1.9	1.6					1.6		32.0
34.0			1.8	1.6					1.6				1.8	1.6					1.6							34.0
36.0				1.5										1.5												36.0
38.0																										38.0
40.0																										40.0
44.0																										44.0
48.0																										48.0
52.0																										52.0
56.0																										56.0
60.0																										60.0
64.0																										64.0
68.0																										68.0
72.0																										72.0
1	46	46	46	46	46	92	92	92	92	92	46	46	46	46	46	92	92	92	92	92	100	100	100	100	100	1
2	92	92	92	92	92	92	92	92	92	92	92	92	92	92	92	92	92	92	92	92	100	100	100	100	100	2
3	92	92	92	92	92	92	92	92	92	92	92	92	92	92	92	92	92	92	92	92	100	100	100	100	100	3
4	92	92	92	92	92	92	92	92	92	92	92	92	92	92	92	92	92	92	92	92	100	100	100	100	100	4
5	46	46	46	46	46	46	46	46	46	46	92	92	92	92	92	92	92	92	92	92	100	100	100	100	100	5
ID	31	31	31	31	31	32	32	32	32	32	23	23	23	23	23	24	24	24	24	24	16	16	16	16	16	ID
[DEG]	64~83	65~85	66~85	65~85	73~85	70~83	71~85	70~85	70~85	73~85	67~83	67~85	68~85	68~85	73~85	72~83	73~85	72~85	72~85	73~85	74~83	74~85	75~85	75~85	75~85	[DEG]
	1	1	1	1	1	1	1	1	1	1	1	1	1	1	1	1	1	1	1	1	1	1	1	1	1	
	8.7t	8.7t	8.7t	8.7t	8.7t	8.7t	8.7t	8.7t	8.7t	8.7t	8.7t	8.7t	8.7t	8.7t	8.7t	8.7t	8.7t	8.7t	8.7t	8.7t	8.7t	8.7t	8.7t	8.7t	8.7t	

FLJ	1.6m + 7.4m	7.1 t	8.0m x 7.5m	360 °	JPN

m	12.8	12.8	12.8	12.8	12.8	25.8	25.8	25.8	25.8	25.8	30.1	30.1	30.1	30.1	30.1	30.1	30.1	30.1	30.1	30.1	34.4	34.4	34.4	34.4	34.4	m
°	5	15	30	45	60	5	15	30	45	60	5	15	30	45	60	5	15	30	45	60	5	15	30	45	60	°
3.0	7.3																									3.0
3.5	7.3	7.3																								3.5
4.0	7.3	7.3				7.3																				4.0
4.5	7.3	7.3				7.3																				4.5
5.0	7.3	7.3				7.3	7.3				7.3					7.3										5.0
6.0	7.3	7.3	7.3			7.3	7.3				7.3	7.3				7.3	7.3				7.3	7.3				6.0
7.0	7.3	7.3	7.3	5.9		7.3	7.3	7.3			7.3	7.3	7.3			7.3	7.3	7.3			7.3	7.3				7.0
8.0	7.3	7.3	7.0	5.7		7.3	7.3	7.3	6.2		7.3	7.3	7.3			7.3	7.3	7.3			7.3	7.3	7.3			8.0
9.0	7.3	7.3	6.6	5.5		7.3	7.3	7.3	6.0	4.5	7.3	7.3	7.3	6.1		7.3	7.3	7.3	6.1		7.3	7.3	7.3	6.2		9.0
10.0	7.3	7.3	6.3	5.4		7.3	7.3	7.3	5.9	4.5	7.3	7.3	7.3	6.0	4.5	7.3	7.3	7.3	6.0	4.5	7.3	7.3	7.3	6.1	4.5	10.0
11.0	7.3	7.0	6.1	5.2		7.3	7.3	7.3	5.8	4.4	7.3	7.3	7.3	5.9	4.5	7.3	7.3	7.3	5.9	4.5	7.3	7.3	7.3	6.0	4.5	11.0
12.0	7.1	6.5	5.8			7.3	7.3	7.0	5.6		7.3	7.3	7.3	5.8	4.4	7.3	7.3	7.3	5.8	4.4	7.3	7.3	7.3	5.9	4.4	12.0
14.0	6.1	5.9	5.4			7.3	7.3	6.6	5.4		7.3	7.3	6.9	5.6		7.3	7.3	6.9	5.6		7.3	7.3	7.2	5.7	4.4	14.0
16.0	5.4	5.3				7.3	7.3	6.2	5.2		7.3	7.3	6.5	5.4		7.3	7.3	6.5	5.4		7.3	7.3	6.8	5.5		16.0
18.0	4.9					7.3	6.9	5.9	5.1		7.1	7.3	6.2	5.2		7.3	7.3	6.2	5.2		7.3	7.3	6.5	5.3		18.0
20.0						5.5	6.0	5.7			4.6	5.1	5.8	5.1		5.9	6.4	5.9	5.1		5.1	5.6	6.2	5.2		20.0
22.0						3.6	4.0	4.4			2.7	3.2	3.7			4.0	4.4	4.9			3.2	3.6	4.2	4.6		22.0
24.0						2.2	2.5	2.8			1.4	1.8	2.2			2.6	2.9	3.3			1.8	2.2	2.6			24.0
26.0						1.1	1.4						1.0			1.5	1.8	2.0			0.8	1.1	1.5			26.0
28.0																	0.9									28.0
30.0																										30.0
32.0																										32.0
34.0																										34.0
36.0																										36.0
38.0																										38.0
40.0																										40.0
44.0																										44.0
48.0																										48.0
52.0																										52.0
56.0																										56.0
60.0																										60.0
64.0																										64.0
68.0																										68.0
72.0																										72.0
1	0	0	0	0		46	46	46	46	46	92	92	92	92	92	46	46	46	46	46	92	92	92	92	92	1
2	0	0	0	0		46	46	46	46	46	46	46	46	46	46	46	46	46	46	46	46	46	46	46	46	2
3	0	0	0	0		46	46	46	46	46	46	46	46	46	46	46	46	46	46	46	46	46	46	46	46	3
4	0	0	0	0		0	0	0	0	0	0	0	0	0	0	46	46	46	46	46	46	46	46	46	46	4
5	0	0	0	0		0	0	0	0	0	0	0	0	0	0	0	0	0	0	0	0	0	0	0	0	5
ID	1	1	1	1		66	66	66	66	66	67	67	67	67	67	54	54	54	54	54	55	55	55	55	55	ID
[DEG]	0~83	0~85	0~85	0~85		36~83	38~85	45~85	61~85	74~85	49~83	50~85	48~85	62~85	77~85	45~83	41~85	43~85	61~85	77~85	51~83	52~85	54~85	58~85	76~85	[DEG]
	1	1	1	1		1	1	1	1	1	1	1	1	1	1	1	1	1	1	1	1	1	1	1	1	
	8.7t	8.7t	8.7t	8.7t		8.7t	8.7t	8.7t	8.7t	8.7t	8.7t	8.7t	8.7t	8.7t	8.7t	8.7t	8.7t	8.7t	8.7t	8.7t	8.7t	8.7t	8.7t	8.7t	8.7t	

フルオートラフィングジブ

FLJ	1.6m + 7.4m	7.1 t	8.0m x 7.5m	360 °	JPN

m	34.4	34.4	34.4	34.4	34.4	38.7	38.7	38.7	38.7	38.7	43.0	43.0	43.0	43.0	43.0	43.0	43.0	43.0	43.0	43.0	47.4	47.4	47.4	47.4	47.4	m
°	5	15	30	45	60	5	15	30	45	60	5	15	30	45	60	5	15	30	45	60	5	15	30	45	60	°
3.0																										3.0
3.5																										3.5
4.0																										4.0
4.5																										4.5
5.0																										5.0
6.0	7.3	7.3																								6.0
7.0	7.3	7.3				7.3	7.3																			7.0
8.0	7.3	7.3	7.3			7.3	7.3				7.3	7.3				7.3	7.3					7.3				8.0
9.0	7.3	7.3	7.3	6.2		7.3	7.3	7.3			7.3	7.3	7.3			7.3	7.3				7.3	7.3				9.0
10.0	7.3	7.3	7.3	6.1	4.5	7.3	7.3	7.3	6.2		7.3	7.3	7.3			7.3	7.3	7.3			7.3	7.3	7.3			10.0
11.0	7.3	7.3	7.3	6.0	4.5	7.3	7.3	7.3	6.1	4.5	7.3	7.3	7.3	6.1	4.5	7.3	7.3	7.3	6.1		7.3	7.3	7.3			11.0
12.0	7.3	7.3	7.3	5.9	4.4	7.3	7.3	7.3	6.0	4.5	7.3	7.3	7.3	6.0	4.5	7.3	7.3	7.3	6.0	4.5	7.3	7.3	7.3	6.1	4.5	12.0
14.0	7.3	7.3	7.2	5.7	4.4	7.3	7.3	7.3	5.8	4.4	7.3	7.3	7.3	5.8	4.4	7.3	7.3	7.3	5.8	4.4	7.3	7.3	7.3	5.9	4.4	14.0
16.0	7.3	7.3	6.8	5.5		7.3	7.3	7.0	5.6		7.3	7.3	7.3	5.7	4.4	7.3	7.3	7.3	5.7	4.4	7.3	7.3	7.3	5.8	4.4	16.0
18.0	7.3	7.3	6.5	5.3		7.3	7.3	6.7	5.4		7.3	7.3	6.9	5.5		7.3	7.3	6.9	5.5		7.3	7.3	7.1	5.6		18.0
20.0	6.5	7.0	6.2	5.2		5.7	6.2	6.4	5.3		5.5	6.0	6.7	5.4		7.3	7.3	6.7	5.4		5.6	6.1	6.9	5.5		20.0
22.0	4.5	4.9	5.4	5.1		3.8	4.2	4.8	5.2		3.6	4.0	4.6	5.1		5.7	6.1	6.4	5.3		3.7	4.1	4.7	5.2		22.0
24.0	3.1	3.4	3.8			2.4	2.7	3.2	3.5		2.2	2.6	3.1	3.4		4.2	4.5	4.9	5.2		2.3	2.7	3.2	3.5		24.0
26.0	2.0	2.3	2.6			1.3	1.6	2.0			1.1	1.5	1.9	2.1		3.1	3.3	3.7	3.9		1.2	1.5	2.0	2.3		26.0
28.0	1.1	1.3	1.6					1.0					0.9			2.1	2.4	2.6					1.0	1.3		28.0
30.0			0.8													1.4	1.6	1.8								30.0
32.0																0.8	1.0	1.2								32.0
34.0																										34.0
36.0																										36.0
38.0																										38.0
40.0																										40.0
44.0																										44.0
48.0																										48.0
52.0																										52.0
56.0																										56.0
60.0																										60.0
64.0																										64.0
68.0																										68.0
72.0																										72.0
1	46	46	46	46	46	92	92	92	92	92	92	92	92	92	92	0	0	0	0	0	92	92	92	92	92	1
2	46	46	46	46	46	46	46	46	46	46	92	92	92	92	92	46	46	46	46	46	92	92	92	92	92	2
3	46	46	46	46	46	46	46	46	46	46	46	46	46	46	46	92	92	92	92	92	92	92	92	92	92	3
4	46	46	46	46	46	46	46	46	46	46	46	46	46	46	46	92	92	92	92	92	46	46	46	46	46	4
5	46	46	46	46	46	46	46	46	46	46	46	46	46	46	46	92	92	92	92	92	46	46	46	46	46	5
ID	49	49	49	49	49	50	50	50	50	50	42	42	42	42	42	21	21	21	21	21	38	38	38	38	38	ID
[DEG]	47~83	48~85	46~85	58~85	75~85	55~83	57~85	55~85	59~85	75~85	59~83	60~85	59~85	60~85	74~85	51~83	52~85	53~85	61~85	74~85	62~83	63~85	62~85	63~85	74~85	[DEG]
	1	1	1	1	1	1	1	1	1	1	1	1	1	1	1	1	1	1	1	1	1	1	1	1	1	
	8.7t	8.7t	8.7t	8.7t	8.7t	8.7t	8.7t	8.7t	8.7t	8.7t	8.7t	8.7t	8.7t	8.7t	8.7t	8.7t	8.7t	8.7t	8.7t	8.7t	8.7t	8.7t	8.7t	8.7t	8.7t	

m	47.4	47.4	47.4	47.4	47.4	51.7	51.7	51.7	51.7	51.7	51.7	51.7	51.7	51.7	51.7	56.0	56.0	56.0	56.0	56.0	60.0	60.0	60.0	60.0	60.0	m
°	5	15	30	45	60	5	15	30	45	60	5	15	30	45	60	5	15	30	45	60	5	15	30	45	60	°
3.0																										3.0
3.5																										3.5
4.0																										4.0
4.5																										4.5
5.0																										5.0
6.0																										6.0
7.0																										7.0
8.0		7.3																								8.0
9.0	7.3	7.3					7.3					6.4														9.0
10.0	7.3	7.3	7.3			7.3	7.3				6.4	6.4					6.3									10.0
11.0	7.3	7.3	7.3			7.3	7.3	7.3			6.4	6.4	6.4			6.3	6.3					5.3				11.0
12.0	7.3	7.3	7.3	6.1	4.5	7.3	7.3	7.3			6.4	6.4	6.4			6.3	6.3	6.3			5.3	5.3				12.0
14.0	7.3	7.3	7.3	5.9	4.4	7.3	7.3	7.3	6.0	4.5	6.4	6.4	6.4	6.0	4.5	6.3	6.3	6.3	6.0	4.5	5.3	5.3	5.3			14.0
16.0	7.3	7.3	7.3	5.8	4.4	7.3	7.3	7.3	5.8	4.4	6.4	6.4	6.4	5.8	4.4	6.3	6.3	6.3	5.9	4.4	5.3	5.3	5.3	5.3	4.4	16.0
18.0	7.3	7.3	7.1	5.6		7.3	7.3	7.3	5.7	4.3	6.4	6.4	6.4	5.7	4.3	6.3	6.3	6.3	5.7	4.4	5.3	5.3	5.3	5.3	4.4	18.0
20.0	6.5	7.0	6.9	5.5		5.8	6.4	7.0	5.5		6.4	6.4	6.4	5.5		6.2	6.3	6.3	5.6		5.3	5.3	5.3	5.3	4.3	20.0
22.0	4.5	5.0	5.5	5.4		3.9	4.4	5.0	5.4		4.9	5.3	5.8	5.4		4.3	4.7	5.3	5.5		4.2	4.7	5.3	5.3		22.0
24.0	3.1	3.4	3.9	4.2		2.5	2.9	3.4	3.8		3.4	3.8	4.2	4.5		2.8	3.2	3.7	4.1		2.8	3.2	3.7	4.0		24.0
26.0	2.0	2.3	2.7	2.9		1.4	1.8	2.2	2.5		2.3	2.6	3.0	3.2		1.7	2.1	2.5	2.8		1.7	2.0	2.5	2.8		26.0
28.0	1.1	1.4	1.7	1.9			0.9	1.2	1.5		1.4	1.7	2.0	2.2		0.9	1.2	1.5	1.8				1.5	1.8		28.0
30.0			0.9									0.9	1.2	1.4					1.0							30.0
32.0																										32.0
34.0																										34.0
36.0																										36.0
38.0																										38.0
40.0																										40.0
44.0																										44.0
48.0																										48.0
52.0																										52.0
56.0																										56.0
60.0																										60.0
64.0																										64.0
68.0																										68.0
72.0																										72.0
1	46	46	46	46	46	92	92	92	92	92	46	46	46	46	46	92	92	92	92	92	100	100	100	100	100	1
2	92	92	92	92	92	92	92	92	92	92	92	92	92	92	92	92	92	92	92	92	100	100	100	100	100	2
3	92	92	92	92	92	92	92	92	92	92	92	92	92	92	92	92	92	92	92	92	100	100	100	100	100	3
4	92	92	92	92	92	92	92	92	92	92	92	92	92	92	92	92	92	92	92	92	100	100	100	100	100	4
5	46	46	46	46	46	46	46	46	46	46	92	92	92	92	92	92	92	92	92	92	100	100	100	100	100	5
ID	31	31	31	31	31	32	32	32	32	32	23	23	23	23	23	24	24	24	24	24	16	16	16	16	16	ID
[DEG]	60~83	61~85	60~85	61~85	74~85	65~83	64~85	65~85	66~85	74~85	63~83	62~85	63~85	64~85	74~85	65~83	66~85	68~85	66~85	74~85	69~83	70~85	70~85	70~85	73~85	[DEG]
	1	1	1	1	1	1	1	1	1	1	1	1	1	1	1	1	1	1	1	1	1	1	1	1	1	
	8.7t	8.7t	8.7t	8.7t	8.7t	8.7t	8.7t	8.7t	8.7t	8.7t	8.7t	8.7t	8.7t	8.7t	8.7t	8.7t	8.7t	8.7t	8.7t	8.7t	8.7t	8.7t	8.7t	8.7t	8.7t	

FLJ	1.6m + 12.4m	7.1 t	8.0m x 7.5m	360 °	JPN

m	12.8	12.8	12.8	12.8	12.8	25.8	25.8	25.8	25.8	25.8	30.1	30.1	30.1	30.1	30.1	30.1	30.1	30.1	30.1	30.1	34.4	34.4	34.4	34.4	34.4	m
°	5	15	30	45	60	5	15	30	45	60	5	15	30	45	60	5	15	30	45	60	5	15	30	45	60	°
3.0																										3.0
3.5	4.3																									3.5
4.0	4.3																									4.0
4.5	4.3																									4.5
5.0	4.3																									5.0
6.0	4.3	4.3				4.3																				6.0
7.0	4.3	4.3				4.3	4.3				4.3					4.3										7.0
8.0	4.3	4.3				4.3	4.3				4.3	4.3				4.3	4.3				4.3	4.3				8.0
9.0	4.3	4.3	4.3			4.3	4.3				4.3	4.3				4.3	4.3				4.3	4.3				9.0
10.0	4.3	4.3	4.1			4.3	4.3	4.3			4.3	4.3				4.3	4.3				4.3	4.3				10.0
11.0	4.3	4.3	3.9	3.2		4.3	4.3	4.3			4.3	4.3	4.3			4.3	4.3	4.3			4.3	4.3	4.3			11.0
12.0	4.3	4.3	3.7	3.1		4.3	4.3	4.3	3.3		4.3	4.3	4.3			4.3	4.3	4.3			4.3	4.3	4.3			12.0
14.0	4.1	3.8	3.4	2.9		4.3	4.3	4.0	3.2	2.4	4.3	4.3	4.2	3.2	2.4	4.3	4.3	4.2	3.2	2.4	4.3	4.3	4.3	3.3		14.0
16.0	3.6	3.4	3.1	2.7		4.3	4.3	3.7	3.0	2.4	4.3	4.3	3.9	3.1	2.4	4.3	4.3	3.9	3.1	2.4	4.3	4.3	4.0	3.1	2.4	16.0
18.0	3.2	3.1	2.9			4.3	4.2	3.5	2.9		4.3	4.3	3.7	3.0		4.3	4.3	3.7	3.0		4.3	4.3	3.8	3.0	2.3	18.0
20.0	2.9	2.9				4.3	3.9	3.3	2.8		4.3	4.2	3.5	2.9		4.3	4.2	3.5	2.9		4.3	4.3	3.6	2.9		20.0
22.0	2.6	2.7				4.0	3.6	3.1	2.7		4.3	3.9	3.3	2.8		4.3	3.9	3.3	2.8		4.3	4.2	3.4	2.8		22.0
24.0						3.7	3.4	3.0			2.8	3.4	3.1	2.7		3.9	3.7	3.1	2.7		3.1	3.7	3.3	2.8		24.0
26.0						2.5	2.9	2.9			1.7	2.2	2.9			2.7	3.2	3.0			2.0	2.5	3.1	2.7		26.0
28.0						1.6	2.0	2.4			0.9	1.3	1.8			1.8	2.2	2.7			1.1	1.5	2.1			28.0
30.0						0.9	1.2						0.9			1.1	1.4	1.8				0.8	1.2			30.0
32.0																		1.0								32.0
34.0																										34.0
36.0																										36.0
38.0																										38.0
40.0																										40.0
44.0																										44.0
48.0																										48.0
52.0																										52.0
56.0																										56.0
60.0																										60.0
64.0																										64.0
68.0																										68.0
72.0																										72.0
1	0	0	0	0		46	46	46	46	46	92	92	92	92	92	46	46	46	46	46	92	92	92	92	92	1
2	0	0	0	0		46	46	46	46	46	46	46	46	46	46	46	46	46	46	46	46	46	46	46	46	2
3	0	0	0	0		46	46	46	46	46	46	46	46	46	46	46	46	46	46	46	46	46	46	46	46	3
4	0	0	0	0		0	0	0	0	0	0	0	0	0	0	46	46	46	46	46	46	46	46	46	46	4
5	0	0	0	0		0	0	0	0	0	0	0	0	0	0	0	0	0	0	0	0	0	0	0	0	5
ID	1	1	1	1		66	66	66	66	66	67	67	67	67	67	54	54	54	54	54	55	55	55	55	55	ID
[DEG]	0~83	0~85	0~85	0~85		37~83	39~85	47~85	58~85	76~85	48~83	51~85	50~85	59~85	75~85	44~83	47~85	45~85	59~85	75~85	53~83	52~85	55~85	60~85	74~85	[DEG]
	1	1	1	1		1	1	1	1	1	1	1	1	1	1	1	1	1	1	1	1	1	1	1	1	
	8.7t	8.7t	8.7t	8.7t		8.7t	8.7t	8.7t	8.7t	8.7t	8.7t	8.7t	8.7t	8.7t	8.7t	8.7t	8.7t	8.7t	8.7t	8.7t	8.7t	8.7t	8.7t	8.7t	8.7t	

m	34.4	34.4	34.4	34.4	34.4	38.7	38.7	38.7	38.7	38.7	43.0	43.0	43.0	43.0	43.0	43.0	43.0	43.0	43.0	43.0	47.4	47.4	47.4	47.4	47.4	m
°	5	15	30	45	60	5	15	30	45	60	5	15	30	45	60	5	15	30	45	60	5	15	30	45	60	°
3.0																										3.0
3.5																										3.5
4.0																										4.0
4.5																										4.5
5.0																										5.0
6.0																										6.0
7.0	4.3																									7.0
8.0	4.3	4.3				4.3																				8.0
9.0	4.3	4.3				4.3	4.3				4.3					4.3										9.0
10.0	4.3	4.3				4.3	4.3				4.3	4.3				4.3	4.3				4.3					10.0
11.0	4.3	4.3	4.3			4.3	4.3				4.3	4.3				4.3	4.3				4.3	4.3				11.0
12.0	4.3	4.3	4.3			4.3	4.3	4.3			4.3	4.3				4.3	4.3				4.3	4.3				12.0
14.0	4.3	4.3	4.2	3.3		4.3	4.3	4.2	3.3		4.3	4.3	4.2			4.3	4.3	4.1			4.3	4.3	4.2			14.0
16.0	4.3	4.3	4.0	3.1	2.4	4.3	4.3	4.0	3.2	2.4	4.3	4.3	4.0	3.2	2.4	4.3	4.3	3.9	3.2		4.3	4.3	4.0	3.3		16.0
18.0	4.3	4.3	3.8	3.0	2.3	4.3	4.3	3.9	3.1	2.3	4.3	4.3	3.9	3.1	2.4	4.3	4.3	3.7	3.1	2.4	4.3	4.3	3.8	3.2	2.4	18.0
20.0	4.3	4.3	3.6	2.9		4.3	4.3	3.7	3.0	2.3	4.3	4.3	3.7	3.0	2.3	4.3	4.3	3.6	3.0	2.3	4.3	4.3	3.7	3.1	2.3	20.0
22.0	4.3	4.2	3.4	2.8		4.3	4.3	3.6	2.9		4.3	4.3	3.6	2.9		4.3	4.2	3.5	2.9		4.3	4.3	3.6	3.0	2.3	22.0
24.0	4.2	3.9	3.3	2.8		3.5	4.1	3.4	2.8		3.2	3.9	3.5	2.9		4.3	4.0	3.4	2.9		3.3	3.9	3.4	2.9		24.0
26.0	3.0	3.5	3.1	2.7		2.3	2.9	3.3	2.7		2.1	2.7	3.4	2.8		3.9	3.8	3.3	2.8		2.1	2.7	3.4	2.8		26.0
28.0	2.1	2.5	3.0			1.4	1.9	2.5	2.7		1.2	1.7	2.3	2.7		2.9	3.3	3.2	2.7		1.2	1.7	2.4	2.8		28.0
30.0	1.4	1.7	2.1				1.1	1.6				0.9	1.5	1.8		2.1	2.5	2.9	2.7			1.0	1.5	1.9		30.0
32.0	0.8	1.0	1.4					0.9					0.8			1.5	1.8	2.2					0.8	1.1		32.0
34.0			0.8													1.0	1.2	1.5								34.0
36.0																		1.0								36.0
38.0																										38.0
40.0																										40.0
44.0																										44.0
48.0																										48.0
52.0																										52.0
56.0																										56.0
60.0																										60.0
64.0																										64.0
68.0																										68.0
72.0																										72.0
1	46	46	46	46	46	92	92	92	92	92	92	92	92	92	92	0	0	0	0	0	92	92	92	92	92	1
2	46	46	46	46	46	46	46	46	46	46	92	92	92	92	92	46	46	46	46	46	92	92	92	92	92	2
3	46	46	46	46	46	46	46	46	46	46	46	46	46	46	46	92	92	92	92	92	92	92	92	92	92	3
4	46	46	46	46	46	46	46	46	46	46	46	46	46	46	46	92	92	92	92	92	46	46	46	46	46	4
5	46	46	46	46	46	46	46	46	46	46	46	46	46	46	46	92	92	92	92	92	46	46	46	46	46	5
ID	49	49	49	49	49	50	50	50	50	50	42	42	42	42	42	21	21	21	21	21	38	38	38	38	38	ID
[DEG]	47~83	49~85	47~85	60~85	74~85	57~83	56~85	56~85	57~85	76~85	60~83	60~85	60~85	61~85	75~85	53~83	55~85	55~85	59~85	75~85	63~83	63~85	63~85	64~85	75~85	[DEG]
	1	1	1	1	1	1	1	1	1	1	1	1	1	1	1	1	1	1	1	1	1	1	1	1	1	
	8.7t	8.7t	8.7t	8.7t	8.7t	8.7t	8.7t	8.7t	8.7t	8.7t	8.7t	8.7t	8.7t	8.7t	8.7t	8.7t	8.7t	8.7t	8.7t	8.7t	8.7t	8.7t	8.7t	8.7t	8.7t	

フルオートラフィングジブ

FLJ	1.6m + 12.4m	7.1 t	8.0m x 7.5m	360 °	JPN

m	47.4	47.4	47.4	47.4	47.4	51.7	51.7	51.7	51.7	51.7	51.7	51.7	51.7	51.7	51.7	56.0	56.0	56.0	56.0	56.0	60.0	60.0	60.0	60.0	60.0	m
°	5	15	30	45	60	5	15	30	45	60	5	15	30	45	60	5	15	30	45	60	5	15	30	45	60	°
3.0																										3.0
3.5																										3.5
4.0																										4.0
4.5																										4.5
5.0																										5.0
6.0																										6.0
7.0																										7.0
8.0																										8.0
9.0																										9.0
10.0	4.3																									10.0
11.0	4.3	4.3				4.3					4.3															11.0
12.0	4.3	4.3				4.3	4.3				4.3	4.3				4.3										12.0
14.0	4.3	4.3	4.1			4.3	4.3				4.3	4.3				4.3	4.3				3.3	3.3				14.0
16.0	4.3	4.3	4.0	3.3		4.3	4.3	3.9			4.3	4.3	3.9			4.3	4.3	3.8			3.3	3.3				16.0
18.0	4.3	4.3	3.8	3.2	2.4	4.3	4.3	3.8	3.2	2.4	4.3	4.3	3.7	3.2	2.4	4.3	4.3	3.7	3.2		3.3	3.3	3.3			18.0
20.0	4.3	4.3	3.7	3.1	2.3	4.3	4.3	3.7	3.1	2.3	4.3	4.3	3.6	3.1	2.3	4.3	4.3	3.6	3.1	2.3	3.3	3.3	3.3	3.1	2.3	20.0
22.0	4.3	4.3	3.5	3.0	2.3	4.3	4.3	3.5	3.0	2.3	4.3	4.2	3.5	3.0	2.3	4.3	4.2	3.5	3.1	2.3	3.3	3.3	3.3	3.0	2.3	22.0
24.0	4.0	4.1	3.4	2.9		3.4	4.1	3.4	2.9		4.2	4.0	3.4	2.9		3.7	4.0	3.4	3.0	2.3	3.3	3.3	3.3	3.0	2.3	24.0
26.0	2.8	3.3	3.3	2.8		2.3	2.8	3.3	2.9		3.1	3.6	3.2	2.9		2.5	3.1	3.2	2.9		2.4	3.0	3.2	2.9		26.0
28.0	1.9	2.4	2.9	2.8		1.4	1.9	2.5	2.8		2.1	2.6	3.2	2.8		1.6	2.1	2.7	2.9		1.5	2.0	2.7	2.8		28.0
30.0	1.2	1.6	2.1	2.4			1.1	1.7	2.1		1.4	1.8	2.3	2.7		0.9	1.3	1.9	2.3			1.3	1.8	2.2		30.0
32.0		0.9	1.4	1.7				0.9	1.3		0.8	1.1	1.6	1.9				1.2	1.5				1.1	1.5		32.0
34.0			0.8	1.0									1.0	1.2					0.9							34.0
36.0																										36.0
38.0																										38.0
40.0																										40.0
44.0																										44.0
48.0																										48.0
52.0																										52.0
56.0																										56.0
60.0																										60.0
64.0																										64.0
68.0																										68.0
72.0																										72.0
1	46	46	46	46	46	92	92	92	92	92	46	46	46	46	46	92	92	92	92	92	100	100	100	100	100	1
2	92	92	92	92	92	92	92	92	92	92	92	92	92	92	92	92	92	92	92	92	100	100	100	100	100	2
3	92	92	92	92	92	92	92	92	92	92	92	92	92	92	92	92	92	92	92	92	100	100	100	100	100	3
4	92	92	92	92	92	92	92	92	92	92	92	92	92	92	92	92	92	92	92	92	100	100	100	100	100	4
5	46	46	46	46	46	46	46	46	46	46	92	92	92	92	92	92	92	92	92	92	100	100	100	100	100	5
ID	31	31	31	31	31	32	32	32	32	32	23	23	23	23	23	24	24	24	24	24	16	16	16	16	16	ID
[DEG]	61~83	61~85	60~85	62~85	75~85	66~83	65~85	65~85	67~85	74~85	62~83	63~85	63~85	65~85	74~85	66~83	68~85	68~85	67~85	74~85	70~83	70~85	70~85	71~85	74~85	[DEG]
	1	1	1	1	1	1	1	1	1	1	1	1	1	1	1	1	1	1	1	1	1	1	1	1	1	
	8.7t	8.7t	8.7t	8.7t	8.7t	8.7t	8.7t	8.7t	8.7t	8.7t	8.7t	8.7t	8.7t	8.7t	8.7t	8.7t	8.7t	8.7t	8.7t	8.7t	8.7t	8.7t	8.7t	8.7t	8.7t	

FLJ	1.6m + 17.4m	7.1 t	8.0m x 7.5m	360 °	JPN

m	12.8	12.8	12.8	12.8	12.8	25.8	25.8	25.8	25.8	25.8	30.1	30.1	30.1	30.1	30.1	30.1	30.1	30.1	30.1	30.1	34.4	34.4	34.4	34.4	34.4	m
°	5	15	30	45	60	5	15	30	45	60	5	15	30	45	60	5	15	30	45	60	5	15	30	45	60	°
3.0																										3.0
3.5																										3.5
4.0																										4.0
4.5																										4.5
5.0	3.3																									5.0
6.0	3.3																									6.0
7.0	3.3																									7.0
8.0	3.3	3.3				3.3					3.3					3.3										8.0
9.0	3.3	3.3				3.3	3.3				3.3					3.3					3.3					9.0
10.0	3.3	3.3				3.3	3.3				3.3	3.3				3.3	3.3				3.3					10.0
11.0	3.3	3.3				3.3	3.3				3.3	3.3				3.3	3.3				3.3	3.3				11.0
12.0	3.3	3.2	2.6			3.3	3.3				3.3	3.3				3.3	3.3				3.3	3.3				12.0
14.0	3.3	2.9	2.4			3.3	3.2	2.6			3.3	3.3	2.7			3.3	3.2	2.6			3.3	3.3				14.0
16.0	2.9	2.6	2.2	1.8		3.3	3.0	2.5			3.3	3.1	2.5			3.3	3.0	2.5			3.3	3.1	2.5			16.0
18.0	2.5	2.3	2.0	1.7		3.3	2.8	2.3	1.9		3.3	2.9	2.4	1.9		3.3	2.9	2.4	1.9		3.3	2.9	2.4	1.9		18.0
20.0	2.3	2.1	1.8	1.6		3.1	2.6	2.2	1.8		3.2	2.7	2.2	1.8	1.5	3.2	2.7	2.2	1.8	1.5	3.3	2.8	2.3	1.8	1.5	20.0
22.0	2.0	1.9	1.7			2.9	2.5	2.0	1.7		3.0	2.6	2.1	1.7	1.5	3.0	2.6	2.1	1.7	1.5	3.1	2.6	2.2	1.8	1.5	22.0
24.0	1.8	1.8	1.6			2.7	2.4	1.9	1.6		2.8	2.5	2.0	1.7		2.8	2.4	2.0	1.7		2.9	2.5	2.1	1.7		24.0
26.0	1.7	1.6				2.5	2.2	1.8	1.6		2.7	2.3	1.9	1.6		2.6	2.3	1.9	1.6		2.7	2.4	2.0	1.6		26.0
28.0	1.5					2.3	2.1	1.7	1.5		1.9	2.2	1.8	1.6		2.5	2.2	1.8	1.6		2.0	2.3	1.9	1.6		28.0
30.0						1.9	1.9	1.7			1.2	1.7	1.7	1.5		2.0	2.1	1.7	1.5		1.3	1.8	1.8	1.5		30.0
32.0						1.3	1.6	1.6				1.0	1.6			1.3	1.7	1.7				1.2	1.7	1.5		32.0
34.0							1.0						0.9			0.8	1.1	1.6					1.1			34.0
36.0																		1.0								36.0
38.0																										38.0
40.0																										40.0
44.0																										44.0
48.0																										48.0
52.0																										52.0
56.0																										56.0
60.0																										60.0
64.0																										64.0
68.0																										68.0
72.0																										72.0
1	0	0	0	0		46	46	46	46		92	92	92	92	92	46	46	46	46	46	92	92	92	92	92	1
2	0	0	0	0		46	46	46	46		46	46	46	46	46	46	46	46	46	46	46	46	46	46	46	2
3	0	0	0	0		46	46	46	46		46	46	46	46	46	46	46	46	46	46	46	46	46	46	46	3
4	0	0	0	0		0	0	0	0		0	0	0	0	0	46	46	46	46	46	46	46	46	46	46	4
5	0	0	0	0		0	0	0	0		0	0	0	0	0	0	0	0	0	0	0	0	0	0	0	5
ID	1	1	1	1		66	66	66	66		67	67	67	67	67	54	54	54	54	54	55	55	55	55	55	ID
[DEG]	0~83	0~85	0~85	0~85		42~83	41~85	44~85	60~85		51~83	51~85	51~85	57~85	73~85	44~83	47~85	47~85	57~85	73~85	55~83	55~85	56~85	58~85	75~85	[DEG]
	1	1	1	1		1	1	1	1		1	1	1	1	1	1	1	1	1	1	1	1	1	1	1	
	8.7t	8.7t	8.7t	8.7t		8.7t	8.7t	8.7t	8.7t		8.7t	8.7t	8.7t	8.7t	8.7t	8.7t	8.7t	8.7t	8.7t	8.7t	8.7t	8.7t	8.7t	8.7t	8.7t	

FLJ	1.6m + 17.4m	7.1 t	8.0m x 7.5m	360 °	JPN

m	34.4	34.4	34.4	34.4	34.4	38.7	38.7	38.7	38.7	38.7	43.0	43.0	43.0	43.0	43.0	43.0	43.0	43.0	43.0	43.0	47.4	47.4	47.4	47.4	47.4	m
°	5	15	30	45	60	5	15	30	45	60	5	15	30	45	60	5	15	30	45	60	5	15	30	45	60	°
3.0																										3.0
3.5																										3.5
4.0																										4.0
4.5																										4.5
5.0																										5.0
6.0																										6.0
7.0																										7.0
8.0																										8.0
9.0	3.3																									9.0
10.0	3.3					3.3																				10.0
11.0	3.3	3.3				3.3					3.3					2.9										11.0
12.0	3.3	3.3				3.3	3.3				3.3	3.3				2.9					3.2					12.0
14.0	3.3	3.2				3.3	3.3				3.3	3.2				2.9	2.9				3.2	3.2				14.0
16.0	3.3	3.0	2.5			3.3	3.1	2.5			3.3	3.1				2.9	2.9				3.2	3.1				16.0
18.0	3.3	2.9	2.4	1.9		3.3	2.9	2.4			3.3	2.9	2.4			2.9	2.8	2.3			3.2	2.9	2.4			18.0
20.0	3.2	2.7	2.3	1.8	1.5	3.3	2.8	2.3	1.9		3.3	2.8	2.3	1.9		2.9	2.7	2.2	1.9		3.2	2.8	2.3			20.0
22.0	3.0	2.6	2.2	1.8	1.5	3.1	2.6	2.2	1.8	1.5	3.1	2.7	2.2	1.8	1.5	2.9	2.6	2.2	1.8	1.5	3.1	2.7	2.2	1.8		22.0
24.0	2.9	2.5	2.1	1.7		2.9	2.5	2.1	1.7	1.5	3.0	2.5	2.1	1.8	1.5	2.9	2.5	2.1	1.8	1.5	3.0	2.5	2.1	1.8	1.5	24.0
26.0	2.7	2.4	2.0	1.6		2.8	2.4	2.1	1.7		2.8	2.4	2.1	1.7		2.7	2.4	2.0	1.7		2.9	2.4	2.1	1.7	1.4	26.0
28.0	2.6	2.3	1.9	1.6		2.3	2.3	2.0	1.6		2.1	2.3	2.0	1.6		2.6	2.3	2.0	1.6		2.0	2.4	2.0	1.7		28.0
30.0	2.2	2.2	1.8	1.5		1.5	2.1	1.9	1.6		1.3	1.9	1.9	1.6		2.5	2.2	1.9	1.6		1.3	1.9	1.9	1.6		30.0
32.0	1.5	2.0	1.7	1.5		0.9	1.4	1.8	1.5			1.2	1.9	1.6		2.1	2.1	1.8	1.6			1.2	1.9	1.6		32.0
34.0	1.0	1.4	1.7				0.8	1.4	1.5				1.2	1.5		1.6	1.9	1.8	1.5				1.2	1.6		34.0
36.0		0.9	1.2					0.8						1.0		1.1	1.4	1.7	1.5					1.1		36.0
38.0																	1.0	1.3								38.0
40.0																		0.9								40.0
44.0																										44.0
48.0																										48.0
52.0																										52.0
56.0																										56.0
60.0																										60.0
64.0																										64.0
68.0																										68.0
72.0																										72.0
1	46	46	46	46	46	92	92	92	92	92	92	92	92	92	92	0	0	0	0	0	92	92	92	92	92	1
2	46	46	46	46	46	46	46	46	46	46	92	92	92	92	92	46	46	46	46	46	92	92	92	92	92	2
3	46	46	46	46	46	46	46	46	46	46	46	46	46	46	46	92	92	92	92	92	92	92	92	92	92	3
4	46	46	46	46	46	46	46	46	46	46	46	46	46	46	46	92	92	92	92	92	46	46	46	46	46	4
5	46	46	46	46	46	46	46	46	46	46	46	46	46	46	46	92	92	92	92	92	46	46	46	46	46	5
ID	49	49	49	49	49	50	50	50	50	50	42	42	42	42	42	21	21	21	21	21	38	38	38	38	38	ID
[DEG]	50~83	49~85	53~85	58~85	75~85	56~83	56~85	57~85	59~85	74~85	62~83	62~85	63~85	62~85	74~85	55~83	55~85	56~85	57~85	74~85	64~83	65~85	66~85	65~85	73~85	[DEG]
	1	1	1	1	1	1	1	1	1	1	1	1	1	1	1	1	1	1	1	1	1	1	1	1	1	
	8.7t	8.7t	8.7t	8.7t	8.7t	8.7t	8.7t	8.7t	8.7t	8.7t	8.7t	8.7t	8.7t	8.7t	8.7t	8.7t	8.7t	8.7t	8.7t	8.7t	8.7t	8.7t	8.7t	8.7t	8.7t	

m	47.4	47.4	47.4	47.4	47.4	51.7	51.7	51.7	51.7	51.7	51.7	51.7	51.7	51.7	51.7	56.0	56.0	56.0	56.0	56.0	60.0	60.0	60.0	60.0	60.0	m
°	5	15	30	45	60	5	15	30	45	60	5	15	30	45	60	5	15	30	45	60	5	15	30	45	60	°
3.0																										3.0
3.5																										3.5
4.0																										4.0
4.5																										4.5
5.0																										5.0
6.0																										6.0
7.0																										7.0
8.0																										8.0
9.0																										9.0
10.0																										10.0
11.0																										11.0
12.0	3.1																									12.0
14.0	3.1	3.1				3.2	3.1				3.2	3.0				2.9										14.0
16.0	3.1	3.0				3.2	3.0				3.1	2.9				2.9	2.9				2.8	2.7				16.0
18.0	3.1	2.9	2.4			3.2	2.9				3.1	2.8				2.9	2.8				2.8	2.6				18.0
20.0	3.1	2.7	2.3			3.1	2.7	2.3			3.0	2.7	2.2			2.9	2.7	2.2			2.8	2.6				20.0
22.0	3.1	2.6	2.2	1.8		3.1	2.6	2.2	1.8		2.9	2.6	2.2	1.8		2.9	2.6	2.2			2.7	2.5	2.1			22.0
24.0	2.9	2.5	2.1	1.8	1.5	2.9	2.5	2.1	1.8	1.5	2.9	2.5	2.1	1.8	1.5	2.8	2.5	2.1	1.8		2.7	2.5	2.1	1.8		24.0
26.0	2.8	2.4	2.0	1.7	1.4	2.8	2.4	2.1	1.7	1.4	2.8	2.4	2.0	1.7	1.4	2.8	2.4	2.0	1.8	1.4	2.6	2.4	2.0	1.8	1.4	26.0
28.0	2.6	2.3	2.0	1.7		2.1	2.3	2.0	1.7	1.4	2.7	2.3	2.0	1.7	1.4	2.3	2.3	2.0	1.7	1.4	2.2	2.3	2.0	1.7	1.4	28.0
30.0	1.9	2.2	1.9	1.6		1.3	1.9	1.9	1.6		2.0	2.2	1.9	1.6		1.5	2.1	1.9	1.7		1.4	2.0	1.9	1.7	1.4	30.0
32.0	1.2	1.7	1.9	1.6			1.3	1.9	1.6		1.4	1.9	1.9	1.6		0.9	1.4	1.9	1.6			1.3	1.8	1.6		32.0
34.0		1.1	1.7	1.6				1.3	1.6		0.8	1.3	1.8	1.6			0.8	1.5	1.6				1.4	1.6		34.0
36.0			1.1	1.5				0.8	1.2			0.8	1.3	1.5				0.9	1.3					1.3		36.0
38.0				1.0									0.8	1.1					0.8							38.0
40.0																										40.0
44.0																										44.0
48.0																										48.0
52.0																										52.0
56.0																										56.0
60.0																										60.0
64.0																										64.0
68.0																										68.0
72.0																										72.0
1	46	46	46	46	46	92	92	92	92	92	46	46	46	46	46	92	92	92	92	92	100	100	100	100	100	1
2	92	92	92	92	92	92	92	92	92	92	92	92	92	92	92	92	92	92	92	92	100	100	100	100	100	2
3	92	92	92	92	92	92	92	92	92	92	92	92	92	92	92	92	92	92	92	92	100	100	100	100	100	3
4	92	92	92	92	92	92	92	92	92	92	92	92	92	92	92	92	92	92	92	92	100	100	100	100	100	4
5	46	46	46	46	46	46	46	46	46	46	92	92	92	92	92	92	92	92	92	92	100	100	100	100	100	5
ID	31	31	31	31	31	32	32	32	32	32	23	23	23	23	23	24	24	24	24	24	16	16	16	16	16	ID
[DEG]	62~83	63~85	63~85	63~85	73~85	67~83	67~85	66~85	68~85	73~85	63~83	63~85	64~85	66~85	73~85	67~83	67~85	68~85	68~85	73~85	70~83	71~85	72~85	72~85	73~85	[DEG]
	1	1	1	1	1	1	1	1	1	1	1	1	1	1	1	1	1	1	1	1	1	1	1	1	1	
	8.7t	8.7t	8.7t	8.7t	8.7t	8.7t	8.7t	8.7t	8.7t	8.7t	8.7t	8.7t	8.7t	8.7t	8.7t	8.7t	8.7t	8.7t	8.7t	8.7t	8.7t	8.7t	8.7t	8.7t	8.7t	

オールテレーンクレーン
ATF-140N-5.1
油圧チルトジブ

■ 油圧チルトジブ(HLJ)の構成

記　号	名　　称	長　さ
①	ベースジブ	1.0 m+2.8 m
②	ミドルAジブ	6.4 m
③	トップジブ	7.8 m
④	ミドルBジブ	7.0 m

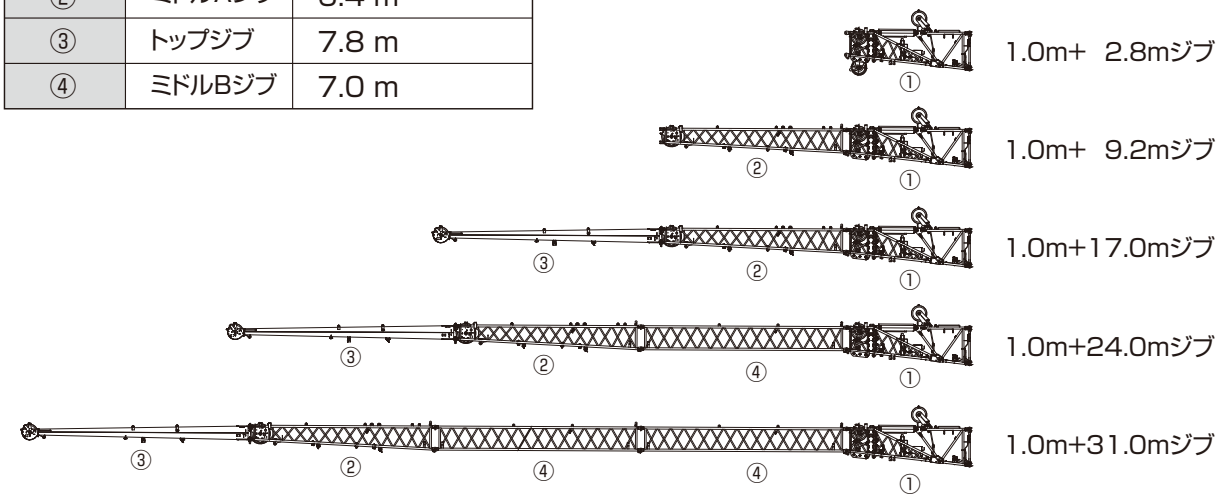

ブーム+油圧チルトジブ(HLJ)作業半径ー揚程図

12.8mブーム+油圧チルトジブ

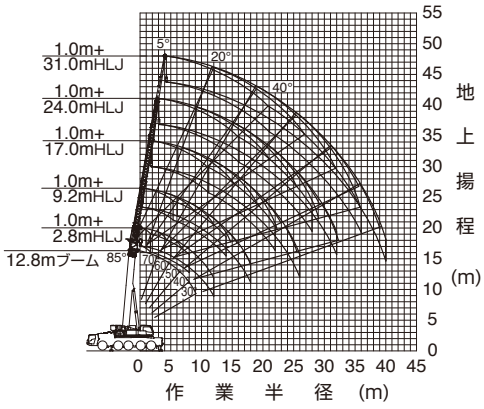

（注意） 1. 上図はブームおよびジブのたわみを含んでいません。
2. カウンタウエイト40.9ｔ、アウトリガ張出幅7.5m時の性能を図示しています。

25.8mブーム+油圧チルトジブ

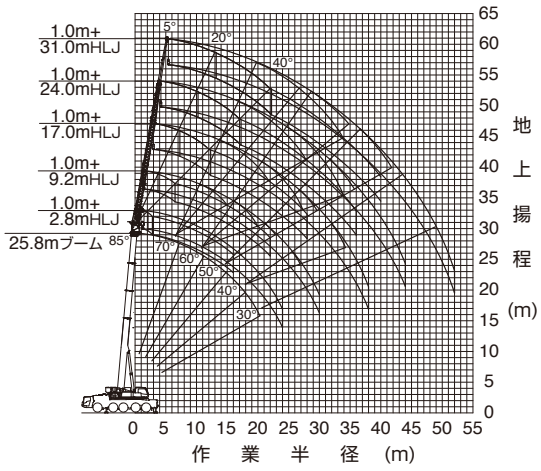

（注意） 1. 上図はブームおよびジブのたわみを含んでいません。
2. カウンタウエイト40.9ｔ、アウトリガ張出幅7.5m時の性能を図示しています。

油圧チルトジブ

ブーム＋油圧チルトジブ(HLJ)作業半径－揚程図

30.1mブーム+油圧チルトジブ

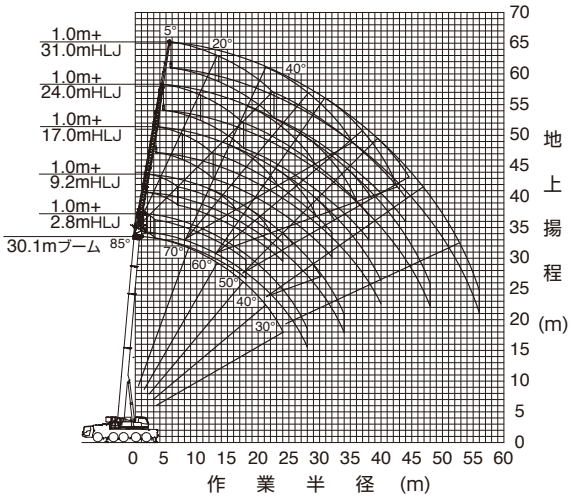

（注意） 1. 上図はブームおよびジブのたわみを含んでいません。
2. カウンタウエイト40.9ｔ、アウトリガ張出幅7.5m時の性能を図示しています。

34.4mブーム+油圧チルトジブ

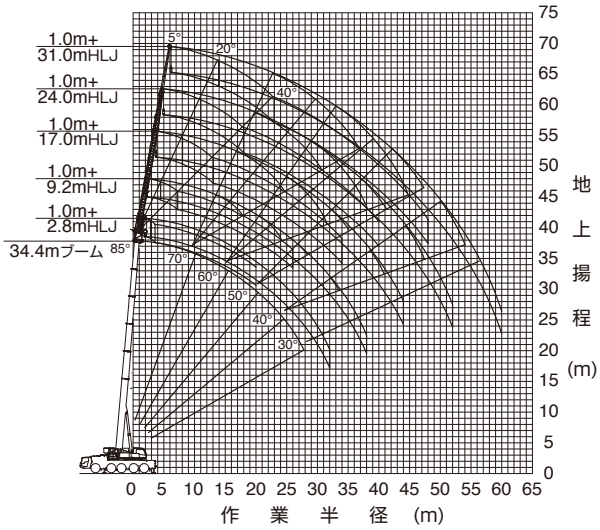

（注意） 1. 上図はブームおよびジブのたわみを含んでいません。
2. カウンタウエイト40.9ｔ、アウトリガ張出幅7.5m時の性能を図示しています。

43.0mブーム+油圧チルトジブ

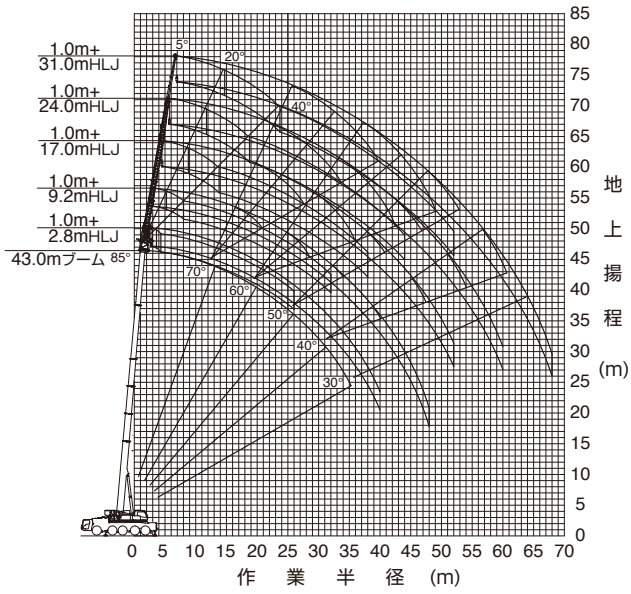

（注意） 1. 上図はブームおよびジブのたわみを含んでいません。
2. カウンタウエイト40.9ｔ、アウトリガ張出幅7.5m時の性能を図示しています。

47.4mブーム+油圧チルトジブ

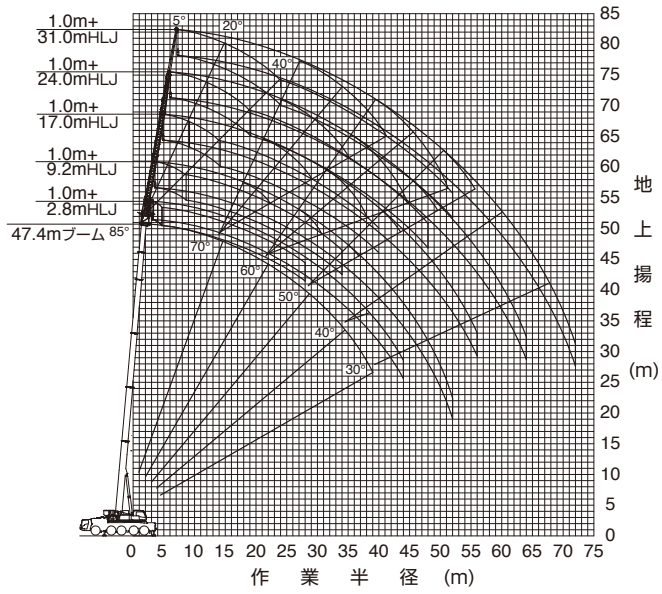

（注意） 1. 上図はブームおよびジブのたわみを含んでいません。
2. カウンタウエイト40.9ｔ、アウトリガ張出幅7.5m時の性能を図示しています。

51.7mブーム+油圧チルトジブ

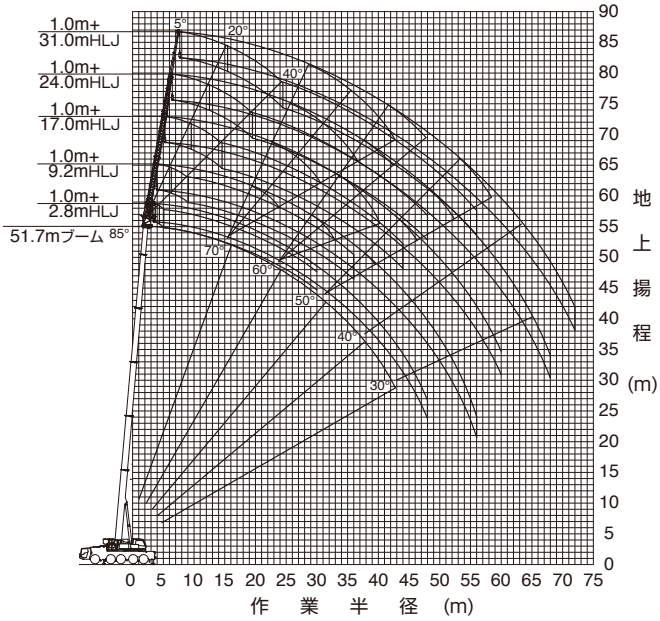

（注意） 1. 上図はブームおよびジブのたわみを含んでいません。
2. カウンタウエイト40.9ｔ、アウトリガ張出幅7.5m時の性能を図示しています。

56.0mブーム+油圧チルトジブ

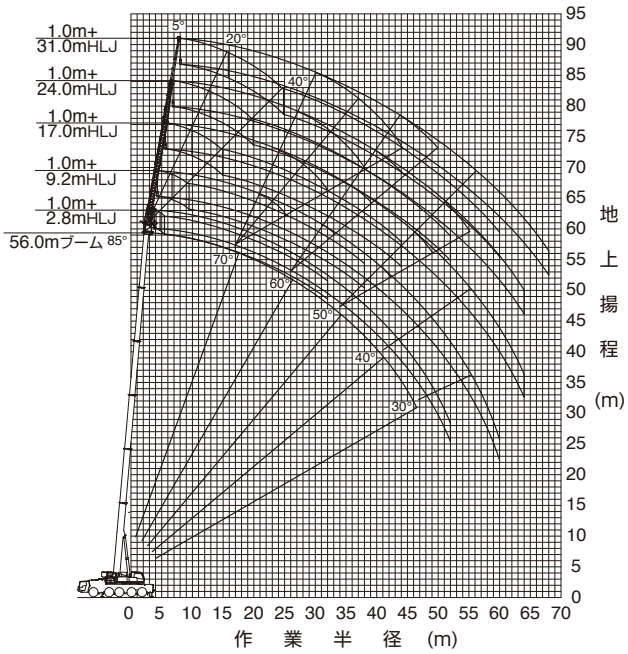

（注意） 1. 上図はブームおよびジブのたわみを含んでいません。
2. カウンタウエイト40.9ｔ、アウトリガ張出幅7.5m時の性能を図示しています。

60.0mブーム+油圧チルトジブ

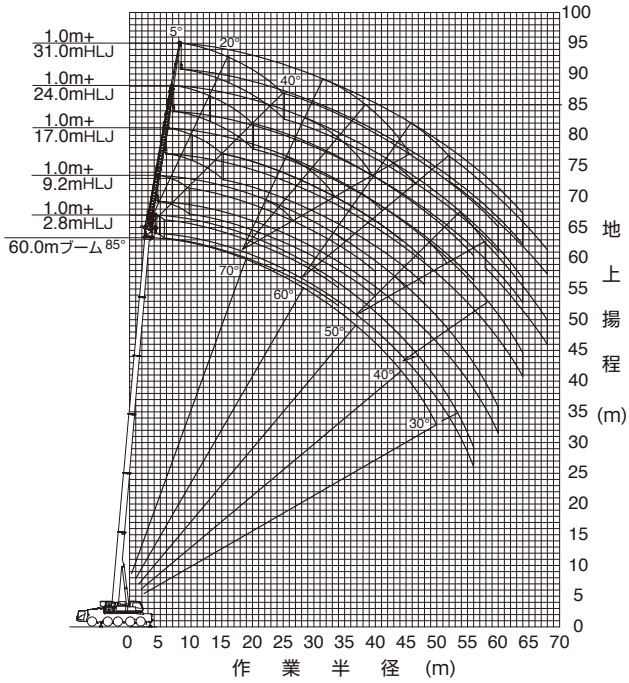

（注意） 1. 上図はブームおよびジブのたわみを含んでいません。
2. カウンタウエイト40.9ｔ、アウトリガ張出幅7.5m時の性能を図示しています。

ブーム＋油圧チルトジブ(HLJ)定格総荷重表

■ 定格総荷重表注意事項

◆性能設定のあるカウンタウエイトとアウトリガ張出幅の組合せを、下表に○印で示します。

アウトリガ張出幅＼カウンタウエイト	40.9 t	28.9 t	25.4 t	15.4 t	7.1 t	0 t
7.5 m	○	○	○	○	○	○
6.2 m	○	○	○	○	○	○
5.0 m		○	○	○	○	
4.1 m				○		

※同じブーム長さでも、ブームの伸長状態によって定格総荷重が異なります。

◆B ピン（ブーム固定ピン）を挿入していないときの定格総荷重は 20.0tに制限されます。

◆定格総荷重は、つり具質量とフック質量（60tフック: 600kg、26tフック: 450kg、8.7tフック:300kg）を含んだ値を示します。

◆定格総荷重は、ブームとジブのたわみを含んだ実際の作業半径に基づいています。

◆定格総荷重表中の標準巻掛本数より少ない本数で使用する場合、最大荷重の上限は下表のとおりです。

巻掛本数	5本	4本	3本	2本	1本
最大荷重	42.3t	33.9t	25.5t	17.1t	8.7t

◆定格総荷重はアウトリガを水平堅土上に設置したときの値で、太線より上側はクレーンの強度に基づき、下側はクレーンの安定に基づいています。

◆定格総荷重表は、風による影響を含んでいません。瞬間最大風速が10m／s以上の風速では、クレーン作業を中止してください。

定格総荷重表中のシンボル、記号の説明

MB	ブームの定格総荷重を示します。	m	ブーム長さを示します。
HLJ	油圧チルトジブ (HLJ) の定格総荷重を示します。		ジブのオフセット角度を示し、ブームの中心線とジブの中心線のなす角度を示します。
	油圧チルトジブ (HLJ) のジブ長さを示します。	m	作業半径を示します。
	カウンタウエイト（C/W）組合せを示します。	%	ブーム伸縮状態 (伸縮割合 %) を示します。 IDはブーム伸縮状態に対応する番号を示します。
	アウトリガ張出幅を示します。		無負荷状態で作動可能なブーム起伏角度範囲を示します。
360 °	吊上げ可能な旋回範囲を示します。		標準巻掛本数を示します。
t JPN	定格総荷重の単位を示します。		標準フックを示します。

■ 定格総荷重表の見方

1. アウトリガ張出幅とカウンタウエイトの質量とジブ長さに応じた性能を選択します。
2. ブーム長さとIDとオフセット角度の欄を見ます。
3. 作業半径を見ます。
4. オフセット角度と作業半径が交差するところが定格総荷重です。

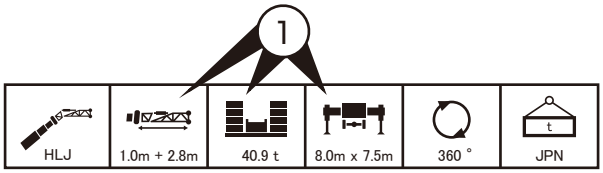

m	12.8	12.8	12.8	25.8	25.8	25.8	25.8	25.8	25.8	30.1	30.1	30.1	30.1	30.1	30.1	34.4	34.4	34.4	34.4	34.4	34.4	34.4	34.4	34.4	m
°	5	20	40	5	20	40	5	20	40	5	20	40	5	20	40	5	20	40	5	20	40	5	20	40	°
3.0		31.6	25.3																						3.0
3.5	38.1	30.3	24.6		31.4			25.0																	3.5
4.0	36.1	29.1	23.9		30.6	23.4		24.2						31.2											4.0
4.5	34.3	28.0	23.3		29.8	23.1		23.3	21.5		30.2			30.4											4.5
5.0	32.7	27.0	22.8		29.0	22.7		22.4	20.6		29.5	22.8		29.8	22.9		29.9			24.9			16.9		5.0
6.0	29.9	25.3	21.8		27.7	22.0		20.5	19.0		28.3	22.2		28.5	22.3		28.9	22.5		24.9	23.0		16.9	16.9	6.0
7.0	27.7	23.8	20.9		26.5	21.3		18.9	17.7		27.1	21.6		27.4	21.7		27.9	22.0		24.9	22.4		16.9	16.9	7.0
8.0	25.7	22.6	20.2	32.0	25.4	20.8	18.6	17.5	16.5		26.1	21.1		26.3	21.2		26.9	21.5		24.3	21.9		16.9	16.7	8.0
9.0	24.1	21.5		30.3	24.4	20.2	17.3	16.3	15.5	32.0	25.2	20.6	32.2	25.4	20.7		26.0	21.0		23.1	20.9		16.2	15.9	9.0
10.0	22.7	20.6		28.7	23.5	19.7	16.1	15.3	14.6	30.1	24.3	20.2	30.7	24.5	20.2		25.2	20.6	24.4	22.1	20.1		15.3	14.9	10.0
11.0	21.5	19.9		27.4	22.7	19.3	15.1	14.4	13.7	28.0	23.[illegible]	19.8	29.4	23.7	19.8	26.1	24.4	20.2	23.2	21.1	19.3	14.8	14.4	14.0	11.0
12.0	20.6	19.3		26.2	21.9	18.9	14.2	13.6	13.0	26.1		19.4	28.1	23.0	19.4	24.4	23.7	19.8	22.1	20.2	18.6	13.9	13.5	13.2	12.0
14.0				24.0	20.6	18.2	12.6	12.2	11.8	23.0		18.7	25.9	21.7	18.7	21.5	21.2	19.1	20.3	18.7	17.4	12.3	12.1	11.8	14.0
16.0				22.3	19.5	17.7	11.4	11.1	10.8	20.5		18.1	23.6	20.6	18.2	19.2	18.9	18.6	18.7	17.4	16.3	11.1	10.9	10.6	16.0
18.0				19.2	18.7		10.3	10.0		18.5		17.7	19.6	19.6	17.7	17.2	17.1	16.9	17.4	16.3	15.4	9.9	9.8	9.7	18.0
20.0				16.2	16.3		9.3	9.2		15.7	15.8		16.6	16.7		15.6	15.5	15.4	16.3	15.3	14.6	8.9	8.8	8.8	20.0
22.0				13.8	13.9		8.5	8.4		13.3	13.4		14.2	14.3		13.7	13.9		14.8	14.5		8.1	8.0		22.0
24.0				11.9			7.9			11.4	11.5		12.3	12.4		11.8	11.9		12.9	13.0		7.4	7.3		24.0
26.0										9.8	9.9		10.7	10.8		10.2	10.3		11.3	11.4		6.8	6.7		26.0
28.0										8.5			9.4			8.9	9.0		9.9	10.0		6.2	6.2		28.0
30.0																7.8			8.8			5.8			30.0
32.0																6.8			7.8			5.4			32.0
34.0																									34.0
36.0																									36.0
38.0																									38.0
40.0																									40.0
44.0																									44.0
48.0																									48.0
52.0																									52.0
56.0																									56.0
60.0																									60.0
64.0																									64.0
68.0																									68.0
72.0																									72.0
1	0	0	0	46	46	46	0	0	0	92	92	92	46	46	46	92	92	92	46	46	46	0	0	0	1
2	0	0	0	46	46	46	0	0	0	46	46	46	46	46	46	46	46	46	46	46	46	0	0	0	2
3	0	0	0	46	46	46	0	0	0	46	46	46	46	46	46	46	46	46	46	46	46	46	46	46	3
4	0	0	0	0	0	0	46	46	46	0	0	0	46	46	46	46	46	46	46	46	46	92	92	92	4
5	0	0	0	0	0	0	92	92	92	0	0	0	0	0	0	0	0	0	46	46	46	92	92	92	5
ID	1	1	1	66	66	66	17	17	17	67	67	67	54	54	54	55	55	55	49	49	49	19	19	19	ID
[DEG]	0~76	34~85	58~85	28~76	38~85	56~85	28~76	38~85	57~85	28~76	37~85	58~85	28~76	36~85	58~85	28~76	41~85	59~85	28~76	41~85	59~85	28~76	41~85	59~85	[DEG]
	5	5	5	4	4	4	3	3	3	4		4	4	4	4	4	4	4	3	3	3	2	2	2	
	60t	60t	60t	60t	60t	60t	26t	26t	26t	60t		60t	60t	60t	60t	60t	60t	60t	26t	26t	26t	26t	26t	26t	

油圧チルトジブ

HLJ	1.0m + 2.8m	40.9 t	8.0m x 7.5m	360 °	JPN

m	12.8	12.8	12.8	25.8	25.8	25.8	25.8	25.8	25.8	30.1	30.1	30.1	30.1	30.1	30.1	34.4	34.4	34.4	34.4	34.4	34.4	34.4	34.4	34.4	m
°	5	20	40	5	20	40	5	20	40	5	20	40	5	20	40	5	20	40	5	20	40	5	20	40	°
3.0		31.6	25.3																						3.0
3.5	38.1	30.3	24.6		31.4			25.0																	3.5
4.0	36.1	29.1	23.9		30.6	23.4		24.2						31.2											4.0
4.5	34.3	28.0	23.3		29.8	23.1		23.3	21.5		30.2			30.4											4.5
5.0	32.7	27.0	22.8		29.0	22.7		22.4	20.6		29.5	22.8		29.8	22.9		29.9			24.9			16.9		5.0
6.0	29.9	25.3	21.8		27.7	22.0		20.5	19.0		28.3	22.2		28.5	22.3		28.9	22.5		24.9	23.0		16.9	16.9	6.0
7.0	27.7	23.8	20.9		26.5	21.3		18.9	17.7		27.1	21.6		27.4	21.7		27.9	22.0		24.9	22.4		16.9	16.9	7.0
8.0	25.7	22.6	20.2	32.0	25.4	20.8	18.6	17.5	16.5		26.1	21.1		26.3	21.2		26.9	21.5		24.3	21.9		16.9	16.7	8.0
9.0	24.1	21.5		30.3	24.4	20.2	17.3	16.3	15.5	32.0	25.2	20.6	32.2	25.4	20.7		26.0	21.0		23.1	20.9		16.2	15.9	9.0
10.0	22.7	20.6		28.7	23.5	19.7	16.1	15.3	14.6	30.1	24.3	20.2	30.7	24.5	20.2		25.2	20.6	24.4	22.1	20.1		15.3	14.9	10.0
11.0	21.5	19.9		27.4	22.7	19.3	15.1	14.4	13.7	28.0	23.6	19.8	29.4	23.7	19.8	26.1	24.4	20.2	23.2	21.1	19.3	14.8	14.4	14.0	11.0
12.0	20.6	19.3		26.2	21.9	18.9	14.2	13.6	13.0	26.1	22.8	19.4	28.1	23.0	19.4	24.4	23.7	19.8	22.1	20.2	18.6	13.9	13.5	13.2	12.0
14.0				24.0	20.6	18.2	12.6	12.2	11.8	23.0	21.6	18.7	25.9	21.7	18.7	21.5	21.2	19.1	20.3	18.7	17.4	12.3	12.1	11.8	14.0
16.0				22.3	19.5	17.7	11.4	11.1	10.8	20.5	20.3	18.1	23.6	20.6	18.2	19.2	18.9	18.6	18.7	17.4	16.3	11.1	10.9	10.6	16.0
18.0				19.2	18.7		10.3	10.0		18.5	18.3	17.7	19.6	19.6	17.7	17.2	17.1	16.9	17.4	16.3	15.4	9.9	9.8	9.7	18.0
20.0				16.2	16.3		9.3	9.2		15.7	15.8		16.6	16.7		15.6	15.5	15.4	16.3	15.3	14.6	8.9	8.8	8.8	20.0
22.0				13.8	13.9		8.5	8.4		13.3	13.4		14.2	14.3		13.7	13.9		14.8	14.5		8.1	8.0		22.0
24.0				11.9			7.9			11.4	11.5		12.3	12.4		11.8	11.9		12.9	13.0		7.4	7.3		24.0
26.0										9.8	9.9		10.7	10.8		10.2	10.3		11.3	11.4		6.8	6.7		26.0
28.0										8.5			9.4			8.9	9.0		9.9	10.0		6.2	6.2		28.0
30.0																7.8			8.8			5.8			30.0
32.0																6.8			7.8			5.4			32.0
34.0																									34.0
36.0																									36.0
38.0																									38.0
40.0																									40.0
44.0																									44.0
48.0																									48.0
52.0																									52.0
56.0																									56.0
60.0																									60.0
64.0																									64.0
68.0																									68.0
72.0																									72.0
1	0	0	0	46	46	46	0	0	0	92	92	92	46	46	46	92	92	92	46	46	46	0	0	0	1
2	0	0	0	46	46	46	0	0	0	46	46	46	46	46	46	46	46	46	46	46	46	0	0	0	2
3	0	0	0	46	46	46	0	0	0	46	46	46	46	46	46	46	46	46	46	46	46	46	46	46	3
4	0	0	0	0	0	0	46	46	46	0	0	0	46	46	46	46	46	46	46	46	46	92	92	92	4
5	0	0	0	0	0	0	92	92	92	0	0	0	0	0	0	0	0	0	46	46	46	92	92	92	5
ID	1	1	1	66	66	66	17	17	17	67	67	67	54	54	54	55	55	55	49	49	49	19	19	19	ID
[DEG]	0~76	34~85	58~85	28~76	38~85	56~85	28~76	38~85	57~85	28~76	37~85	58~85	28~76	36~85	58~85	28~76	41~85	59~85	28~76	41~85	59~85	28~76	41~85	59~85	[DEG]
	5	5	5	4	4	4	3	3	3	4	4	4	4	4	4	4	4	4	3	3	3	2	2	2	
	60t	60t	60t	60t	60t	60t	26t	26t	26t	60t	60t	60t	60t	60t	60t	60t	60t	60t	26t	26t	26t	26t	26t	26t	

m	43.0	43.0	43.0	43.0	43.0	43.0	47.4	47.4	47.4	47.4	47.4	47.4	51.7	51.7	51.7	51.7	51.7	51.7	56.0	56.0	56.0	60.0	60.0	60.0	m
°	5	20	40	5	20	40	5	20	40	5	20	40	5	20	40	5	20	40	5	20	40	5	20	40	°
3.0																									3.0
3.5																									3.5
4.0																									4.0
4.5																									4.5
5.0																									5.0
6.0																									6.0
7.0		17.1	17.1		12.1	12.1		13.9			12.4														7.0
8.0		17.1	17.1		12.1	12.1		13.9	13.9		12.4	12.4		11.1			9.8								8.0
9.0		17.1	17.1		12.1	12.1		13.9	13.9		12.4	12.4		11.1	11.1		9.8	9.8		9.0	9.0		7.8		9.0
10.0		17.1	17.1		12.1	12.1		13.9	13.9		12.4	12.4		11.1	11.1		9.8	9.8		9.0	9.0		7.8	7.8	10.0
11.0		17.1	17.1		12.1	12.1		13.9	13.9		12.4	12.4		11.1	11.1		9.8	9.8		9.0	9.0		7.8	7.8	11.0
12.0		17.1	17.1		12.1	12.1		13.9	13.9		12.4	12.4		11.1	11.1		9.8	9.8		9.0	9.0		7.8	7.8	12.0
14.0	17.1	17.1	17.1	12.1	12.1	12.1		13.9	13.9		12.4	12.4		11.1	11.1		9.8	9.8		9.0	9.0		7.8	7.8	14.0
16.0	17.1	17.1	16.8	11.5	11.4	11.2	13.9	13.9	13.9	12.4	12.4	12.4	11.1	11.1	11.1	9.8	9.8	9.8		9.0	9.0		7.8	7.8	16.0
18.0	15.6	15.5	15.4	10.4	10.3	10.2	13.9	13.9	13.7	12.4	12.1	11.8	11.1	11.1	11.1	9.8	9.8	9.8	9.0	9.0	9.0		7.8	7.8	18.0
20.0	14.2	14.1	14.0	9.5	9.4	9.3	13.3	13.0	12.7	11.4	11.1	10.9	11.1	11.1	11.1	9.8	9.8	9.8	9.0	9.0	9.0	7.8	7.8	7.8	20.0
22.0	12.9	12.8	12.8	8.7	8.6	8.5	12.2	12.1	11.9	10.5	10.3	10.1	10.9	10.7	10.5	9.5	9.4	9.3	9.0	9.0	9.0	7.8	7.8	7.8	22.0
24.0	11.8	11.8	11.7	8.0	7.9	7.8	11.2	11.2	11.1	9.7	9.6	9.4	10.2	10.0	9.8	8.9	8.7	8.6	9.0	9.0	8.9	7.6	7.4	7.3	24.0
26.0	10.7	10.8	10.8	7.4	7.3	7.3	10.2	10.2	10.3	9.1	8.9	8.8	9.5	9.3	9.2	8.2	8.1	8.0	8.6	8.4	8.3	7.1	6.9	6.8	26.0
28.0	9.4	9.5		6.8	6.8		9.3	9.3	9.4	8.5	8.4	8.3	8.9	8.8	8.7	7.7	7.6	7.5	8.0	7.9	7.8	6.6	6.5	6.4	28.0
30.0	8.3	8.3		6.4	6.3		8.4	8.4		8.0	7.9		8.2	8.2	8.2	7.2	7.1	7.1	7.6	7.5	7.4	6.2	6.1	6.0	30.0
32.0	7.3	7.3		6.0	5.9		7.4	7.4		7.4	7.4		7.5	7.5		6.8	6.7		7.1	7.0	7.0	5.8	5.7	5.7	32.0
34.0	6.4	6.5		5.5	5.5		6.5	6.6		6.8	6.8		6.7	6.8		6.4	6.3		6.7	6.6		5.5	5.4	5.4	34.0
36.0	5.7	5.7		5.1	5.2		5.8	5.8		6.3	6.3		6.0	6.0		6.0	6.0		6.2	6.3		5.1	5.1		36.0
38.0	5.0			4.8			5.1	5.1		5.7	5.7		5.3	5.3		5.6	5.6		5.6	5.6		4.7	4.8		38.0
40.0	4.4			4.5			4.5	4.5		5.1	5.1		4.7	4.7		5.2	5.2		5.0	5.0		4.4	4.4		40.0
44.0							3.5			4.1			3.7			4.3			3.9	4.0		3.7	3.7		44.0
48.0													2.9			3.5			3.1			3.1	3.1		48.0
52.0																			2.4			2.4			52.0
56.0																						1.8			56.0
60.0																									60.0
64.0																									64.0
68.0																									68.0
72.0																									72.0
1	92	92	92	0	0	0	92	92	92	46	46	46	92	92	92	46	46	46	92	92	92	100	100	100	1
2	92	92	92	46	46	46	92	92	92	92	92	92	92	92	92	92	92	92	92	92	92	100	100	100	2
3	46	46	46	92	92	92	92	92	92	92	92	92	92	92	92	92	92	92	92	92	92	100	100	100	3
4	46	46	46	92	92	92	46	46	46	92	92	92	92	92	92	92	92	92	92	92	92	100	100	100	4
5	46	46	46	92	92	92	46	46	46	46	46	46	46	46	46	92	92	92	92	92	92	100	100	100	5
ID	42	42	42	21	21	21	38	38	38	31	31	31	32	32	32	23	23	23	24	24	24	16	16	16	ID
[DEG]	28~76	39~85	58~85	29~76	39~85	58~85	29~76	39~85	60~85	29~76	39~85	59~85	29~76	46~85	61~85	29~76	46~85	60~85	29~76	45~85	62~85	29~76	44~85	62~85	[DEG]
	2	2	2	2	2	2	2	2	2	2	2	2	2	2	2	2	2	2	2	2	2	2	2	2	
	26t	26t	26t	26t	26t	26t	26t	26t	26t	26t	26t	26t	26t	26t	26t	26t	26t	26t	26t	26t	26t	26t	26t	26t	

HLJ	1.0m + 9.2m	40.9 t	8.0m x 7.5m	360 °	JPN

m	12.8	12.8	12.8	25.8	25.8	25.8	25.8	25.8	25.8	30.1	30.1	30.1	30.1	30.1	30.1	34.4	34.4	34.4	34.4	34.4	34.4	34.4	34.4	34.4	m
°	5	20	40	5	20	40	5	20	40	5	20	40	5	20	40	5	20	40	5	20	40	5	20	40	°
3.0																									3.0
3.5																									3.5
4.0	15.0																								4.0
4.5	15.0																								4.5
5.0	15.0	13.5																							5.0
6.0	15.0	12.4			14.4			14.1																	6.0
7.0	14.8	11.4	8.9	15.0	13.5		14.3	13.3			13.6			13.8			13.8			13.4					7.0
8.0	13.4	10.6	8.4	15.0	12.8		14.3	12.5		15.0	12.9		15.0	13.1			13.2			13.3			10.1		8.0
9.0	12.2	9.9	8.0	15.0	12.1	8.7	14.0	11.9	8.6	15.0	12.3	8.8	15.0	12.5	8.8	15.0	12.6		13.4	12.7			10.1		9.0
10.0	11.2	9.2	7.6	15.0	11.5	8.4	13.2	11.3	8.4	15.0	11.8	8.5	15.0	11.9	8.6	15.0	12.1	8.6	13.4	12.2	8.6	10.1	10.1		10.0
11.0	10.4	8.7	7.3	15.0	10.9	8.2	12.5	10.8	8.1	15.0	11.3	8.3	15.0	11.4	8.3	15.0	11.6	8.4	13.4	11.7	8.4	10.1	10.1	8.3	11.0
12.0	9.6	8.2	7.0	14.2	10.4	7.9	11.7	10.3	7.9	15.0	10.8	8.1	15.0	10.9	8.1	15.0	11.1	8.2	13.4	11.2	8.2	10.1	10.1	8.1	12.0
14.0	8.4	7.4	6.5	12.6	9.6	7.5	10.3	9.4	7.4	13.5	10.0	7.7	13.7	10.1	7.7	14.4	10.3	7.8	13.4	10.4	7.8	10.1	9.9	7.8	14.0
16.0	7.5	6.8		11.3	8.9	7.1	9.1	8.4	7.1	12.2	9.3	7.3	12.3	9.3	7.3	13.1	9.7	7.5	13.2	9.7	7.5	9.7	9.2	7.4	16.0
18.0	6.8			10.2	8.3	6.8	8.1	7.6	6.8	11.1	8.7	7.0	11.2	8.7	7.0	11.9	9.1	7.2	12.0	9.1	7.2	8.7	8.4	7.1	18.0
20.0				9.3	7.7	6.5	7.3	6.9	6.5	10.2	8.2	6.7	10.2	8.2	6.8	11.0	8.6	6.9	11.0	8.6	6.9	7.8	7.6	6.9	20.0
22.0				8.6	7.3	6.3	6.7	6.3	6.1	9.4	7.7	6.5	9.4	7.8	6.5	10.1	8.1	6.7	10.2	8.2	6.7	7.1	6.9	6.7	22.0
24.0				8.0	6.9		6.1	5.8		8.7	7.3	6.3	8.8	7.4	6.3	9.4	7.7	6.5	9.5	7.7	6.5	6.4	6.3	6.2	24.0
26.0				7.4	6.6		5.6	5.4		8.1	7.0		8.2	7.0		8.8	7.4	6.3	8.9	7.4	6.3	5.9	5.8	5.7	26.0
28.0				7.0	6.3		5.2	5.0		7.6	6.7		7.7	6.7		8.3	7.0		8.3	7.1		5.4	5.3		28.0
30.0				6.6			4.8			7.2	6.4		7.2	6.4		7.8	6.8		7.9	6.8		5.0	4.9		30.0
32.0										6.8	6.2		6.8	6.2		7.4	6.5		7.4	6.5		4.6	4.6		32.0
34.0										6.4			6.5			6.6	6.3		7.1	6.3		4.3	4.3		34.0
36.0																5.9			6.7			4.0			36.0
38.0																5.2			6.0			3.7			38.0
40.0																									40.0
44.0																									44.0
48.0																									48.0
52.0																									52.0
56.0																									56.0
60.0																									60.0
64.0																									64.0
68.0																									68.0
72.0																									72.0
1	0	0	0	46	46	46	0	0	0	92	92	92	46	46	46	92	92	92	46	46	46	0	0	0	1
2	0	0	0	46	46	46	0	0	0	46	46	46	46	46	46	46	46	46	46	46	46	0	0	0	2
3	0	0	0	46	46	46	0	0	0	46	46	46	46	46	46	46	46	46	46	46	46	46	46	46	3
4	0	0	0	0	0	0	46	46	46	0	0	0	46	46	46	46	46	46	46	46	46	92	92	92	4
5	0	0	0	0	0	0	92	92	92	0	0	0	0	0	0	0	0	0	46	46	46	92	92	92	5
ID	1	1	1	66	66	66	17	17	17	67	67	67	54	54	54	55	55	55	49	49	49	19	19	19	ID
[DEG]	0~79	44~85	57~85	26~79	37~85	56~85	26~79	38~85	57~85	27~79	37~85	58~85	27~79	37~85	57~85	26~79	41~85	58~85	27~79	41~85	59~85	27~79	41~85	59~85	[DEG]
	2	2	2	2	2	2	2	2	2	2	2	2	2	2	2	2	2	2	2	2	2	2	2	2	
	26t	26t	26t	26t	26t	26t	26t	26t	26t	26t	26t	26t	26t	26t	26t	26t	26t	26t	26t	26t	26t	26t	26t	26t	

m	43.0	43.0	43.0	43.0	43.0	43.0	47.4	47.4	47.4	47.4	47.4	47.4	51.7	51.7	51.7	51.7	51.7	51.7	56.0	56.0	56.0	60.0	60.0	60.0	m
°	5	20	40	5	20	40	5	20	40	5	20	40	5	20	40	5	20	40	5	20	40	5	20	40	°
3.0																									3.0
3.5																									3.5
4.0																									4.0
4.5																									4.5
5.0																									5.0
6.0																									6.0
7.0																									7.0
8.0																									8.0
9.0		10.6			7.2																				9.0
10.0		10.6			7.2			8.4			7.5														10.0
11.0		10.6			7.2			8.4			7.5			7.0			6.4			6.4					11.0
12.0	10.6	10.6	8.3	7.2	7.2	7.2		8.4			7.5			7.0			6.4			6.4			5.7		12.0
14.0	10.6	10.6	7.9	7.2	7.2	7.2	8.4	8.4	8.0	7.5	7.5	7.5		7.0	7.0	6.4	6.4	6.4		6.4			5.7		14.0
16.0	10.6	10.2	7.6	7.2	7.2	7.2	8.4	8.4	7.7	7.5	7.5	7.5	7.0	7.0	7.0	6.4	6.4	6.4	6.4	6.4	6.4		5.7	5.7	16.0
18.0	10.6	9.6	7.4	7.2	7.2	7.2	8.4	8.4	7.4	7.5	7.5	7.5	7.0	7.0	7.0	6.4	6.4	6.4	6.4	6.4	6.4	5.7	5.7	5.7	18.0
20.0	10.6	9.2	7.1	7.2	7.2	7.1	8.4	8.4	7.2	7.5	7.5	7.2	7.0	7.0	7.0	6.4	6.4	6.4	6.4	6.4	6.4	5.7	5.7	5.7	20.0
22.0	10.6	8.7	6.9	7.2	7.2	6.9	8.4	8.4	7.0	7.5	7.5	7.0	7.0	7.0	7.0	6.4	6.4	6.4	6.4	6.4	6.4	5.7	5.7	5.7	22.0
24.0	10.6	8.3	6.7	7.2	7.0	6.7	8.4	8.4	6.8	7.5	7.5	6.8	7.0	7.0	6.9	6.4	6.4	6.4	6.4	6.4	6.4	5.7	5.7	5.5	24.0
26.0	10.0	8.0	6.6	6.8	6.6	6.4	8.4	8.2	6.6	7.5	7.5	6.7	7.0	7.0	6.7	6.4	6.4	6.4	6.4	6.4	6.4	5.5	5.4	5.2	26.0
28.0	9.4	7.6	6.4	6.3	6.2	6.0	8.4	7.9	6.5	7.5	7.4	6.5	7.0	7.0	6.6	6.4	6.4	6.2	6.4	6.4	6.2	5.4	5.1	4.9	28.0
30.0	8.6	7.4	6.3	5.8	5.7	5.6	8.0	7.6	6.3	7.2	6.9	6.3	7.0	7.0	6.4	6.4	6.1	5.9	6.4	6.2	5.9	5.0	4.8	4.6	30.0
32.0	7.6	7.1	6.2	5.3	5.3	5.3	7.3	7.3	6.2	6.7	6.5	6.2	7.0	6.8	6.3	6.1	5.8	5.7	6.2	5.9	5.7	4.7	4.5	4.3	32.0
34.0	6.8	6.9		4.9	4.9		6.7	6.9	6.1	6.2	6.2	6.0	6.5	6.4	6.2	5.8	5.6	5.4	6.0	5.7	5.5	4.4	4.2	4.1	34.0
36.0	6.0	6.3		4.6	4.6		6.2	6.3		5.8	5.8		6.0	6.1	5.9	5.4	5.4	5.2	5.7	5.4	5.3	4.1	4.0	3.9	36.0
38.0	5.4	5.6		4.2	4.3		5.5	5.7		5.4	5.4		5.5	5.7		5.1	5.0		5.4	5.2	5.1	3.9	3.7	3.7	38.0
40.0	4.8	5.0		3.9	4.0		4.9	5.1		5.0	5.0		5.0	5.2		4.8	4.7		5.0	5.0		3.7	3.5	3.5	40.0
44.0	3.8			3.4			3.9	4.0		4.3	4.4		4.0	4.2		4.1	4.2		4.2	4.4		3.3	3.2		44.0
48.0				3.0			3.1			3.6			3.2	3.3		3.6	3.7		3.4	3.5		2.9	2.9		48.0
52.0							2.3			2.9			2.5			3.0			2.7	2.8		2.5	2.6		52.0
56.0													1.8			2.5			2.0			2.0	2.1		56.0
60.0																			1.4			1.4			60.0
64.0																									64.0
68.0																									68.0
72.0																									72.0
1	92	92	92	0	0	0	92	92	92	46	46	46	92	92	92	46	46	46	92	92	92	100	100	100	1
2	92	92	92	46	46	46	92	92	92	92	92	92	92	92	92	92	92	92	92	92	92	100	100	100	2
3	46	46	46	92	92	92	92	92	92	92	92	92	92	92	92	92	92	92	92	92	92	100	100	100	3
4	46	46	46	92	92	92	46	46	46	92	92	92	92	92	92	92	92	92	92	92	92	100	100	100	4
5	46	46	46	92	92	92	46	46	46	46	46	46	46	46	46	92	92	92	92	92	92	100	100	100	5
ID	42	42	42	21	21	21	38	38	38	31	31	31	32	32	32	23	23	23	24	24	24	16	16	16	ID
[DEG]	32~79	43~85	58~85	22~79	44~85	58~85	22~79	43~85	60~85	22~79	43~85	60~85	23~79	42~85	61~85	23~79	43~85	61~85	24~79	42~85	62~85	32~79	41~85	62~85	[DEG]
	2	2	2	1	1	1	1	1	1	1	1	1	1	1	1	1	1	1	1	1	1	1	1	1	
	26t	26t	26t	8.7t	8.7t	8.7t	8.7t	8.7t	8.7t	8.7t	8.7t	8.7t	8.7t	8.7t	8.7t	8.7t	8.7t	8.7t	8.7t	8.7t	8.7t	8.7t	8.7t	8.7t	

油圧チルトジブ

HLJ	1.0m + 17.0m	40.9 t	8.0m x 7.5m	360 °	JPN

m	12.8	12.8	12.8	25.8	25.8	25.8	25.8	25.8	25.8	30.1	30.1	30.1	30.1	30.1	30.1	34.4	34.4	34.4	34.4	34.4	34.4	34.4	34.4	34.4	m
°	5	20	40	5	20	40	5	20	40	5	20	40	5	20	40	5	20	40	5	20	40	5	20	40	°
3.0																									3.0
3.5																									3.5
4.0																									4.0
4.5																									4.5
5.0																									5.0
6.0	7.3																								6.0
7.0	6.8																								7.0
8.0	6.4	5.4		7.0			5.6																		8.0
9.0	6.0	5.1		6.7			5.6			6.7			6.5												9.0
10.0	5.7	4.8		6.4	5.0		5.6	4.8		6.5			6.3			6.3			5.9			4.6			10.0
11.0	5.3	4.6		6.1	4.8		5.6	4.6		6.2	4.9		6.1	4.8		6.1	4.8		5.9	4.7		4.6			11.0
12.0	5.1	4.4		5.8	4.7		5.5	4.5		6.0	4.7		5.9	4.6		5.9	4.7		5.7	4.6		4.6	4.4		12.0
14.0	4.6	4.0	3.5	5.4	4.4		5.1	4.2		5.5	4.4		5.4	4.4		5.5	4.4		5.4	4.3		4.6	4.2		14.0
16.0	4.2	3.7	3.3	5.0	4.1	3.4	4.8	3.9	3.3	5.1	4.2	3.4	5.1	4.1	3.4	5.2	4.2	3.4	5.1	4.1		4.6	4.0		16.0
18.0	3.8	3.4	3.1	4.6	3.9	3.3	4.4	3.7	3.2	4.8	3.9	3.3	4.8	3.9	3.3	4.9	3.9	3.3	4.8	3.9	3.2	4.6	3.8	3.2	18.0
20.0	3.5	3.2	3.0	4.3	3.7	3.1	4.2	3.5	3.1	4.5	3.7	3.2	4.5	3.7	3.2	4.6	3.8	3.2	4.5	3.7	3.1	4.3	3.6	3.1	20.0
22.0	3.3	3.1	2.9	4.1	3.5	3.0	3.9	3.4	3.0	4.3	3.6	3.1	4.2	3.5	3.0	4.3	3.6	3.1	4.3	3.5	3.0	4.1	3.5	3.0	22.0
24.0	3.1	2.9		3.8	3.3	2.9	3.7	3.2	2.9	4.0	3.4	3.0	4.0	3.4	2.9	4.1	3.5	3.0	4.0	3.4	2.9	3.9	3.3	2.9	24.0
26.0	3.0			3.6	3.2	2.9	3.5	3.1	2.8	3.8	3.3	2.9	3.8	3.2	2.9	3.9	3.3	2.9	3.8	3.3	2.9	3.7	3.2	2.8	26.0
28.0				3.5	3.1	2.8	3.4	3.0	2.7	3.6	3.2	2.8	3.6	3.1	2.8	3.7	3.2	2.8	3.7	3.2	2.8	3.6	3.1	2.7	28.0
30.0				3.3	3.0		3.2	2.9		3.5	3.0	2.8	3.4	3.0	2.7	3.6	3.1	2.8	3.5	3.1	2.7	3.4	3.0	2.7	30.0
32.0				3.2	2.9		3.1	2.8		3.3	2.9	2.7	3.3	2.9	2.7	3.4	3.0	2.7	3.4	3.0	2.7	3.3	2.9	2.6	32.0
34.0				3.0	2.8		3.0	2.7		3.2	2.9		3.2	2.8		3.3	2.9	2.7	3.3	2.9	2.6	3.2	2.8	2.6	34.0
36.0				2.9	2.7		2.9	2.7		3.1	2.8		3.1	2.8		3.2	2.8		3.1	2.8		3.1	2.7		36.0
38.0				2.9			2.8			3.0	2.7		3.0	2.7		3.1	2.8		3.0	2.7		3.0	2.7		38.0
40.0										2.9			2.9			3.0	2.7		2.9	2.7		2.9	2.6		40.0
44.0																2.8			2.8			2.6			44.0
48.0																									48.0
52.0																									52.0
56.0																									56.0
60.0																									60.0
64.0																									64.0
68.0																									68.0
72.0																									72.0
1	0	0	0	46	46	46	0	0	0	92	92	92	46	46	46	92	92	92	46	46	46	0	0	0	1
2	0	0	0	46	46	46	0	0	0	46	46	46	46	46	46	46	46	46	46	46	46	0	0	0	2
3	0	0	0	46	46	46	0	0	0	46	46	46	46	46	46	46	46	46	46	46	46	46	46	46	3
4	0	0	0	0	0	0	46	46	46	0	0	0	46	46	46	46	46	46	46	46	46	92	92	92	4
5	0	0	0	0	0	0	92	92	92	0	0	0	0	0	0	0	0	0	46	46	46	92	92	92	5
ID	1	1	1	66	66	66	17	17	17	67	67	67	54	54	54	55	55	55	49	49	49	19	19	19	ID
[DEG]	0~81	41~85	56~85	23~81	36~85	59~85	24~81	37~85	60~85	30~81	41~85	57~85	30~81	40~85	57~85	30~81	43~85	58~85	30~81	44~85	58~85	31~81	44~85	58~85	[DEG]
	1	1	1	1	1	1	1	1	1	1	1	1	1	1	1	1	1	1	1	1	1	1	1	1	
	8.7t	8.7t	8.7t	8.7t	8.7t	8.7t	8.7t	8.7t	8.7t	8.7t	8.7t	8.7t	8.7t	8.7t	8.7t	8.7t	8.7t	8.7t	8.7t	8.7t	8.7t	8.7t	8.7t	8.7t	

m	43.0	43.0	43.0	43.0	43.0	43.0	47.4	47.4	47.4	47.4	47.4	47.4	51.7	51.7	51.7	51.7	51.7	51.7	56.0	56.0	56.0	60.0	60.0	60.0	m
°	5	20	40	5	20	40	5	20	40	5	20	40	5	20	40	5	20	40	5	20	40	5	20	40	°
3.0																									3.0
3.5																									3.5
4.0																									4.0
4.5																									4.5
5.0																									5.0
6.0																									6.0
7.0																									7.0
8.0																									8.0
9.0																									9.0
10.0																									10.0
11.0																									11.0
12.0	5.5			4.1																					12.0
14.0	5.4	4.3		4.1	4.1		4.7	4.2		4.3	4.2		4.1			3.9									14.0
16.0	5.1	4.1		4.1	3.9		4.7	4.1		4.3	4.0		4.1	4.0		3.9	3.9		3.9	3.8		3.6	3.6		16.0
18.0	4.8	3.9	3.2	4.1	3.8		4.7	3.9		4.3	3.8		4.1	3.8		3.9	3.7		3.9	3.7		3.6	3.6		18.0
20.0	4.6	3.8	3.1	4.1	3.6	3.1	4.6	3.7	3.1	4.3	3.7	3.1	4.1	3.7	3.1	3.9	3.6	3.0	3.9	3.6		3.6	3.5		20.0
22.0	4.4	3.6	3.0	4.1	3.5	3.0	4.4	3.6	3.0	4.3	3.5	3.0	4.1	3.5	3.0	3.9	3.5	2.9	3.9	3.5	2.9	3.6	3.4	2.9	22.0
24.0	4.2	3.5	3.0	4.0	3.3	2.9	4.2	3.5	2.9	4.1	3.4	2.9	4.1	3.4	2.9	3.9	3.4	2.9	3.9	3.3	2.9	3.6	3.3	2.8	24.0
26.0	4.0	3.3	2.9	3.8	3.2	2.8	4.0	3.3	2.9	3.9	3.3	2.8	4.0	3.3	2.8	3.8	3.2	2.8	3.8	3.2	2.8	3.6	3.2	2.8	26.0
28.0	3.8	3.2	2.8	3.7	3.1	2.7	3.9	3.2	2.8	3.8	3.2	2.8	3.8	3.2	2.8	3.7	3.1	2.7	3.7	3.1	2.7	3.6	3.1	2.7	28.0
30.0	3.7	3.1	2.8	3.5	3.0	2.7	3.7	3.1	2.7	3.6	3.1	2.7	3.7	3.1	2.7	3.6	3.1	2.7	3.6	3.1	2.7	3.5	3.0	2.6	30.0
32.0	3.5	3.0	2.7	3.4	2.9	2.6	3.6	3.0	2.7	3.5	3.0	2.7	3.5	3.0	2.7	3.5	3.0	2.6	3.5	3.0	2.6	3.4	2.9	2.6	32.0
34.0	3.4	2.9	2.6	3.3	2.9	2.6	3.5	3.0	2.6	3.4	2.9	2.6	3.4	2.9	2.6	3.4	2.9	2.6	3.4	2.9	2.6	3.3	2.9	2.5	34.0
36.0	3.3	2.9	2.6	3.2	2.8	2.5	3.3	2.9	2.6	3.3	2.8	2.6	3.3	2.9	2.6	3.3	2.8	2.5	3.3	2.8	2.5	3.2	2.8	2.5	36.0
38.0	3.2	2.8	2.6	3.1	2.7	2.5	3.2	2.8	2.5	3.2	2.8	2.5	3.2	2.8	2.5	3.2	2.7	2.5	3.2	2.8	2.5	3.2	2.7	2.5	38.0
40.0	3.1	2.7		3.0	2.6		3.1	2.7	2.5	3.1	2.7	2.5	3.1	2.7	2.5	3.1	2.7	2.4	3.1	2.7	2.4	3.0	2.7	2.4	40.0
44.0	2.9	2.6		2.8	2.5		3.0	2.6		2.9	2.6		3.0	2.6	2.4	2.9	2.6	2.4	2.9	2.6	2.4	2.7	2.5	2.3	44.0
48.0	2.8	2.5		2.7	2.5		2.8	2.5		2.8	2.5		2.8	2.5		2.8	2.5		2.8	2.5		2.4	2.3	2.3	48.0
52.0	2.7			2.4			2.7	2.5		2.7	2.4		2.7	2.4		2.7	2.4		2.7	2.4		2.1	2.1		52.0
56.0							2.2			2.6			2.2	2.4		2.6	2.3		2.4	2.3		1.9	1.9		56.0
60.0													1.7			2.2			1.8	2.0		1.7	1.7		60.0
64.0																			1.4			1.3	1.4		64.0
68.0																									68.0
72.0																									72.0
1	92	92	92	0	0	0	92	92	92	46	46	46	92	92	92	46	46	46	92	92	92	100	100	100	1
2	92	92	92	46	46	46	92	92	92	92	92	92	92	92	92	92	92	92	92	92	92	100	100	100	2
3	46	46	46	92	92	92	92	92	92	92	92	92	92	92	92	92	92	92	92	92	92	100	100	100	3
4	46	46	46	92	92	92	46	46	46	92	92	92	92	92	92	92	92	92	92	92	92	100	100	100	4
5	46	46	46	92	92	92	46	46	46	46	46	46	46	46	46	92	92	92	92	92	92	100	100	100	5
ID	42	42	42	21	21	21	38	38	38	31	31	31	32	32	32	23	23	23	24	24	24	16	16	16	ID
[DEG]	31~81	42~85	60~85	31~81	43~85	60~85	31~81	42~85	61~85	31~81	42~85	61~85	31~81	42~85	60~85	32~81	42~85	60~85	32~81	42~85	63~85	38~81	41~85	62~85	[DEG]
	1	1	1	1	1	1	1	1	1	1	1	1	1	1	1	1	1	1	1	1	1	1	1	1	
	8.7t	8.7t	8.7t	8.7t	8.7t	8.7t	8.7t	8.7t	8.7t	8.7t	8.7t	8.7t	8.7t	8.7t	8.7t	8.7t	8.7t	8.7t	8.7t	8.7t	8.7t	8.7t	8.7t	8.7t	

HLJ	1.0m + 24.0m	40.9 t	8.0m x 7.5m	360 °	JPN

m	12.8	12.8	12.8	25.8	25.8	25.8	25.8	25.8	25.8	30.1	30.1	30.1	30.1	30.1	30.1	34.4	34.4	34.4	34.4	34.4	34.4	34.4	34.4	34.4	m
°	5	20	40	5	20	40	5	20	40	5	20	40	5	20	40	5	20	40	5	20	40	5	20	40	°
3.0																									3.0
3.5																									3.5
4.0																									4.0
4.5																									4.5
5.0																									5.0
6.0																									6.0
7.0																									7.0
8.0	5.1																								8.0
9.0	5.1																								9.0
10.0	5.1			4.9			3.7																		10.0
11.0	5.1			4.9			3.7			4.6			4.3												11.0
12.0	5.1	4.5		4.9			3.7			4.6			4.3			4.2			4.0			3.2			12.0
14.0	4.8	4.0		4.9	4.4		3.7	3.7		4.6	4.4		4.3	4.3		4.2			4.0			3.2			14.0
16.0	4.3	3.6		4.9	4.1		3.7	3.7		4.6	4.1		4.3	4.1		4.2	4.1		4.0	4.0		3.2	3.2		16.0
18.0	3.8	3.3		4.6	3.8		3.7	3.7		4.6	3.8		4.3	3.9		4.2	3.9		4.0	3.8		3.2	3.2		18.0
20.0	3.4	3.0	2.6	4.3	3.5		3.7	3.4		4.4	3.6		4.3	3.6		4.2	3.6		4.0	3.7		3.2	3.2		20.0
22.0	3.1	2.7	2.4	4.1	3.2	2.6	3.7	3.2	2.5	4.2	3.3	2.6	4.2	3.4	2.6	4.2	3.4	2.6	4.0	3.4		3.2	3.2		22.0
24.0	2.8	2.5	2.2	3.7	3.0	2.4	3.7	3.0	2.4	4.0	3.1	2.5	4.0	3.1	2.5	4.0	3.2	2.5	3.9	3.2	2.5	3.2	3.2	2.5	24.0
26.0	2.6	2.3	2.1	3.5	2.8	2.3	3.4	2.8	2.3	3.7	2.9	2.4	3.7	3.0	2.4	3.9	3.0	2.4	3.8	3.1	2.4	3.2	3.0	2.4	26.0
28.0	2.4	2.2	2.0	3.2	2.7	2.2	3.2	2.6	2.2	3.4	2.8	2.3	3.4	2.8	2.3	3.6	2.9	2.3	3.6	2.9	2.3	3.2	2.8	2.3	28.0
30.0	2.2	2.0		3.0	2.5	2.1	2.9	2.5	2.1	3.2	2.6	2.2	3.2	2.6	2.2	3.4	2.7	2.2	3.4	2.7	2.2	3.2	2.7	2.2	30.0
32.0	2.0	1.9		2.8	2.4	2.0	2.8	2.4	2.0	3.0	2.5	2.1	3.0	2.5	2.1	3.2	2.6	2.1	3.2	2.6	2.1	3.1	2.6	2.1	32.0
34.0				2.6	2.3	2.0	2.6	2.3	2.0	2.8	2.4	2.0	2.8	2.4	2.0	3.0	2.5	2.1	3.0	2.5	2.1	3.0	2.5	2.1	34.0
36.0				2.5	2.2	1.9	2.4	2.1	1.9	2.6	2.3	2.0	2.7	2.3	2.0	2.8	2.4	2.0	2.8	2.4	2.0	2.8	2.4	2.0	36.0
38.0				2.3	2.1		2.3	2.1		2.5	2.2	1.9	2.5	2.2	1.9	2.7	2.3	1.9	2.7	2.3	1.9	2.6	2.3	1.9	38.0
40.0				2.2	2.0		2.2	2.0		2.4	2.1		2.4	2.1		2.5	2.2	1.9	2.5	2.2	1.9	2.5	2.2	1.9	40.0
44.0				2.0			2.0			2.1	1.9		2.1	1.9		2.3	2.0		2.3	2.0		2.3	2.0		44.0
48.0										2.0			2.0			2.1	1.9		2.1	1.9		2.0	1.9		48.0
52.0																1.9			1.9			1.8			52.0
56.0																									56.0
60.0																									60.0
64.0																									64.0
68.0																									68.0
72.0																									72.0
1	0	0	0	46	46	46	0	0	0	92	92	92	46	46	46	92	92	92	46	46	46	0	0	0	1
2	0	0	0	46	46	46	0	0	0	46	46	46	46	46	46	46	46	46	46	46	46	0	0	0	2
3	0	0	0	46	46	46	0	0	0	46	46	46	46	46	46	46	46	46	46	46	46	46	46	46	3
4	0	0	0	0	0	0	46	46	46	0	0	0	46	46	46	46	46	46	46	46	46	92	92	92	4
5	0	0	0	0	0	0	92	92	92	0	0	0	0	0	0	0	0	0	46	46	46	92	92	92	5
ID	1	1	1	66	66	66	17	17	17	67	67	67	54	54	54	55	55	55	49	49	49	19	19	19	ID
[DEG]	0~81	37~85	59~85	26~81	44~85	58~85	28~81	45~85	58~85	27~81	43~85	59~85	27~81	43~85	59~85	27~81	42~85	59~85	27~81	42~85	60~85	28~81	43~85	61~85	[DEG]
	1	1	1	1	1	1	1	1	1	1	1	1	1	1	1	1	1	1	1	1	1	1	1	1	
	8.7t	8.7t	8.7t	8.7t	8.7t	8.7t	8.7t	8.7t	8.7t	8.7t	8.7t	8.7t	8.7t	8.7t	8.7t	8.7t	8.7t	8.7t	8.7t	8.7t	8.7t	8.7t	8.7t	8.7t	

m	43.0	43.0	43.0	43.0	43.0	43.0	47.4	47.4	47.4	47.4	47.4	47.4	51.7	51.7	51.7	51.7	51.7	51.7	56.0	56.0	56.0	60.0	60.0	60.0	m
°	5	20	40	5	20	40	5	20	40	5	20	40	5	20	40	5	20	40	5	20	40	5	20	40	°
3.0																									3.0
3.5																									3.5
4.0																									4.0
4.5																									4.5
5.0																									5.0
6.0																									6.0
7.0																									7.0
8.0																									8.0
9.0																									9.0
10.0																									10.0
11.0																									11.0
12.0																									12.0
14.0	3.8			2.9																					14.0
16.0	3.8			2.9			3.3			3.1			3.0			2.9									16.0
18.0	3.8	3.8		2.9	2.9		3.3	3.3		3.1	3.1		3.0	3.0		2.9			2.9						18.0
20.0	3.8	3.6		2.9	2.9		3.3	3.3		3.1	3.1		3.0	3.0		2.9	2.9		2.9	2.9		2.4			20.0
22.0	3.8	3.5		2.9	2.9		3.3	3.3		3.1	3.1		3.0	3.0		2.9	2.9		2.9	2.9		2.4	2.4		22.0
24.0	3.8	3.3	2.5	2.9	2.9		3.3	3.3		3.1	3.1		3.0	3.0		2.9	2.9		2.9	2.9		2.4	2.4		24.0
26.0	3.8	3.2	2.4	2.9	2.9	2.4	3.3	3.2	2.4	3.1	3.1	2.4	3.0	3.0		2.9	2.9		2.9	2.9		2.4	2.4		26.0
28.0	3.7	3.0	2.3	2.9	2.9	2.3	3.3	3.0	2.3	3.1	3.0	2.3	3.0	3.0	2.3	2.9	2.9	2.3	2.9	2.9	2.3	2.4	2.4		28.0
30.0	3.5	2.9	2.3	2.9	2.8	2.2	3.3	2.9	2.3	3.1	2.9	2.3	3.0	2.9	2.3	2.9	2.9	2.3	2.9	2.9	2.3	2.4	2.4	2.0	30.0
32.0	3.4	2.8	2.2	2.9	2.7	2.2	3.3	2.8	2.2	3.1	2.8	2.2	3.0	2.8	2.2	2.9	2.8	2.2	2.9	2.8	2.2	2.4	2.4	2.0	32.0
34.0	3.3	2.6	2.1	2.9	2.6	2.1	3.3	2.7	2.1	3.1	2.7	2.1	3.0	2.7	2.2	2.9	2.7	2.2	2.9	2.8	2.2	2.4	2.4	1.9	34.0
36.0	3.1	2.5	2.1	2.9	2.5	2.1	3.2	2.6	2.1	3.1	2.6	2.1	3.0	2.6	2.1	2.9	2.6	2.1	2.9	2.7	2.1	2.4	2.4	1.9	36.0
38.0	3.0	2.4	2.0	2.9	2.4	2.0	3.1	2.5	2.0	3.1	2.5	2.0	3.0	2.5	2.0	2.9	2.5	2.1	2.9	2.6	2.1	2.4	2.3	1.9	38.0
40.0	2.8	2.3	2.0	2.8	2.3	2.0	3.0	2.4	2.0	2.9	2.4	2.0	3.0	2.4	2.0	2.9	2.4	2.0	2.9	2.5	2.0	2.4	2.3	1.8	40.0
44.0	2.6	2.2	1.9	2.6	2.2	1.9	2.7	2.2	1.9	2.7	2.2	1.9	2.8	2.3	1.9	2.8	2.3	1.9	2.8	2.3	1.9	2.2	2.1	1.7	44.0
48.0	2.4	2.1		2.3	2.0		2.5	2.1	1.8	2.5	2.1	1.8	2.6	2.2	1.9	2.6	2.2	1.9	2.7	2.2	1.9	1.9	1.9	1.7	48.0
52.0	2.2	1.9		2.1	1.9		2.3	2.0		2.3	2.0		2.4	2.0		2.4	2.0		2.5	2.1	1.8	1.7	1.7	1.6	52.0
56.0	2.0	1.8		1.9	1.8		2.1	1.9		2.1	1.9		2.2	1.9		2.2	1.9		2.3	2.0		1.5	1.5	1.5	56.0
60.0	1.9			1.7			1.8	1.8		2.0	1.8		1.9	1.9		2.0	1.9		2.0	1.9		1.4	1.3		60.0
64.0							1.3			1.8			1.4	1.6		1.8	1.8		1.5	1.7		1.2	1.2		64.0
68.0																1.4							1.1		68.0
72.0																									72.0
1	92	92	92	0	0	0	92	92	92	46	46	46	92	92	92	46	46	46	92	92	92	100	100	100	1
2	92	92	92	46	46	46	92	92	92	92	92	92	92	92	92	92	92	92	92	92	92	100	100	100	2
3	46	46	46	92	92	92	92	92	92	92	92	92	92	92	92	92	92	92	92	92	92	100	100	100	3
4	46	46	46	92	92	92	46	46	46	92	92	92	92	92	92	92	92	92	92	92	92	100	100	100	4
5	46	46	46	92	92	92	46	46	46	46	46	46	46	46	46	92	92	92	92	92	92	100	100	100	5
ID	42	42	42	21	21	21	38	38	38	31	31	31	32	32	32	23	23	23	24	24	24	16	16	16	ID
[DEG]	29~81	41~85	62~85	30~81	42~85	62~85	29~81	41~85	60~85	30~81	41~85	60~85	37~81	41~85	64~85	30~81	41~85	64~85	43~81	47~85	63~85	46~81	46~85	61~85	[DEG]
	1	1	1	1	1	1	1	1	1	1	1	1	1	1	1	1	1	1	1	1	1	1	1	1	
	8.7t	8.7t	8.7t	8.7t	8.7t	8.7t	8.7t	8.7t	8.7t	8.7t	8.7t	8.7t	8.7t	8.7t	8.7t	8.7t	8.7t	8.7t	8.7t	8.7t	8.7t	8.7t	8.7t	8.7t	

油圧チルトジブ

HLJ	1.0m + 31.0m	40.9 t	8.0m x 7.5m	360 °	JPN

m	12.8	12.8	12.8	25.8	25.8	25.8	25.8	25.8	25.8	30.1	30.1	30.1	30.1	30.1	30.1	34.4	34.4	34.4	34.4	34.4	34.4	34.4	34.4	34.4	m
°	5	20	40	5	20	40	5	20	40	5	20	40	5	20	40	5	20	40	5	20	40	5	20	40	°
3.0																									3.0
3.5																									3.5
4.0																									4.0
4.5																									4.5
5.0																									5.0
6.0																									6.0
7.0																									7.0
8.0																									8.0
9.0																									9.0
10.0	3.5																								10.0
11.0	3.5																								11.0
12.0	3.5			3.3			2.6																		12.0
14.0	3.5			3.3			2.6			3.1			2.9			2.9			2.8			2.3			14.0
16.0	3.5	3.0		3.3			2.6			3.1			2.9			2.9			2.8			2.3			16.0
18.0	3.2	2.7		3.3	3.0		2.6	2.6		3.1	3.0		2.9	2.9		2.9			2.8			2.3			18.0
20.0	2.9	2.5		3.3	2.7		2.6	2.6		3.1	2.8		2.9	2.8		2.9	2.8		2.8	2.8		2.3	2.3		20.0
22.0	2.6	2.2		3.3	2.5		2.6	2.5		3.1	2.6		2.9	2.6		2.9	2.6		2.8	2.6		2.3	2.3		22.0
24.0	2.3	2.0	1.7	3.0	2.3		2.6	2.3		3.1	2.4		2.9	2.4		2.9	2.4		2.8	2.4		2.3	2.3		24.0
26.0	2.1	1.9	1.6	2.7	2.2	1.7	2.6	2.1		2.9	2.2		2.9	2.2		2.9	2.3		2.8	2.3		2.3	2.2		26.0
28.0	1.9	1.7	1.5	2.5	2.0	1.6	2.5	2.0	1.6	2.7	2.1	1.6	2.7	2.1	1.6	2.8	2.2	1.6	2.8	2.2		2.3	2.1		28.0
30.0	1.7	1.6	1.4	2.3	1.9	1.5	2.3	1.9	1.5	2.5	2.0	1.5	2.5	2.0	1.5	2.6	2.0	1.6	2.6	2.0	1.6	2.3	2.0	1.5	30.0
32.0	1.6	1.5	1.3	2.2	1.8	1.4	2.1	1.8	1.4	2.3	1.9	1.5	2.3	1.9	1.5	2.4	1.9	1.5	2.4	1.9	1.5	2.3	1.9	1.5	32.0
34.0	1.5	1.4	1.2	2.0	1.7	1.4	2.0	1.7	1.4	2.1	1.7	1.4	2.2	1.8	1.4	2.3	1.8	1.4	2.3	1.8	1.4	2.2	1.8	1.4	34.0
36.0	1.4	1.3	1.2	1.9	1.6	1.3	1.8	1.6	1.3	2.0	1.7	1.3	2.0	1.7	1.3	2.1	1.7	1.4	2.1	1.7	1.4	2.1	1.7	1.4	36.0
38.0	1.3	1.2		1.7	1.5	1.3	1.7	1.5	1.3	1.9	1.6	1.3	1.9	1.6	1.3	2.0	1.6	1.3	2.0	1.6	1.3	2.0	1.6	1.3	38.0
40.0	1.2			1.6	1.4	1.2	1.6	1.4	1.2	1.8	1.5	1.2	1.8	1.5	1.2	1.9	1.6	1.3	1.9	1.6	1.3	1.9	1.5	1.3	40.0
44.0				1.4	1.3		1.4	1.3		1.6	1.3	1.2	1.6	1.3	1.2	1.7	1.4	1.2	1.7	1.4	1.2	1.6	1.4	1.2	44.0
48.0				1.3	1.2		1.3	1.2		1.4	1.2		1.4	1.2		1.5	1.3	1.1	1.5	1.3	1.1	1.5	1.3	1.1	48.0
52.0				1.2			1.1			1.3	1.1		1.3	1.1		1.4	1.2		1.3	1.2		1.3	1.2		52.0
56.0										1.1			1.1			1.2	1.1		1.2	1.1		1.2	1.1		56.0
60.0																1.1			1.1			1.1			60.0
64.0																									64.0
68.0																									68.0
72.0																									72.0
% 1	0	0	0	46	46	46	0	0	0	92	92	92	46	46	46	92	92	92	46	46	46	0	0	0	1
% 2	0	0	0	46	46	46	0	0	0	46	46	46	46	46	46	46	46	46	46	46	46	0	0	0	2
% 3	0	0	0	46	46	46	0	0	0	46	46	46	46	46	46	46	46	46	46	46	46	46	46	46	3
% 4	0	0	0	0	0	0	46	46	46	0	0	0	46	46	46	46	46	46	46	46	46	92	92	92	4
% 5	0	0	0	0	0	0	92	92	92	0	0	0	0	0	0	0	0	0	46	46	46	92	92	92	5
ID	1	1	1	66	66	66	17	17	17	67	67	67	54	54	54	55	55	55	49	49	49	19	19	19	ID
[DEG]	0~81	41~85	56~85	23~81	41~85	63~85	24~81	43~85	64~85	24~81	41~85	61~85	24~81	41~85	61~85	24~81	40~85	58~85	24~81	40~85	58~85	26~81	41~85	59~85	[DEG]
	1	1	1	1	1	1	1	1	1	1	1	1	1	1	1	1	1	1	1	1	1	1	1	1	
	8.7t	8.7t	8.7t	8.7t	8.7t	8.7t	8.7t	8.7t	8.7t	8.7t	8.7t	8.7t	8.7t	8.7t	8.7t	8.7t	8.7t	8.7t	8.7t	8.7t	8.7t	8.7t	8.7t	8.7t	

m	43.0	43.0	43.0	43.0	43.0	43.0	47.4	47.4	47.4	47.4	47.4	47.4	51.7	51.7	51.7	51.7	51.7	51.7	56.0	56.0	56.0	60.0	60.0	60.0	m
°	5	20	40	5	20	40	5	20	40	5	20	40	5	20	40	5	20	40	5	20	40	5	20	40	°
3.0																									3.0
3.5																									3.5
4.0																									4.0
4.5																									4.5
5.0																									5.0
6.0																									6.0
7.0																									7.0
8.0																									8.0
9.0																									9.0
10.0																									10.0
11.0																									11.0
12.0																									12.0
14.0																									14.0
16.0	2.7			2.1																					16.0
18.0	2.7			2.1			2.4			2.2			2.2			2.1									18.0
20.0	2.7			2.1			2.4			2.2			2.2			2.1									20.0
22.0	2.7	2.6		2.1	2.1		2.4	2.4		2.2	2.2		2.2			2.1			2.1			1.6			22.0
24.0	2.7	2.5		2.1	2.1		2.4	2.4		2.2	2.2		2.2	2.2		2.1	2.1		2.1	2.1		1.6			24.0
26.0	2.7	2.3		2.1	2.1		2.4	2.3		2.2	2.2		2.2	2.2		2.1	2.1		2.1	2.1		1.6	1.6		26.0
28.0	2.7	2.2		2.1	2.1		2.4	2.2		2.2	2.2		2.2	2.2		2.1	2.1		2.1	2.1		1.6	1.6		28.0
30.0	2.7	2.1	1.6	2.1	2.1		2.4	2.1		2.2	2.1		2.2	2.1		2.1	2.1		2.1	2.1		1.6	1.6		30.0
32.0	2.6	2.0	1.5	2.1	2.0	1.5	2.4	2.0	1.5	2.2	2.0	1.5	2.2	2.0		2.1	2.0		2.1	2.0		1.6	1.6		32.0
34.0	2.5	1.9	1.4	2.1	1.9	1.4	2.4	1.9	1.5	2.2	1.9	1.4	2.2	1.9	1.4	2.1	1.9	1.4	2.1	1.9	1.4	1.6	1.6		34.0
36.0	2.3	1.8	1.4	2.1	1.8	1.4	2.4	1.8	1.4	2.2	1.8	1.4	2.2	1.9	1.4	2.1	1.8	1.4	2.1	1.9	1.4	1.6	1.6	1.2	36.0
38.0	2.2	1.7	1.3	2.1	1.7	1.3	2.3	1.8	1.4	2.2	1.8	1.4	2.2	1.8	1.4	2.1	1.8	1.4	2.1	1.8	1.4	1.6	1.6	1.2	38.0
40.0	2.1	1.7	1.3	2.0	1.6	1.3	2.2	1.7	1.3	2.2	1.7	1.3	2.2	1.7	1.3	2.1	1.7	1.3	2.1	1.7	1.3	1.6	1.6	1.2	40.0
44.0	1.9	1.5	1.2	1.8	1.5	1.2	1.9	1.5	1.2	1.9	1.5	1.2	2.0	1.6	1.2	2.0	1.6	1.2	2.0	1.6	1.2	1.6	1.5	1.1	44.0
48.0	1.7	1.4	1.2	1.6	1.4	1.2	1.8	1.4	1.2	1.7	1.4	1.2	1.8	1.5	1.2	1.8	1.5	1.2	1.8	1.5	1.2	1.6	1.4	1.1	48.0
52.0	1.5	1.3	1.1	1.5	1.3	1.1	1.6	1.3	1.1	1.6	1.3	1.1	1.6	1.4	1.1	1.6	1.4	1.1	1.7	1.4	1.1	1.4	1.3	1.0	52.0
56.0	1.4	1.2		1.3	1.2		1.4	1.2		1.4	1.2		1.5	1.3	1.1	1.5	1.3	1.1	1.5	1.3	1.1	1.2	1.2	1.0	56.0
60.0	1.3	1.1		1.2	1.1		1.3	1.2		1.3	1.2		1.4	1.2		1.3	1.2		1.4	1.2	1.1	1.0	1.0	0.9	60.0
64.0	1.2	1.1		1.1	1.1		1.2	1.1		1.2	1.1		1.3	1.1		1.2	1.1		1.3	1.2		0.9	0.9		64.0
68.0	1.1			1.0						1.1				1.1		1.1	1.1		1.1	1.1			0.8		68.0
72.0										1.0						1.0									72.0
% 1	92	92	92	0	0	0	92	92	92	46	46	46	92	92	92	46	46	46	92	92	92	100	100	100	1
% 2	92	92	92	46	46	46	92	92	92	92	92	92	92	92	92	92	92	92	92	92	92	100	100	100	2
% 3	46	46	46	92	92	92	92	92	92	92	92	92	92	92	92	92	92	92	92	92	92	100	100	100	3
% 4	46	46	46	92	92	92	46	46	46	92	92	92	92	92	92	92	92	92	92	92	92	100	100	100	4
% 5	46	46	46	92	92	92	46	46	46	46	46	46	46	46	46	92	92	92	92	92	92	100	100	100	5
ID	42	42	42	21	21	21	38	38	38	31	31	31	32	32	32	23	23	23	24	24	24	16	16	16	ID
[DEG]	27~81	40~85	60~85	28~81	40~85	61~85	40~81	46~85	64~85	28~81	46~85	64~85	46~81	46~85	63~85	36~81	46~85	63~85	46~81	51~85	62~85	53~81	54~85	65~85	[DEG]
	1	1	1	1	1	1	1	1	1	1	1	1	1	1	1	1	1	1	1	1	1	1	1	1	
	8.7t	8.7t	8.7t	8.7t	8.7t	8.7t	8.7t	8.7t	8.7t	8.7t	8.7t	8.7t	8.7t	8.7t	8.7t	8.7t	8.7t	8.7t	8.7t	8.7t	8.7t	8.7t	8.7t	8.7t	

HLJ	1.0m + 2.8m	40.9 t	8.0m x 6.2m	360 °	JPN

m	12.8	12.8	12.8	25.8	25.8	25.8	25.8	25.8	25.8	30.1	30.1	30.1	30.1	30.1	30.1	34.4	34.4	34.4	34.4	34.4	34.4	34.4	34.4	34.4	m
°	5	20	40	5	20	40	5	20	40	5	20	40	5	20	40	5	20	40	5	20	40	5	20	40	°
3.0		31.6	25.3																						3.0
3.5	38.1	30.3	24.6		31.4			25.0																	3.5
4.0	36.1	29.1	23.9		30.6	23.4		24.2						31.2											4.0
4.5	34.3	28.0	23.3		29.8	23.1		23.3	21.5		30.2			30.4											4.5
5.0	32.7	27.0	22.8		29.0	22.7		22.4	20.6		29.5	22.8		29.8	22.9		29.9			24.9			16.9		5.0
6.0	29.9	25.3	21.8		27.7	22.0		20.5	19.0		28.3	22.2		28.5	22.3		28.9	22.5		24.9	23.0		16.9	16.9	6.0
7.0	27.7	23.8	20.9		26.5	21.3		18.9	17.7		27.1	21.6		27.4	21.7		27.9	22.0		24.9	22.4		16.9	16.9	7.0
8.0	25.7	22.6	20.2	32.0	25.4	20.8	18.6	17.5	16.5		26.1	21.1		26.3	21.2		26.9	21.5		24.3	21.9		16.9	16.7	8.0
9.0	24.1	21.5		30.3	24.4	20.2	17.3	16.3	15.5	32.0	25.2	20.6	32.2	25.4	20.7		26.0	21.0		23.1	20.9		16.2	15.9	9.0
10.0	22.7	20.6		28.7	23.5	19.7	16.1	15.3	14.6	30.1	24.3	20.2	30.7	24.5	20.2		25.2	20.6	24.4	22.1	20.1		15.3	14.9	10.0
11.0	21.5	19.9		27.4	22.7	19.3	15.1	14.4	13.7	28.0	23.6	19.8	29.4	23.7	19.8	26.1	24.4	20.2	23.2	21.1	19.3	14.8	14.4	14.0	11.0
12.0	20.6	19.3		26.2	21.9	18.9	14.2	13.6	13.0	26.1	22.8	19.4	28.1	23.0	19.4	24.4	23.7	19.8	22.1	20.2	18.6	13.9	13.5	13.2	12.0
14.0				24.0	20.6	18.2	12.6	12.2	11.8	23.0	21.6	18.7	24.9	21.7	18.7	21.5	21.2	19.1	20.3	18.7	17.4	12.3	12.1	11.8	14.0
16.0				19.6	19.5	17.7	11.4	11.1	10.8	19.1	19.4	18.1	20.1	20.3	18.2	19.2	18.9	18.6	18.7	17.4	16.3	11.1	10.9	10.6	16.0
18.0				16.1	16.3		10.3	10.0		15.6	15.8	16.0	16.6	16.8	16.9	16.1	16.3	16.5	17.2	16.3	15.4	9.9	9.8	9.7	18.0
20.0				13.5	13.6		9.3	9.2		13.0	13.1		13.9	14.1		13.4	13.6	13.7	14.5	14.7	14.6	8.9	8.8	8.8	20.0
22.0				11.4	11.5		8.5	8.4		10.9	11.0		11.8	11.9		11.3	11.5		12.4	12.5		8.1	8.0		22.0
24.0				9.7			7.9			9.2	9.3		10.1	10.2		9.6	9.8		10.7	10.8		7.4	7.3		24.0
26.0										7.8	7.9		8.7	8.8		8.2	8.3		9.3	9.4		6.8	6.7		26.0
28.0										6.7			7.6			7.1	7.2		8.1	8.2		6.2	6.2		28.0
30.0																6.1			7.1			5.8			30.0
32.0																5.2			6.2			5.4			32.0
34.0																									34.0
36.0																									36.0
38.0																									38.0
40.0																									40.0
44.0																									44.0
48.0																									48.0
52.0																									52.0
56.0																									56.0
60.0																									60.0
64.0																									64.0
68.0																									68.0
72.0																									72.0
1	0	0	0	46	46	46	0	0	0	92	92	92	46	46	46	92	92	92	46	46	46	0	0	0	1
2	0	0	0	46	46	46	0	0	0	46	46	46	46	46	46	46	46	46	46	46	46	0	0	0	2
3	0	0	0	46	46	46	0	0	0	46	46	46	46	46	46	46	46	46	46	46	46	46	46	46	3
4	0	0	0	0	0	0	46	46	46	0	0	0	46	46	46	46	46	46	46	46	46	92	92	92	4
5	0	0	0	0	0	0	92	92	92	0	0	0	0	0	0	0	0	0	46	46	46	92	92	92	5
ID	1	1	1	66	66	66	17	17	17	67	67	67	54	54	54	55	55	55	49	49	49	19	19	19	ID
[DEG]	0~76	34~85	58~85	29~76	38~85	56~85	29~76	38~85	57~85	29~76	37~85	58~85	29~76	37~85	58~85	28~76	41~85	59~85	28~76	41~85	59~85	29~76	41~85	59~85	[DEG]
	5	5	5	4	4	4	3	3	3	4	4	4	4	4	4	4	4	4	3	3	3	2	2	2	
	60t	60t	60t	60t	60t	60t	26t	26t	26t	60t	60t	60t	60t	60t	60t	60t	60t	60t	26t	26t	26t	26t	26t	26t	

m	43.0	43.0	43.0	43.0	43.0	43.0	47.4	47.4	47.4	47.4	47.4	47.4	51.7	51.7	51.7	51.7	51.7	51.7	56.0	56.0	56.0	60.0	60.0	60.0	m
°	5	20	40	5	20	40	5	20	40	5	20	40	5	20	40	5	20	40	5	20	40	5	20	40	°
3.0																									3.0
3.5																									3.5
4.0																									4.0
4.5																									4.5
5.0																									5.0
6.0																									6.0
7.0		17.1	17.1		12.1	12.1		13.9			12.4														7.0
8.0		17.1	17.1		12.1	12.1		13.9	13.9		12.4	12.4		11.1			9.8								8.0
9.0		17.1	17.1		12.1	12.1		13.9	13.9		12.4	12.4		11.1	11.1		9.8	9.8		9.0	9.0		7.8		9.0
10.0		17.1	17.1		12.1	12.1		13.9	13.9		12.4	12.4		11.1	11.1		9.8	9.8		9.0	9.0		7.8	7.8	10.0
11.0		17.1	17.1		12.1	12.1		13.9	13.9		12.4	12.4		11.1	11.1		9.8	9.8		9.0	9.0		7.8	7.8	11.0
12.0		17.1	17.1		12.1	12.1		13.9	13.9		12.4	12.4		11.1	11.1		9.8	9.8		9.0	9.0		7.8	7.8	12.0
14.0	17.1	17.1	17.1	12.1	12.1	12.1		13.9	13.9		12.4	12.4		11.1	11.1		9.8	9.8		9.0	9.0		7.8	7.8	14.0
16.0	17.1	17.1	16.8	11.5	11.4	11.2	13.9	13.9	13.9	12.4	12.4	12.4	11.1	11.1	11.1	9.8	9.8	9.8		9.0	9.0		7.8	7.8	16.0
18.0	15.6	15.5	15.4	10.4	10.3	10.2	13.9	13.9	13.7	12.4	12.1	11.8	11.1	11.1	11.1	9.8	9.8	9.8	9.0	9.0	9.0		7.8	7.8	18.0
20.0	14.0	14.1	14.0	9.5	9.4	9.3	13.3	13.0	12.7	11.4	11.1	10.9	11.1	11.1	11.1	9.8	9.8	9.8	9.0	9.0	9.0	7.8	7.8	7.8	20.0
22.0	11.9	12.0	12.2	8.7	8.6	8.5	12.0	12.1	11.9	10.5	10.3	10.1	10.9	10.7	10.5	9.5	9.4	9.3	9.0	9.0	9.0	7.8	7.8	7.8	22.0
24.0	10.2	10.3	10.4	8.0	7.9	7.8	10.3	10.4	10.5	9.7	9.6	9.4	10.2	10.0	9.8	8.9	8.7	8.6	9.0	9.0	8.9	7.6	7.4	7.3	24.0
26.0	8.8	8.9	9.0	7.4	7.3	7.3	8.9	9.0	9.1	9.1	8.9	8.8	9.1	9.2	9.2	8.2	8.1	8.0	8.6	8.4	8.3	7.1	6.9	6.8	26.0
28.0	7.6	7.7		6.8	6.8		7.7	7.8	7.9	8.3	8.4	8.3	7.9	8.0	8.1	7.7	7.6	7.5	8.0	7.9	7.8	6.6	6.5	6.4	28.0
30.0	6.6	6.7		6.4	6.3		6.7	6.8		7.3	7.4		6.9	7.0	7.1	7.2	7.1	7.1	7.2	7.3	7.3	6.2	6.1	6.0	30.0
32.0	5.7	5.8		6.0	5.9		5.8	5.9		6.4	6.5		6.0	6.1		6.7	6.7		6.3	6.4	6.4	5.8	5.7	5.7	32.0
34.0	5.0	5.0		5.5	5.5		5.1	5.1		5.7	5.7		5.3	5.3		5.9	6.0		5.5	5.6		5.5	5.4	5.4	34.0
36.0	4.3	4.4		5.1	5.2		4.4	4.5		5.0	5.0		4.6	4.7		5.2	5.3		4.9	4.9		4.9	4.9		36.0
38.0	3.7			4.8			3.8	3.9		4.4	4.4		4.0	4.1		4.7	4.7		4.3	4.3		4.3	4.3		38.0
40.0	3.1			4.5			3.3	3.3		3.9	3.9		3.5	3.5		4.1	4.2		3.8	3.8		3.7	3.8		40.0
44.0							2.3			3.0			2.5			3.2			2.8	2.9		2.8	2.8		44.0
48.0													1.8			2.5			2.0			2.0	2.1		48.0
52.0																			1.4			1.4			52.0
56.0																									56.0
60.0																									60.0
64.0																									64.0
68.0																									68.0
72.0																									72.0
1	92	92	92	0	0	0	92	92	92	46	46	46	92	92	92	46	46	46	92	92	92	100	100	100	1
2	92	92	92	46	46	46	92	92	92	92	92	92	92	92	92	92	92	92	92	92	92	100	100	100	2
3	46	46	46	92	92	92	92	92	92	92	92	92	92	92	92	92	92	92	92	92	92	100	100	100	3
4	46	46	46	92	92	92	46	46	46	92	92	92	92	92	92	92	92	92	92	92	92	100	100	100	4
5	46	46	46	92	92	92	46	46	46	46	46	46	46	46	46	92	92	92	92	92	92	100	100	100	5
ID	42	42	42	21	21	21	38	38	38	31	31	31	32	32	32	23	23	23	24	24	24	16	16	16	ID
[DEG]	28~76	39~85	58~85	29~76	40~85	58~85	28~76	39~85	59~85	28~76	39~85	59~85	29~76	45~85	60~85	29~76	45~85	60~85	29~76	45~85	61~85	36~76	44~85	62~85	[DEG]
	2	2	2	2	2	2	2	2	2	2	2	2	2	2	2	2	2	2	2	2	2	2	2	2	
	26t	26t	26t	26t	26t	26t	26t	26t	26t	26t	26t	26t	26t	26t	26t	26t	26t	26t	26t	26t	26t	26t	26t	26t	

油圧チルトジブ

HLJ	1.0m + 9.2m	40.9 t	8.0m x 6.2m	360 °	JPN

m	12.8	12.8	12.8	25.8	25.8	25.8	25.8	25.8	25.8	30.1	30.1	30.1	30.1	30.1	30.1	34.4	34.4	34.4	34.4	34.4	34.4	34.4	34.4	34.4	m
°	5	20	40	5	20	40	5	20	40	5	20	40	5	20	40	5	20	40	5	20	40	5	20	40	°
3.0																									3.0
3.5																									3.5
4.0	15.0																								4.0
4.5	15.0																								4.5
5.0	15.0	13.5																							5.0
6.0	15.0	12.4			14.4			14.1																	6.0
7.0	14.8	11.4	8.9	15.0	13.5		14.3	13.3			13.6			13.8			13.8			13.4					7.0
8.0	13.4	10.6	8.4	15.0	12.8		14.3	12.5		15.0	12.9		15.0	13.1			13.2			13.3			10.1		8.0
9.0	12.2	9.9	8.0	15.0	12.1	8.7	14.0	11.9	8.6	15.0	12.3	8.8	15.0	12.5	8.8	15.0	12.6		13.4	12.7			10.1		9.0
10.0	11.2	9.2	7.6	15.0	11.5	8.4	13.2	11.3	8.4	15.0	11.8	8.5	15.0	11.9	8.6	15.0	12.1	8.6	13.4	12.2	8.6	10.1	10.1		10.0
11.0	10.4	8.7	7.3	15.0	10.9	8.2	12.5	10.8	8.1	15.0	11.3	8.3	15.0	11.4	8.3	15.0	11.6	8.4	13.4	11.7	8.4	10.1	10.1	8.3	11.0
12.0	9.6	8.2	7.0	14.2	10.4	7.9	11.7	10.3	7.9	15.0	10.8	8.1	15.0	10.9	8.1	15.0	11.1	8.2	13.4	11.2	8.2	10.1	10.1	8.1	12.0
14.0	8.4	7.4	6.5	12.6	9.6	7.5	10.3	9.4	7.4	13.5	10.0	7.7	13.7	10.1	7.7	14.4	10.3	7.8	13.4	10.4	7.8	10.1	9.9	7.8	14.0
16.0	7.5	6.8		11.3	8.9	7.1	9.1	8.4	7.1	12.2	9.3	7.3	12.3	9.3	7.3	13.1	9.7	7.5	13.2	9.7	7.5	9.7	9.2	7.4	16.0
18.0	6.8			10.2	8.3	6.8	8.1	7.6	6.8	11.1	8.7	7.0	11.2	8.7	7.0	11.9	9.1	7.2	12.0	9.1	7.2	8.7	8.4	7.1	18.0
20.0				9.3	7.7	6.5	7.3	6.9	6.5	10.2	8.2	6.7	10.2	8.2	6.8	11.0	8.6	6.9	11.0	8.6	6.9	7.8	7.6	6.9	20.0
22.0				8.6	7.3	6.3	6.7	6.3	6.1	9.4	7.7	6.5	9.4	7.8	6.5	10.1	8.1	6.7	10.2	8.2	6.7	7.1	6.9	6.7	22.0
24.0				8.0	6.9		6.1	5.8		8.7	7.3	6.3	8.8	7.4	6.3	9.4	7.7	6.5	9.5	7.7	6.5	6.4	6.3	6.2	24.0
26.0				7.4	6.6		5.6	5.4		8.1	7.0		8.2	7.0		8.8	7.4	6.3	8.9	7.4	6.3	5.9	5.8	5.7	26.0
28.0				7.0	6.3		5.2	5.0		7.6	6.7		7.7	6.7		7.8	7.0		8.3	7.1		5.4	5.3		28.0
30.0				6.6			4.8			6.6	6.4		7.2	6.4		6.8	6.8		7.6	6.8		5.0	4.9		30.0
32.0										5.7	5.9		6.5	6.2		5.9	6.2		6.8	6.5		4.6	4.6		32.0
34.0										5.0			5.7			5.2	5.4		6.0	6.2		4.3	4.3		34.0
36.0																4.5			5.3			4.0			36.0
38.0																4.0			4.8			3.7			38.0
40.0																									40.0
44.0																									44.0
48.0																									48.0
52.0																									52.0
56.0																									56.0
60.0																									60.0
64.0																									64.0
68.0																									68.0
72.0																									72.0
1	0	0	0	46	46	46	0	0	0	92	92	92	46	46	46	92	92	92	46	46	46	0	0	0	1
2	0	0	0	46	46	46	0	0	0	46	46	46	46	46	46	46	46	46	46	46	46	0	0	0	2
3	0	0	0	46	46	46	0	0	0	46	46	46	46	46	46	46	46	46	46	46	46	46	46	46	3
4	0	0	0	0	0	0	46	46	46	0	0	0	46	46	46	46	46	46	46	46	46	92	92	92	4
5	0	0	0	0	0	0	92	92	92	0	0	0	0	0	0	0	0	0	46	46	46	92	92	92	5
ID	1	1	1	66	66	66	17	17	17	67	67	67	54	54	54	55	55	55	49	49	49	19	19	19	ID
[DEG]	0~79	44~85	57~85	27~79	37~85	56~85	28~79	38~85	57~85	27~79	37~85	58~85	27~79	37~85	57~85	27~79	40~85	58~85	27~79	41~85	59~85	28~79	41~85	59~85	[DEG]
	2	2	2	2	2	2	2	2	2	2	2	2	2	2	2	2	2	2	2	2	2	2	2	2	
	26t	26t	26t	26t	26t	26t	26t	26t	26t	26t	26t	26t	26t	26t	26t	26t	26t	26t	26t	26t	26t	26t	26t	26t	

m	43.0	43.0	43.0	43.0	43.0	43.0	47.4	47.4	47.4	47.4	47.4	47.4	51.7	51.7	51.7	51.7	51.7	51.7	56.0	56.0	56.0	60.0	60.0	60.0	m
°	5	20	40	5	20	40	5	20	40	5	20	40	5	20	40	5	20	40	5	20	40	5	20	40	°
3.0																									3.0
3.5																									3.5
4.0																									4.0
4.5																									4.5
5.0																									5.0
6.0																									6.0
7.0																									7.0
8.0																									8.0
9.0		10.6			7.2																				9.0
10.0		10.6			7.2			8.4			7.5														10.0
11.0		10.6			7.2			8.4			7.5			7.0			6.4			6.4					11.0
12.0	10.6	10.6	8.3	7.2	7.2	7.2		8.4			7.5			7.0			6.4			6.4			5.7		12.0
14.0	10.6	10.6	7.9	7.2	7.2	7.2	8.4	8.4	8.0	7.5	7.5	7.5		7.0	7.0	6.4	6.4	6.4		6.4			5.7		14.0
16.0	10.6	10.2	7.6	7.2	7.2	7.2	8.4	8.4	7.7	7.5	7.5	7.5	7.0	7.0	7.0	6.4	6.4	6.4	6.4	6.4	6.4		5.7	5.7	16.0
18.0	10.6	9.6	7.4	7.2	7.2	7.2	8.4	8.4	7.4	7.5	7.5	7.5	7.0	7.0	7.0	6.4	6.4	6.4	6.4	6.4	6.4	5.7	5.7	5.7	18.0
20.0	10.6	9.2	7.1	7.2	7.2	7.1	8.4	8.4	7.2	7.5	7.5	7.2	7.0	7.0	7.0	6.4	6.4	6.4	6.4	6.4	6.4	5.7	5.7	5.7	20.0
22.0	10.6	8.7	6.9	7.2	7.2	6.9	8.4	8.4	7.0	7.5	7.5	7.0	7.0	7.0	7.0	6.4	6.4	6.4	6.4	6.4	6.4	5.7	5.7	5.7	22.0
24.0	10.5	8.3	6.7	7.2	7.0	6.7	8.4	8.4	6.8	7.5	7.5	6.8	7.0	7.0	6.9	6.4	6.4	6.4	6.4	6.4	6.4	5.7	5.7	5.5	24.0
26.0	9.1	8.0	6.6	6.8	6.6	6.4	8.4	8.2	6.6	7.5	7.5	6.7	7.0	7.0	6.7	6.4	6.4	6.4	6.4	6.4	6.4	5.5	5.4	5.2	26.0
28.0	8.0	7.6	6.4	6.3	6.2	6.0	8.1	7.9	6.5	7.5	7.4	6.5	7.0	7.0	6.6	6.4	6.4	6.2	6.4	6.4	6.2	5.4	5.1	4.9	28.0
30.0	6.9	7.3	6.3	5.8	5.7	5.6	7.1	7.5	6.3	7.2	6.9	6.3	7.0	7.0	6.4	6.4	6.1	5.9	6.4	6.2	5.9	5.0	4.8	4.6	30.0
32.0	6.1	6.4	6.2	5.3	5.3	5.3	6.2	6.6	6.2	6.7	6.5	6.2	6.4	6.7	6.3	6.1	5.8	5.7	6.2	5.9	5.7	4.7	4.5	4.3	32.0
34.0	5.3	5.6		4.9	4.9		5.5	5.8	6.1	6.0	6.2	6.0	5.6	5.9	6.2	5.8	5.6	5.4	5.8	5.7	5.5	4.4	4.2	4.1	34.0
36.0	4.7	4.9		4.6	4.6		4.8	5.1		5.3	5.6		5.0	5.2	5.5	5.4	5.4	5.2	5.2	5.4	5.3	4.1	4.0	3.9	36.0
38.0	4.1	4.3		4.2	4.3		4.2	4.5		4.8	5.0		4.4	4.6		4.9	5.0		4.6	4.8	5.0	3.9	3.7	3.7	38.0
40.0	3.6	3.8		3.9	4.0		3.7	3.9		4.2	4.4		3.8	4.1		4.4	4.6		4.0	4.3		3.7	3.5	3.5	40.0
44.0	2.6			3.4			2.8	3.0		3.3	3.5		2.9	3.1		3.5	3.7		3.1	3.3		3.1	3.2		44.0
48.0				3.0			1.9			2.5			2.1	2.2		2.8	2.9		2.3	2.5		2.3	2.5		48.0
52.0							1.2			1.8			1.3			2.0			1.6	1.7		1.5	1.7		52.0
56.0																1.4			1.0				1.1		56.0
60.0																									60.0
64.0																									64.0
68.0																									68.0
72.0																									72.0
1	92	92	92	0	0	0	92	92	92	46	46	46	92	92	92	46	46	46	92	92	92	100	100	100	1
2	92	92	92	46	46	46	92	92	92	92	92	92	92	92	92	92	92	92	92	92	92	100	100	100	2
3	46	46	46	92	92	92	92	92	92	92	92	92	92	92	92	92	92	92	92	92	92	100	100	100	3
4	46	46	46	92	92	92	46	46	46	92	92	92	92	92	92	92	92	92	92	92	92	100	100	100	4
5	46	46	46	92	92	92	46	46	46	46	46	46	46	46	46	92	92	92	92	92	92	100	100	100	5
ID	42	42	42	21	21	21	38	38	38	31	31	31	32	32	32	23	23	23	24	24	24	16	16	16	ID
[DEG]	33~79	43~85	58~85	22~79	44~85	58~85	22~79	42~85	60~85	22~79	42~85	60~85	33~79	42~85	61~85	23~79	42~85	61~85	33~79	41~85	62~85	45~79	40~85	62~85	[DEG]
	2	2	2	1	1	1	1	1	1	1	1	1	1	1	1	1	1	1	1	1	1	1	1	1	
	26t	26t	26t	8.7t	8.7t	8.7t	8.7t	8.7t	8.7t	8.7t	8.7t	8.7t	8.7t	8.7t	8.7t	8.7t	8.7t	8.7t	8.7t	8.7t	8.7t	8.7t	8.7t	8.7t	

HLJ	1.0m + 17.0m	40.9 t	8.0m x 6.2m	360 °	JPN

m	12.8	12.8	12.8	25.8	25.8	25.8	25.8	25.8	25.8	30.1	30.1	30.1	30.1	30.1	30.1	34.4	34.4	34.4	34.4	34.4	34.4	34.4	34.4	34.4	m
°	5	20	40	5	20	40	5	20	40	5	20	40	5	20	40	5	20	40	5	20	40	5	20	40	°
3.0																									3.0
3.5																									3.5
4.0																									4.0
4.5																									4.5
5.0																									5.0
6.0	7.3																								6.0
7.0	6.8																								7.0
8.0	6.4	5.4		7.0			5.6																		8.0
9.0	6.0	5.1		6.7			5.6			6.7			6.5												9.0
10.0	5.7	4.8		6.4	5.0		5.6	4.8		6.5			6.3			6.3			5.9			4.6			10.0
11.0	5.3	4.6		6.1	4.8		5.6	4.6		6.2	4.9		6.1	4.8		6.1	4.8		5.9	4.7		4.6			11.0
12.0	5.1	4.4		5.8	4.7		5.5	4.5		6.0	4.7		5.9	4.6		5.9	4.7		5.7	4.6		4.6	4.4		12.0
14.0	4.6	4.0	3.5	5.4	4.4		5.1	4.2		5.5	4.4		5.4	4.4		5.5	4.4		5.4	4.3		4.6	4.2		14.0
16.0	4.2	3.7	3.3	5.0	4.1	3.4	4.8	3.9	3.3	5.1	4.2	3.4	5.1	4.1	3.4	5.2	4.2	3.4	5.1	4.1		4.6	4.0		16.0
18.0	3.8	3.4	3.1	4.6	3.9	3.3	4.4	3.7	3.2	4.8	3.9	3.3	4.8	3.9	3.3	4.9	3.9	3.3	4.8	3.9	3.2	4.6	3.8	3.2	18.0
20.0	3.5	3.2	3.0	4.3	3.7	3.1	4.2	3.5	3.1	4.5	3.7	3.2	4.5	3.7	3.2	4.6	3.8	3.2	4.5	3.7	3.1	4.3	3.6	3.1	20.0
22.0	3.3	3.1	2.9	4.1	3.5	3.0	3.9	3.4	3.0	4.3	3.6	3.1	4.2	3.5	3.0	4.3	3.6	3.1	4.3	3.5	3.0	4.1	3.5	3.0	22.0
24.0	3.1	2.9		3.8	3.3	2.9	3.7	3.2	2.9	4.0	3.4	3.0	4.0	3.4	2.9	4.1	3.5	3.0	4.0	3.4	2.9	3.9	3.3	2.9	24.0
26.0	3.0			3.6	3.2	2.9	3.5	3.1	2.8	3.8	3.3	2.9	3.8	3.2	2.9	3.9	3.3	2.9	3.8	3.3	2.9	3.7	3.2	2.8	26.0
28.0				3.5	3.1	2.8	3.4	3.0	2.7	3.6	3.2	2.8	3.6	3.1	2.8	3.7	3.2	2.8	3.7	3.2	2.8	3.6	3.1	2.7	28.0
30.0				3.3	3.0		3.2	2.9		3.5	3.0	2.8	3.4	3.0	2.7	3.6	3.1	2.8	3.5	3.1	2.7	3.4	3.0	2.7	30.0
32.0				3.2	2.9		3.1	2.8		3.3	2.9	2.7	3.3	2.9	2.7	3.4	3.0	2.7	3.4	3.0	2.7	3.3	2.9	2.6	32.0
34.0				3.0	2.8		3.0	2.7		3.2	2.9		3.2	2.8		3.3	2.9	2.7	3.3	2.9	2.6	3.2	2.8	2.6	34.0
36.0				2.9	2.7		2.9	2.7		3.1	2.8		3.1	2.8		3.2	2.8		3.1	2.8		3.1	2.7		36.0
38.0				2.9			2.8			3.0	2.7		3.0	2.7		3.1	2.8		3.0	2.7		3.0	2.7		38.0
40.0										2.9			2.9			3.0	2.7		2.9	2.7		2.9	2.6		40.0
44.0																2.8			2.8			2.6			44.0
48.0																									48.0
52.0																									52.0
56.0																									56.0
60.0																									60.0
64.0																									64.0
68.0																									68.0
72.0																									72.0
1	0	0	0	46	46	46	0	0	0	92	92	92	46	46	46	92	92	92	46	46	46	0	0	0	1
2	0	0	0	46	46	46	0	0	0	46	46	46	46	46	46	46	46	46	46	46	46	0	0	0	2
3	0	0	0	46	46	46	0	0	0	46	46	46	46	46	46	46	46	46	46	46	46	46	46	46	3
4	0	0	0	0	0	0	46	46	46	0	0	0	46	46	46	46	46	46	46	46	46	92	92	92	4
5	0	0	0	0	0	0	92	92	92	0	0	0	0	0	0	0	0	0	46	46	46	92	92	92	5
ID	1	1	1	66	66	66	17	17	17	67	67	67	54	54	54	55	55	55	49	49	49	19	19	19	ID
[DEG]	0~81	41~85	56~85	25~81	36~85	59~85	26~81	37~85	60~85	31~81	40~85	57~85	31~81	40~85	57~85	31~81	43~85	58~85	32~81	44~85	58~85	32~81	44~85	58~85	[DEG]
	1	1	1	1	1	1	1	1	1	1	1	1	1	1	1	1	1	1	1	1	1	1	1	1	
	8.7t	8.7t	8.7t	8.7t	8.7t	8.7t	8.7t	8.7t	8.7t	8.7t	8.7t	8.7t	8.7t	8.7t	8.7t	8.7t	8.7t	8.7t	8.7t	8.7t	8.7t	8.7t	8.7t	8.7t	

m	43.0	43.0	43.0	43.0	43.0	43.0	47.4	47.4	47.4	47.4	47.4	47.4	51.7	51.7	51.7	51.7	51.7	51.7	56.0	56.0	56.0	60.0	60.0	60.0	m
°	5	20	40	5	20	40	5	20	40	5	20	40	5	20	40	5	20	40	5	20	40	5	20	40	°
3.0																									3.0
3.5																									3.5
4.0																									4.0
4.5																									4.5
5.0																									5.0
6.0																									6.0
7.0																									7.0
8.0																									8.0
9.0																									9.0
10.0																									10.0
11.0																									11.0
12.0	5.5			4.1																					12.0
14.0	5.4	4.3		4.1	4.1		4.7	4.2		4.3	4.2		4.1			3.9									14.0
16.0	5.1	4.1		4.1	3.9		4.7	4.1		4.3	4.0		4.1	4.0		3.9	3.9		3.9	3.8		3.6	3.6		16.0
18.0	4.8	3.9	3.2	4.1	3.8		4.7	3.9		4.3	3.8		4.1	3.8		3.9	3.7		3.9	3.7		3.6	3.6		18.0
20.0	4.6	3.8	3.1	4.1	3.6	3.1	4.6	3.7	3.1	4.3	3.7	3.1	4.1	3.7	3.1	3.9	3.6	3.0	3.9	3.6		3.6	3.5		20.0
22.0	4.4	3.6	3.0	4.1	3.5	3.0	4.4	3.6	3.0	4.3	3.5	3.0	4.1	3.5	3.0	3.9	3.5	2.9	3.9	3.5	2.9	3.6	3.4	2.9	22.0
24.0	4.2	3.5	3.0	4.0	3.3	2.9	4.2	3.5	2.9	4.1	3.4	2.9	4.1	3.4	2.9	3.9	3.4	2.9	3.9	3.3	2.9	3.6	3.3	2.8	24.0
26.0	4.0	3.3	2.9	3.8	3.2	2.8	4.0	3.3	2.9	3.9	3.3	2.8	4.0	3.3	2.8	3.8	3.2	2.8	3.8	3.2	2.8	3.6	3.2	2.8	26.0
28.0	3.8	3.2	2.8	3.7	3.1	2.7	3.9	3.2	2.8	3.8	3.2	2.8	3.8	3.2	2.8	3.7	3.1	2.7	3.7	3.1	2.7	3.6	3.1	2.7	28.0
30.0	3.7	3.1	2.8	3.5	3.0	2.7	3.7	3.1	2.7	3.6	3.1	2.7	3.7	3.1	2.7	3.6	3.1	2.7	3.6	3.1	2.7	3.5	3.0	2.6	30.0
32.0	3.5	3.0	2.7	3.4	2.9	2.6	3.6	3.0	2.7	3.5	3.0	2.7	3.5	3.0	2.7	3.5	3.0	2.6	3.5	3.0	2.6	3.4	2.9	2.6	32.0
34.0	3.4	2.9	2.6	3.3	2.9	2.6	3.5	3.0	2.6	3.4	2.9	2.6	3.4	2.9	2.6	3.4	2.9	2.6	3.4	2.9	2.6	3.3	2.9	2.5	34.0
36.0	3.3	2.9	2.6	3.2	2.8	2.5	3.3	2.9	2.6	3.3	2.8	2.6	3.3	2.9	2.6	3.3	2.8	2.5	3.3	2.8	2.5	3.2	2.8	2.5	36.0
38.0	3.2	2.8	2.6	3.1	2.7	2.5	3.2	2.8	2.5	3.2	2.8	2.5	3.2	2.8	2.5	3.2	2.7	2.5	3.2	2.8	2.5	3.2	2.7	2.5	38.0
40.0	3.1	2.7		3.0	2.6		3.1	2.7	2.5	3.1	2.7	2.5	3.1	2.7	2.5	3.1	2.7	2.4	3.1	2.7	2.4	3.0	2.7	2.4	40.0
44.0	2.9	2.6		2.8	2.5		3.0	2.6		2.9	2.6		3.0	2.6	2.4	2.9	2.6	2.4	2.9	2.6	2.4	2.7	2.5	2.3	44.0
48.0	2.5	2.5		2.7	2.5		2.5	2.5		2.8	2.5		2.5	2.5		2.8	2.5		2.7	2.5		2.4	2.3	2.3	48.0
52.0	1.8			2.4			1.8	2.0		2.3	2.4		1.9	2.1		2.4	2.4		2.0	2.3		1.9	2.1		52.0
56.0							1.2			1.7			1.3	1.5		1.8	2.0		1.4	1.7		1.4	1.6		56.0
60.0																1.3				1.1			1.1		60.0
64.0																									64.0
68.0																									68.0
72.0																									72.0
1	92	92	92	0	0	0	92	92	92	46	46	46	92	92	92	46	46	46	92	92	92	100	100	100	1
2	92	92	92	46	46	46	92	92	92	92	92	92	92	92	92	92	92	92	92	92	92	100	100	100	2
3	46	46	46	92	92	92	92	92	92	92	92	92	92	92	92	92	92	92	92	92	92	100	100	100	3
4	46	46	46	92	92	92	46	46	46	92	92	92	92	92	92	92	92	92	92	92	92	100	100	100	4
5	46	46	46	92	92	92	46	46	46	46	46	46	46	46	46	92	92	92	92	92	92	100	100	100	5
ID	42	42	42	21	21	21	38	38	38	31	31	31	32	32	32	23	23	23	24	24	24	16	16	16	ID
[DEG]	31~81	42~85	60~85	32~81	43~85	60~85	31~81	42~85	61~85	32~81	42~85	61~85	39~81	41~85	60~85	32~81	42~85	60~85	44~81	41~85	63~85	48~81	46~85	62~85	[DEG]
	1	1	1	1	1	1	1	1	1	1	1	1	1	1	1	1	1	1	1	1	1	1	1	1	
	8.7t	8.7t	8.7t	8.7t	8.7t	8.7t	8.7t	8.7t	8.7t	8.7t	8.7t	8.7t	8.7t	8.7t	8.7t	8.7t	8.7t	8.7t	8.7t	8.7t	8.7t	8.7t	8.7t	8.7t	

油圧チルトジブ

HLJ	1.0m + 24.0m	40.9 t	8.0m x 6.2m	360 °	JPN

m	12.8	12.8	12.8	25.8	25.8	25.8	25.8	25.8	25.8	30.1	30.1	30.1	30.1	30.1	30.1	34.4	34.4	34.4	34.4	34.4	34.4	34.4	34.4	34.4	m
°	5	20	40	5	20	40	5	20	40	5	20	40	5	20	40	5	20	40	5	20	40	5	20	40	°
3.0																									3.0
3.5																									3.5
4.0																									4.0
4.5																									4.5
5.0																									5.0
6.0																									6.0
7.0																									7.0
8.0	5.1																								8.0
9.0	5.1																								9.0
10.0	5.1			4.9			3.7																		10.0
11.0	5.1			4.9			3.7			4.6			4.3												11.0
12.0	5.1	4.5		4.9			3.7			4.6			4.3			4.2			4.0			3.2			12.0
14.0	4.8	4.0		4.9	4.4		3.7	3.7		4.6	4.4		4.3	4.3		4.2			4.0			3.2			14.0
16.0	4.3	3.6		4.9	4.1		3.7	3.7		4.6	4.1		4.3	4.1		4.2	4.1		4.0	4.0		3.2	3.2		16.0
18.0	3.8	3.3		4.6	3.8		3.7	3.7		4.6	3.8		4.3	3.9		4.2	3.9		4.0	3.8		3.2	3.2		18.0
20.0	3.4	3.0	2.6	4.3	3.5		3.7	3.4		4.4	3.6		4.3	3.6		4.2	3.6		4.0	3.7		3.2	3.2		20.0
22.0	3.1	2.7	2.4	4.1	3.2	2.6	3.7	3.2	2.5	4.2	3.3	2.6	4.2	3.4	2.6	4.2	3.4	2.6	4.0	3.4		3.2	3.2		22.0
24.0	2.8	2.5	2.2	3.7	3.0	2.4	3.7	3.0	2.4	4.0	3.1	2.5	4.0	3.1	2.5	4.0	3.2	2.5	3.9	3.2	2.5	3.2	3.2	2.5	24.0
26.0	2.6	2.3	2.1	3.5	2.8	2.3	3.4	2.8	2.3	3.7	2.9	2.4	3.7	3.0	2.4	3.9	3.0	2.4	3.8	3.1	2.4	3.2	3.0	2.4	26.0
28.0	2.4	2.2	2.0	3.2	2.7	2.2	3.2	2.6	2.2	3.4	2.8	2.3	3.4	2.8	2.3	3.6	2.9	2.3	3.6	2.9	2.3	3.2	2.8	2.3	28.0
30.0	2.2	2.0		3.0	2.5	2.1	2.9	2.5	2.1	3.2	2.6	2.2	3.2	2.6	2.2	3.4	2.7	2.2	3.4	2.7	2.2	3.2	2.7	2.2	30.0
32.0	2.0	1.9		2.8	2.4	2.0	2.8	2.4	2.0	3.0	2.5	2.1	3.0	2.5	2.1	3.2	2.6	2.1	3.2	2.6	2.1	3.1	2.6	2.1	32.0
34.0				2.6	2.3	2.0	2.6	2.3	2.0	2.8	2.4	2.0	2.8	2.4	2.0	3.0	2.5	2.1	3.0	2.5	2.1	3.0	2.5	2.1	34.0
36.0				2.5	2.2	1.9	2.4	2.1	1.9	2.6	2.3	2.0	2.7	2.3	2.0	2.8	2.4	2.0	2.8	2.4	2.0	2.8	2.4	2.0	36.0
38.0				2.3	2.1		2.3	2.1		2.5	2.2	1.9	2.5	2.2	1.9	2.7	2.3	1.9	2.7	2.3	1.9	2.6	2.3	1.9	38.0
40.0				2.2	2.0		2.2	2.0		2.4	2.1		2.4	2.1		2.5	2.2	1.9	2.5	2.2	1.9	2.5	2.2	1.9	40.0
44.0				2.0			2.0			2.1	1.9		2.1	1.9		2.3	2.0		2.3	2.0		2.3	2.0		44.0
48.0										2.0			2.0			2.1	1.9		2.1	1.9		2.0	1.9		48.0
52.0																1.9			1.9			1.8			52.0
56.0																									56.0
60.0																									60.0
64.0																									64.0
68.0																									68.0
72.0																									72.0
% 1	0	0	0	46	46	46	0	0	0	92	92	92	46	46	46	92	92	92	46	46	46	0	0	0	1
% 2	0	0	0	46	46	46	0	0	0	46	46	46	46	46	46	46	46	46	46	46	46	0	0	0	2
% 3	0	0	0	46	46	46	0	0	0	46	46	46	46	46	46	46	46	46	46	46	46	46	46	46	3
% 4	0	0	0	0	0	0	46	46	46	0	0	0	46	46	46	46	46	46	46	46	46	92	92	92	4
% 5	0	0	0	0	0	0	92	92	92	0	0	0	0	0	0	0	0	0	46	46	46	92	92	92	5
ID	1	1	1	66	66	66	17	17	17	67	67	67	54	54	54	55	55	55	49	49	49	19	19	19	ID
[DEG]	0~81	37~85	59~85	28~81	44~85	57~85	29~81	45~85	58~85	29~81	43~85	59~85	29~81	43~85	59~85	29~81	42~85	59~85	29~81	42~85	59~85	30~81	43~85	60~85	[DEG]
	1	1	1	1	1	1	1	1	1	1	1	1	1	1	1	1	1	1	1	1	1	1	1	1	
	8.7t	8.7t	8.7t	8.7t	8.7t	8.7t	8.7t	8.7t	8.7t	8.7t	8.7t	8.7t	8.7t	8.7t	8.7t	8.7t	8.7t	8.7t	8.7t	8.7t	8.7t	8.7t	8.7t	8.7t	

m	43.0	43.0	43.0	43.0	43.0	43.0	47.4	47.4	47.4	47.4	47.4	47.4	51.7	51.7	51.7	51.7	51.7	51.7	56.0	56.0	56.0	60.0	60.0	60.0	m
°	5	20	40	5	20	40	5	20	40	5	20	40	5	20	40	5	20	40	5	20	40	5	20	40	°
3.0																									3.0
3.5																									3.5
4.0																									4.0
4.5																									4.5
5.0																									5.0
6.0																									6.0
7.0																									7.0
8.0																									8.0
9.0																									9.0
10.0																									10.0
11.0																									11.0
12.0																									12.0
14.0	3.8			2.9																					14.0
16.0	3.8			2.9			3.3			3.1			3.0			2.9									16.0
18.0	3.8	3.8		2.9	2.9		3.3	3.3		3.1	3.1		3.0	3.0		2.9			2.9						18.0
20.0	3.8	3.6		2.9	2.9		3.3	3.3		3.1	3.1		3.0	3.0		2.9	2.9		2.9	2.9		2.4			20.0
22.0	3.8	3.5		2.9	2.9		3.3	3.3		3.1	3.1		3.0	3.0		2.9	2.9		2.9	2.9		2.4	2.4		22.0
24.0	3.8	3.3	2.5	2.9	2.9		3.3	3.3		3.1	3.1		3.0	3.0		2.9	2.9		2.9	2.9		2.4	2.4		24.0
26.0	3.8	3.2	2.4	2.9	2.9	2.4	3.3	3.2	2.4	3.1	3.1	2.4	3.0	3.0		2.9	2.9		2.9	2.9		2.4	2.4		26.0
28.0	3.7	3.0	2.3	2.9	2.9	2.3	3.3	3.0	2.3	3.1	3.0	2.3	3.0	3.0	2.3	2.9	2.9	2.3	2.9	2.9	2.3	2.4	2.4		28.0
30.0	3.5	2.9	2.3	2.9	2.8	2.2	3.3	2.9	2.3	3.1	2.9	2.3	3.0	2.9	2.3	2.9	2.9	2.3	2.9	2.9	2.3	2.4	2.4	2.0	30.0
32.0	3.4	2.8	2.2	2.9	2.7	2.2	3.3	2.8	2.2	3.1	2.8	2.2	3.0	2.8	2.2	2.9	2.8	2.2	2.9	2.8	2.2	2.4	2.4	2.0	32.0
34.0	3.3	2.6	2.1	2.9	2.6	2.1	3.3	2.7	2.1	3.1	2.7	2.1	3.0	2.7	2.2	2.9	2.7	2.2	2.9	2.8	2.2	2.4	2.4	1.9	34.0
36.0	3.1	2.5	2.1	2.9	2.5	2.1	3.2	2.6	2.1	3.1	2.6	2.1	3.0	2.6	2.1	2.9	2.6	2.1	2.9	2.7	2.1	2.4	2.4	1.9	36.0
38.0	3.0	2.4	2.0	2.9	2.4	2.0	3.1	2.5	2.0	3.1	2.5	2.0	3.0	2.5	2.0	2.9	2.5	2.1	2.9	2.6	2.1	2.4	2.3	1.9	38.0
40.0	2.8	2.3	2.0	2.8	2.3	2.0	3.0	2.4	2.0	2.9	2.4	2.0	3.0	2.4	2.0	2.9	2.4	2.0	2.9	2.5	2.0	2.4	2.3	1.8	40.0
44.0	2.6	2.2	1.9	2.6	2.2	1.9	2.7	2.2	1.9	2.7	2.2	1.9	2.8	2.3	1.9	2.8	2.3	1.9	2.8	2.3	1.9	2.2	2.1	1.7	44.0
48.0	2.4	2.1		2.3	2.0		2.5	2.1	1.8	2.5	2.1	1.8	2.6	2.2	1.9	2.6	2.2	1.9	2.7	2.2	1.9	1.9	1.9	1.7	48.0
52.0	2.1	1.9		2.1	1.9		2.0	2.0		2.3	2.0		2.0	2.0		2.4	2.0		2.1	2.1	1.8	1.7	1.7	1.6	52.0
56.0	1.5	1.8		1.9	1.8		1.4	1.7		1.9	1.9		1.5	1.8		2.0	1.9		1.6	1.9		1.5	1.5	1.5	56.0
60.0				1.7				1.2		1.4	1.6			1.3		1.5	1.7		1.1	1.4			1.3		60.0
64.0																	1.2								64.0
68.0																									68.0
72.0																									72.0
% 1	92	92	92	0	0	0	92	92	92	46	46	46	92	92	92	46	46	46	92	92	92	100	100	100	1
% 2	92	92	92	46	46	46	92	92	92	92	92	92	92	92	92	92	92	92	92	92	92	100	100	100	2
% 3	46	46	46	92	92	92	92	92	92	92	92	92	92	92	92	92	92	92	92	92	92	100	100	100	3
% 4	46	46	46	92	92	92	46	46	46	92	92	92	92	92	92	92	92	92	92	92	92	100	100	100	4
% 5	46	46	46	92	92	92	46	46	46	46	46	46	46	46	46	92	92	92	92	92	92	100	100	100	5
ID	42	42	42	21	21	21	38	38	38	31	31	31	32	32	32	23	23	23	24	24	24	16	16	16	ID
[DEG]	37~81	41~85	61~85	31~81	42~85	62~85	43~81	40~85	60~85	37~81	41~85	60~85	48~81	46~85	64~85	43~81	40~85	64~85	47~81	51~85	62~85	55~81	55~85	61~85	[DEG]
	1	1	1	1	1	1	1	1	1	1	1	1	1	1	1	1	1	1	1	1	1	1	1	1	
	8.7t	8.7t	8.7t	8.7t	8.7t	8.7t	8.7t	8.7t	8.7t	8.7t	8.7t	8.7t	8.7t	8.7t	8.7t	8.7t	8.7t	8.7t	8.7t	8.7t	8.7t	8.7t	8.7t	8.7t	

HLJ	1.0m + 31.0m	40.9 t	8.0m x 6.2m	360 °	JPN

m	12.8	12.8	12.8	25.8	25.8	25.8	25.8	25.8	25.8	30.1	30.1	30.1	30.1	30.1	30.1	34.4	34.4	34.4	34.4	34.4	34.4	34.4	34.4	34.4	m
°	5	20	40	5	20	40	5	20	40	5	20	40	5	20	40	5	20	40	5	20	40	5	20	40	°
3.0																									3.0
3.5																									3.5
4.0																									4.0
4.5																									4.5
5.0																									5.0
6.0																									6.0
7.0																									7.0
8.0																									8.0
9.0																									9.0
10.0	3.5																								10.0
11.0	3.5																								11.0
12.0	3.5			3.3			2.6																		12.0
14.0	3.5			3.3			2.6			3.1			2.9			2.9			2.8			2.3			14.0
16.0	3.5	3.0		3.3			2.6			3.1			2.9			2.9			2.8			2.3			16.0
18.0	3.2	2.7		3.3	3.0		2.6	2.6		3.1	3.0		2.9	2.9		2.9			2.8			2.3			18.0
20.0	2.9	2.5		3.3	2.7		2.6	2.6		3.1	2.8		2.9	2.8		2.9	2.8		2.8	2.8		2.3	2.3		20.0
22.0	2.6	2.2		3.3	2.5		2.6	2.5		3.1	2.6		2.9	2.6		2.9	2.6		2.8	2.6		2.3	2.3		22.0
24.0	2.3	2.0	1.7	3.0	2.3		2.6	2.3		3.1	2.4		2.9	2.4		2.9	2.4		2.8	2.4		2.3	2.3		24.0
26.0	2.1	1.9	1.6	2.7	2.2	1.7	2.6	2.1		2.9	2.2		2.9	2.2		2.9	2.3		2.8	2.3		2.3	2.2		26.0
28.0	1.9	1.7	1.5	2.5	2.0	1.6	2.5	2.0	1.6	2.7	2.1	1.6	2.7	2.1	1.6	2.8	2.2	1.6	2.8	2.2		2.3	2.1		28.0
30.0	1.7	1.6	1.4	2.3	1.9	1.5	2.3	1.9	1.5	2.5	2.0	1.5	2.5	2.0	1.5	2.6	2.0	1.6	2.6	2.0	1.6	2.3	2.0	1.5	30.0
32.0	1.6	1.5	1.3	2.2	1.8	1.4	2.1	1.8	1.4	2.3	1.9	1.5	2.3	1.9	1.5	2.4	1.9	1.5	2.4	1.9	1.5	2.3	1.9	1.5	32.0
34.0	1.5	1.4	1.2	2.0	1.7	1.4	2.0	1.7	1.4	2.1	1.7	1.4	2.2	1.8	1.4	2.3	1.8	1.4	2.3	1.8	1.4	2.2	1.8	1.4	34.0
36.0	1.4	1.3	1.2	1.9	1.6	1.3	1.8	1.6	1.3	2.0	1.7	1.3	2.0	1.7	1.3	2.1	1.7	1.4	2.1	1.7	1.4	2.1	1.7	1.4	36.0
38.0	1.3	1.2		1.7	1.5	1.3	1.7	1.5	1.3	1.9	1.6	1.3	1.9	1.6	1.3	2.0	1.6	1.3	2.0	1.6	1.3	2.0	1.6	1.3	38.0
40.0	1.2			1.6	1.4	1.2	1.6	1.4	1.2	1.8	1.5	1.2	1.8	1.5	1.2	1.9	1.6	1.3	1.9	1.6	1.3	1.9	1.5	1.3	40.0
44.0				1.4	1.3		1.4	1.3		1.6	1.3	1.2	1.6	1.3	1.2	1.7	1.4	1.2	1.7	1.4	1.2	1.6	1.4	1.2	44.0
48.0				1.3	1.2		1.3	1.2		1.4	1.2		1.4	1.2		1.5	1.3	1.1	1.5	1.3	1.1	1.5	1.3	1.1	48.0
52.0				1.2			1.1			1.3	1.1		1.3	1.1		1.4	1.2		1.3	1.2		1.3	1.2		52.0
56.0										1.1			1.1			1.2	1.1		1.2	1.1		1.2	1.1		56.0
60.0																1.1			1.1			1.1			60.0
64.0																									64.0
68.0																									68.0
72.0																									72.0
% 1	0	0	0	46	46	46	0	0	0	92	92	92	46	46	46	92	92	92	46	46	46	0	0	0	1
% 2	0	0	0	46	46	46	0	0	0	46	46	46	46	46	46	46	46	46	46	46	46	0	0	0	2
% 3	0	0	0	46	46	46	0	0	0	46	46	46	46	46	46	46	46	46	46	46	46	46	46	46	3
% 4	0	0	0	0	0	0	46	46	46	0	0	0	46	46	46	46	46	46	46	46	46	92	92	92	4
% 5	0	0	0	0	0	0	92	92	92	0	0	0	0	0	0	0	0	0	46	46	46	92	92	92	5
ID	1	1	1	66	66	66	17	17	17	67	67	67	54	54	54	55	55	55	49	49	49	19	19	19	ID
[DEG]	0~81	40~85	56~85	25~81	41~85	63~85	26~81	42~85	64~85	26~81	40~85	60~85	26~81	40~85	60~85	26~81	39~85	58~85	26~81	40~85	58~85	27~81	41~85	59~85	[DEG]
	1	1	1	1	1	1	1	1	1	1	1	1	1	1	1	1	1	1	1	1	1	1	1	1	
	8.7t	8.7t	8.7t	8.7t	8.7t	8.7t	8.7t	8.7t	8.7t	8.7t	8.7t	8.7t	8.7t	8.7t	8.7t	8.7t	8.7t	8.7t	8.7t	8.7t	8.7t	8.7t	8.7t	8.7t	

m	43.0	43.0	43.0	43.0	43.0	43.0	47.4	47.4	47.4	47.4	47.4	47.4	51.7	51.7	51.7	51.7	51.7	51.7	56.0	56.0	56.0	60.0	60.0	60.0	m
°	5	20	40	5	20	40	5	20	40	5	20	40	5	20	40	5	20	40	5	20	40	5	20	40	°
3.0																									3.0
3.5																									3.5
4.0																									4.0
4.5																									4.5
5.0																									5.0
6.0																									6.0
7.0																									7.0
8.0																									8.0
9.0																									9.0
10.0																									10.0
11.0																									11.0
12.0																									12.0
14.0																									14.0
16.0	2.7			2.1																					16.0
18.0	2.7			2.1			2.4			2.2			2.2			2.1									18.0
20.0	2.7			2.1			2.4			2.2			2.2			2.1									20.0
22.0	2.7	2.6		2.1	2.1		2.4	2.4		2.2	2.2		2.2			2.1			2.1			1.6			22.0
24.0	2.7	2.5		2.1	2.1		2.4	2.4		2.2	2.2		2.2	2.2		2.1	2.1		2.1	2.1		1.6			24.0
26.0	2.7	2.3		2.1	2.1		2.4	2.3		2.2	2.2		2.2	2.2		2.1	2.1		2.1	2.1		1.6	1.6		26.0
28.0	2.7	2.2		2.1	2.1		2.4	2.2		2.2	2.2		2.2	2.2		2.1	2.1		2.1	2.1		1.6	1.6		28.0
30.0	2.7	2.1	1.6	2.1	2.1		2.4	2.1		2.2	2.1		2.2	2.1		2.1	2.1		2.1	2.1		1.6	1.6		30.0
32.0	2.6	2.0	1.5	2.1	2.0	1.5	2.4	2.0	1.5	2.2	2.0	1.5	2.2	2.0		2.1	2.0		2.1	2.0		1.6	1.6		32.0
34.0	2.5	1.9	1.4	2.1	1.9	1.4	2.4	1.9	1.5	2.2	1.9	1.4	2.2	1.9	1.4	2.1	1.9	1.4	2.1	1.9	1.4	1.6	1.6		34.0
36.0	2.3	1.8	1.4	2.1	1.8	1.4	2.4	1.8	1.4	2.2	1.8	1.4	2.2	1.9	1.4	2.1	1.8	1.4	2.1	1.9	1.4	1.6	1.6	1.2	36.0
38.0	2.2	1.7	1.3	2.1	1.7	1.3	2.3	1.8	1.4	2.2	1.8	1.4	2.2	1.8	1.4	2.1	1.8	1.4	2.1	1.8	1.4	1.6	1.6	1.2	38.0
40.0	2.1	1.7	1.3	2.0	1.6	1.3	2.2	1.7	1.3	2.2	1.7	1.3	2.2	1.7	1.3	2.1	1.7	1.3	2.1	1.7	1.3	1.6	1.6	1.2	40.0
44.0	1.9	1.5	1.2	1.8	1.5	1.2	1.9	1.5	1.2	1.9	1.5	1.2	2.0	1.6	1.2	2.0	1.6	1.2	2.0	1.6	1.2	1.6	1.5	1.1	44.0
48.0	1.7	1.4	1.2	1.6	1.4	1.2	1.8	1.4	1.2	1.7	1.4	1.2	1.8	1.5	1.2	1.8	1.5	1.2	1.8	1.5	1.2	1.6	1.4	1.1	48.0
52.0	1.5	1.3	1.1	1.5	1.3	1.1	1.6	1.3	1.1	1.6	1.3	1.1	1.6	1.4	1.1	1.6	1.4	1.1	1.7	1.4	1.1	1.4	1.3	1.0	52.0
56.0	1.4	1.2		1.3	1.2		1.4	1.2		1.4	1.2		1.5	1.3	1.1	1.5	1.3	1.1	1.5	1.3	1.1	1.2	1.2	1.0	56.0
60.0	1.2	1.1		1.2	1.1		1.1	1.2		1.3	1.2		1.1	1.2		1.3	1.2		1.2	1.2	1.1		1.0	0.9	60.0
64.0				1.1	1.1						1.1					1.1	1.1			1.1					64.0
68.0				1.0																					68.0
72.0																									72.0
% 1	92	92	92	0	0	0	92	92	92	46	46	46	92	92	92	46	46	46	92	92	92	100	100	100	1
% 2	92	92	92	46	46	46	92	92	92	92	92	92	92	92	92	92	92	92	92	92	92	100	100	100	2
% 3	46	46	46	92	92	92	92	92	92	92	92	92	92	92	92	92	92	92	92	92	92	100	100	100	3
% 4	46	46	46	92	92	92	46	46	46	92	92	92	92	92	92	92	92	92	92	92	92	100	100	100	4
% 5	46	46	46	92	92	92	46	46	46	46	46	46	46	46	46	92	92	92	92	92	92	100	100	100	5
ID	42	42	42	21	21	21	38	38	38	31	31	31	32	32	32	23	23	23	24	24	24	16	16	16	ID
[DEG]	41~81	46~85	60~85	29~81	40~85	61~85	46~81	51~85	64~85	47~81	46~85	64~85	51~81	55~85	63~85	47~81	51~85	63~85	55~81	55~85	62~85	60~81	61~85	65~85	[DEG]
	1	1	1	1	1	1	1	1	1	1	1	1	1	1	1	1	1	1	1	1	1	1	1	1	
	8.7t	8.7t	8.7t	8.7t	8.7t	8.7t	8.7t	8.7t	8.7t	8.7t	8.7t	8.7t	8.7t	8.7t	8.7t	8.7t	8.7t	8.7t	8.7t	8.7t	8.7t	8.7t	8.7t	8.7t	

油圧チルトジブ

HLJ	1.0m + 2.8m	28.9 t	8.0m x 7.5m	360 °	JPN

m	12.8	12.8	12.8	25.8	25.8	25.8	25.8	25.8	25.8	30.1	30.1	30.1	30.1	30.1	30.1	34.4	34.4	34.4	34.4	34.4	34.4	34.4	34.4	34.4	m
°	5	20	40	5	20	40	5	20	40	5	20	40	5	20	40	5	20	40	5	20	40	5	20	40	°
3.0		31.6	25.3																						3.0
3.5	38.1	30.3	24.6		31.4			25.0																	3.5
4.0	36.1	29.1	23.9		30.6	23.4		24.2						31.2											4.0
4.5	34.3	28.0	23.3		29.8	23.1		23.3	21.5		30.2			30.4											4.5
5.0	32.7	27.0	22.8		29.0	22.7		22.4	20.6		29.5	22.8		29.8	22.9		29.9			24.9			16.9		5.0
6.0	29.9	25.3	21.8		27.7	22.0		20.5	19.0		28.3	22.2		28.5	22.3		28.9	22.5		24.9	23.0		16.9	16.9	6.0
7.0	27.7	23.8	20.9		26.5	21.3		18.9	17.7		27.1	21.6		27.4	21.7		27.9	22.0		24.9	22.4		16.9	16.9	7.0
8.0	25.7	22.6	20.2	32.0	25.4	20.8	18.6	17.5	16.5		26.1	21.1		26.3	21.2		26.9	21.5		24.3	21.9		16.9	16.7	8.0
9.0	24.1	21.5		30.3	24.4	20.2	17.3	16.3	15.5	32.0	25.2	20.6	32.2	25.4	20.7		26.0	21.0		23.1	20.9		16.2	15.9	9.0
10.0	22.7	20.6		28.7	23.5	19.7	16.1	15.3	14.6	30.1	24.3	20.2	30.7	24.5	20.2		25.2	20.6	24.4	22.1	20.1		15.3	14.9	10.0
11.0	21.5	19.9		27.4	22.7	19.3	15.1	14.4	13.7	28.0	23.6	19.8	29.4	23.7	19.8	26.1	24.4	20.2	23.2	21.1	19.3	14.8	14.4	14.0	11.0
12.0	20.6	19.3		26.2	21.9	18.9	14.2	13.6	13.0	26.1	22.8	19.4	28.1	23.0	19.4	24.4	23.7	19.8	22.1	20.2	18.6	13.9	13.5	13.2	12.0
14.0				23.0	20.6	18.2	12.6	12.2	11.8	22.5	21.6	18.7	23.5	21.7	18.7	21.5	21.2	19.1	20.3	18.7	17.4	12.3	12.1	11.8	14.0
16.0				18.5	18.7	17.7	11.4	11.1	10.8	17.9	18.2	18.1	18.9	19.1	18.2	18.4	18.7	18.6	18.7	17.4	16.3	11.1	10.9	10.6	16.0
18.0				15.1	15.3		10.3	10.0		14.6	14.8	15.0	15.6	15.8	15.9	15.1	15.3	15.5	16.2	16.3	15.4	9.9	9.8	9.7	18.0
20.0				12.6	12.7		9.3	9.2		12.1	12.2		13.0	13.2		12.5	12.7	12.9	13.7	13.8	13.9	8.9	8.8	8.8	20.0
22.0				10.6	10.7		8.5	8.4		10.1	10.2		11.0	11.1		10.5	10.7		11.6	11.7		8.1	8.0		22.0
24.0				9.0			7.9			8.5	8.6		9.4	9.5		8.9	9.0		10.0	10.1		7.4	7.3		24.0
26.0										7.1	7.2		8.1	8.1		7.6	7.7		8.6	8.7		6.8	6.7		26.0
28.0										6.0			6.9			6.4	6.5		7.5	7.6		6.2	6.2		28.0
30.0																5.5			6.5			5.8			30.0
32.0																4.7			5.7			5.4			32.0
34.0																									34.0
36.0																									36.0
38.0																									38.0
40.0																									40.0
44.0																									44.0
48.0																									48.0
52.0																									52.0
56.0																									56.0
60.0																									60.0
64.0																									64.0
68.0																									68.0
72.0																									72.0
1	0	0	0	46	46	46	0	0	0	92	92	92	46	46	46	92	92	92	46	46	46	0	0	0	1
2	0	0	0	46	46	46	0	0	0	46	46	46	46	46	46	46	46	46	46	46	46	0	0	0	2
3	0	0	0	46	46	46	0	0	0	46	46	46	46	46	46	46	46	46	46	46	46	46	46	46	3
4	0	0	0	0	0	0	46	46	46	0	0	0	46	46	46	46	46	46	46	46	46	92	92	92	4
5	0	0	0	0	0	0	92	92	92	0	0	0	0	0	0	0	0	0	46	46	46	92	92	92	5
ID	1	1	1	66	66	66	17	17	17	67	67	67	54	54	54	55	55	55	49	49	49	19	19	19	ID
[DEG]	0~76	34~85	58~85	29~76	38~85	56~85	29~76	38~85	57~85	29~76	37~85	58~85	28~76	36~85	58~85	28~76	41~85	59~85	28~76	41~85	59~85	29~76	41~85	59~85	[DEG]
	5	5	5	4	4	4	3	3	3	4	4	4	4	4	4	4	4	4	3	3	3	2	2	2	
	60t	60t	60t	60t	60t	60t	26t	26t	26t	60t	60t	60t	60t	60t	60t	60t	60t	60t	26t	26t	26t	26t	26t	26t	

m	43.0	43.0	43.0	43.0	43.0	43.0	47.4	47.4	47.4	47.4	47.4	47.4	51.7	51.7	51.7	51.7	51.7	51.7	56.0	56.0	56.0	60.0	60.0	60.0	m
°	5	20	40	5	20	40	5	20	40	5	20	40	5	20	40	5	20	40	5	20	40	5	20	40	°
3.0																									3.0
3.5																									3.5
4.0																									4.0
4.5																									4.5
5.0																									5.0
6.0																									6.0
7.0		17.1	17.1		12.1	12.1		13.9			12.4														7.0
8.0		17.1	17.1		12.1	12.1		13.9	13.9		12.4	12.4		11.1			9.8								8.0
9.0		17.1	17.1		12.1	12.1		13.9	13.9		12.4	12.4		11.1	11.1		9.8	9.8		9.0	9.0		7.8		9.0
10.0		17.1	17.1		12.1	12.1		13.9	13.9		12.4	12.4		11.1	11.1		9.8	9.8		9.0	9.0		7.8	7.8	10.0
11.0		17.1	17.1		12.1	12.1		13.9	13.9		12.4	12.4		11.1	11.1		9.8	9.8		9.0	9.0		7.8	7.8	11.0
12.0		17.1	17.1		12.1	12.1		13.9	13.9		12.4	12.4		11.1	11.1		9.8	9.8		9.0	9.0		7.8	7.8	12.0
14.0	17.1	17.1	17.1	12.1	12.1	12.1		13.9	13.9		12.4	12.4		11.1	11.1		9.8	9.8		9.0	9.0		7.8	7.8	14.0
16.0	17.1	17.1	16.8	11.5	11.4	11.2	13.9	13.9	13.9	12.4	12.4	12.4	11.1	11.1	11.1	9.8	9.8	9.8		9.0	9.0		7.8	7.8	16.0
18.0	15.6	15.5	15.4	10.4	10.3	10.2	13.9	13.9	13.7	12.4	12.1	11.8	11.1	11.1	11.1	9.8	9.8	9.8	9.0	9.0	9.0		7.8	7.8	18.0
20.0	13.1	13.3	13.5	9.5	9.4	9.3	13.2	13.0	12.7	11.4	11.1	10.9	11.1	11.1	11.1	9.8	9.8	9.8	9.0	9.0	9.0	7.8	7.8	7.8	20.0
22.0	11.1	11.2	11.4	8.7	8.6	8.5	11.2	11.4	11.5	10.5	10.3	10.1	10.9	10.7	10.5	9.5	9.4	9.3	9.0	9.0	9.0	7.8	7.8	7.8	22.0
24.0	9.5	9.6	9.7	8.0	7.9	7.8	9.6	9.7	9.8	9.7	9.6	9.4	9.8	9.9	9.8	8.9	8.7	8.6	9.0	9.0	8.9	7.6	7.4	7.3	24.0
26.0	8.1	8.2	8.3	7.4	7.3	7.3	8.2	8.3	8.4	8.8	8.9	8.8	8.4	8.5	8.7	8.2	8.1	8.0	8.6	8.4	8.3	7.1	6.9	6.8	26.0
28.0	7.0	7.1		6.8	6.8		7.1	7.2	7.3	7.7	7.8	7.9	7.3	7.4	7.5	7.7	7.6	7.5	7.6	7.7	7.8	6.6	6.5	6.4	28.0
30.0	6.0	6.1		6.4	6.3		6.1	6.2		6.7	6.8		6.3	6.4	6.5	7.0	7.1	7.1	6.6	6.7	6.8	6.2	6.1	6.0	30.0
32.0	5.2	5.2		6.0	5.9		5.3	5.4		5.9	5.9		5.5	5.6		6.1	6.2		5.8	5.8	5.9	5.7	5.7	5.7	32.0
34.0	4.4	4.5		5.5	5.5		4.5	4.6		5.1	5.2		4.8	4.8		5.4	5.5		5.0	5.1		5.0	5.1	5.2	34.0
36.0	3.8	3.8		5.1	5.2		3.9	4.0		4.5	4.6		4.1	4.2		4.8	4.8		4.4	4.4		4.4	4.4		36.0
38.0	3.2			4.7			3.3	3.4		3.9	4.0		3.5	3.6		4.2	4.2		3.8	3.9		3.8	3.9		38.0
40.0	2.7			4.2			2.8	2.8		3.4	3.5		3.0	3.1		3.7	3.7		3.3	3.4		3.3	3.3		40.0
44.0							1.9			2.5			2.1			2.8			2.4	2.4		2.4	2.4		44.0
48.0													1.4			2.1			1.6			1.6	1.7		48.0
52.0																									52.0
56.0																									56.0
60.0																									60.0
64.0																									64.0
68.0																									68.0
72.0																									72.0
1	92	92	92	0	0	0	92	92	92	46	46	46	92	92	92	46	46	46	92	92	92	100	100	100	1
2	92	92	92	46	46	46	92	92	92	92	92	92	92	92	92	92	92	92	92	92	92	100	100	100	2
3	46	46	46	92	92	92	92	92	92	92	92	92	92	92	92	92	92	92	92	92	92	100	100	100	3
4	46	46	46	92	92	92	46	46	46	92	92	92	92	92	92	92	92	92	92	92	92	100	100	100	4
5	46	46	46	92	92	92	46	46	46	46	46	46	46	46	46	92	92	92	92	92	92	100	100	100	5
ID	42	42	42	21	21	21	38	38	38	31	31	31	32	32	32	23	23	23	24	24	24	16	16	16	ID
[DEG]	28~76	39~85	58~85	29~76	40~85	58~85	28~76	38~85	59~85	28~76	38~85	59~85	29~76	45~85	60~85	29~76	45~85	60~85	37~76	44~85	61~85	43~76	43~85	62~85	[DEG]
	2	2	2	2	2	2	2	2	2	2	2	2	2	2	2	2	2	2	2	2	2	2	2	2	
	26t	26t	26t	26t	26t	26t	26t	26t	26t	26t	26t	26t	26t	26t	26t	26t	26t	26t	26t	26t	26t	26t	26t	26t	

HLJ	1.0m + 9.2m	28.9 t	8.0m x 7.5m	360 °	JPN

m	12.8	12.8	12.8	25.8	25.8	25.8	25.8	25.8	25.8	30.1	30.1	30.1	30.1	30.1	30.1	34.4	34.4	34.4	34.4	34.4	34.4	34.4	34.4	34.4	m
°	5	20	40	5	20	40	5	20	40	5	20	40	5	20	40	5	20	40	5	20	40	5	20	40	°
3.0																									3.0
3.5																									3.5
4.0	15.0																								4.0
4.5	15.0																								4.5
5.0	15.0	13.5																							5.0
6.0	15.0	12.4			14.4			14.1																	6.0
7.0	14.8	11.4	8.9	15.0	13.5		14.3	13.3			13.6			13.8			13.8			13.4					7.0
8.0	13.4	10.6	8.4	15.0	12.8		14.3	12.5		15.0	12.9		15.0	13.1			13.2			13.3			10.1		8.0
9.0	12.2	9.9	8.0	15.0	12.1	8.7	14.0	11.9	8.6	15.0	12.3	8.8	15.0	12.5	8.8	15.0	12.6		13.4	12.7			10.1		9.0
10.0	11.2	9.2	7.6	15.0	11.5	8.4	13.2	11.3	8.4	15.0	11.8	8.5	15.0	11.9	8.6	15.0	12.1	8.6	13.4	12.2	8.6	10.1	10.1		10.0
11.0	10.4	8.7	7.3	15.0	10.9	8.2	12.5	10.8	8.1	15.0	11.3	8.3	15.0	11.4	8.3	15.0	11.6	8.4	13.4	11.7	8.4	10.1	10.1	8.3	11.0
12.0	9.6	8.2	7.0	14.2	10.4	7.9	11.7	10.3	7.9	15.0	10.8	8.1	15.0	10.9	8.1	15.0	11.1	8.2	13.4	11.2	8.2	10.1	10.1	8.1	12.0
14.0	8.4	7.4	6.5	12.6	9.6	7.5	10.3	9.4	7.4	13.5	10.0	7.7	13.7	10.1	7.7	14.4	10.3	7.8	13.4	10.4	7.8	10.1	9.9	7.8	14.0
16.0	7.5	6.8		11.3	8.9	7.1	9.1	8.4	7.1	12.2	9.3	7.3	12.3	9.3	7.3	13.1	9.7	7.5	13.2	9.7	7.5	9.7	9.2	7.4	16.0
18.0	6.8			10.2	8.3	6.8	8.1	7.6	6.8	11.1	8.7	7.0	11.2	8.7	7.0	11.9	9.1	7.2	12.0	9.1	7.2	8.7	8.4	7.1	18.0
20.0				9.3	7.7	6.5	7.3	6.9	6.5	10.2	8.2	6.7	10.2	8.2	6.8	11.0	8.6	6.9	11.0	8.6	6.9	7.8	7.6	6.9	20.0
22.0				8.6	7.3	6.3	6.7	6.3	6.1	9.4	7.7	6.5	9.4	7.8	6.5	10.1	8.1	6.7	10.2	8.2	6.7	7.1	6.9	6.7	22.0
24.0				8.0	6.9		6.1	5.8		8.7	7.3	6.3	8.8	7.4	6.3	9.4	7.7	6.5	9.5	7.7	6.5	6.4	6.3	6.2	24.0
26.0				7.4	6.6		5.6	5.4		8.1	7.0		8.2	7.0		8.3	7.4	6.3	8.9	7.4	6.3	5.9	5.8	5.7	26.0
28.0				7.0	6.3		5.2	5.0		6.9	6.7		7.7	6.7		7.2	7.0		8.0	7.1		5.4	5.3		28.0
30.0				6.6			4.8			6.0	6.3		6.8	6.4		6.2	6.5		7.1	6.8		5.0	4.9		30.0
32.0										5.2	5.4		5.9	6.1		5.4	5.6		6.2	6.4		4.6	4.6		32.0
34.0										4.4			5.2			4.7	4.9		5.5	5.7		4.3	4.3		34.0
36.0																4.0			4.9			4.0			36.0
38.0																3.5			4.3			3.7			38.0
40.0																									40.0
44.0																									44.0
48.0																									48.0
52.0																									52.0
56.0																									56.0
60.0																									60.0
64.0																									64.0
68.0																									68.0
72.0																									72.0
1	0	0	0	46	46	46	0	0	0	92	92	92	46	46	46	92	92	92	46	46	46	0	0	0	1
2	0	0	0	46	46	46	0	0	0	46	46	46	46	46	46	46	46	46	46	46	46	0	0	0	2
3	0	0	0	46	46	46	0	0	0	46	46	46	46	46	46	46	46	46	46	46	46	46	46	46	3
4	0	0	0	0	0	0	46	46	46	0	0	0	46	46	46	46	46	46	46	46	46	92	92	92	4
5	0	0	0	0	0	0	92	92	92	0	0	0	0	0	0	0	0	0	46	46	46	92	92	92	5
ID	1	1	1	66	66	66	17	17	17	67	67	67	54	54	54	55	55	55	49	49	49	19	19	19	ID
[DEG]	0~79	44~85	57~85	27~79	37~85	56~85	28~79	38~85	57~85	27~79	37~85	58~85	27~79	37~85	57~85	27~79	40~85	58~85	27~79	41~85	59~85	28~79	41~85	59~85	[DEG]
	2	2	2	2	2	2	2	2	2	2	2	2	2	2	2	2	2	2	2	2	2	2	2	2	
	26t	26t	26t	26t	26t	26t	26t	26t	26t	26t	26t	26t	26t	26t	26t	26t	26t	26t	26t	26t	26t	26t	26t	26t	

m	43.0	43.0	43.0	43.0	43.0	43.0	47.4	47.4	47.4	47.4	47.4	47.4	51.7	51.7	51.7	51.7	51.7	51.7	56.0	56.0	56.0	60.0	60.0	60.0	m
°	5	20	40	5	20	40	5	20	40	5	20	40	5	20	40	5	20	40	5	20	40	5	20	40	°
3.0																									3.0
3.5																									3.5
4.0																									4.0
4.5																									4.5
5.0																									5.0
6.0																									6.0
7.0																									7.0
8.0																									8.0
9.0		10.6			7.2																				9.0
10.0		10.6			7.2			8.4			7.5														10.0
11.0		10.6			7.2			8.4			7.5			7.0			6.4			6.4					11.0
12.0	10.6	10.6	8.3	7.2	7.2	7.2		8.4			7.5			7.0			6.4			6.4			5.7		12.0
14.0	10.6	10.6	7.9	7.2	7.2	7.2	8.4	8.4	8.0	7.5	7.5	7.5		7.0	7.0	6.4	6.4	6.4		6.4			5.7		14.0
16.0	10.6	10.2	7.6	7.2	7.2	7.2	8.4	8.4	7.7	7.5	7.5	7.5	7.0	7.0	7.0	6.4	6.4	6.4	6.4	6.4	6.4		5.7	5.7	16.0
18.0	10.6	9.6	7.4	7.2	7.2	7.2	8.4	8.4	7.4	7.5	7.5	7.5	7.0	7.0	7.0	6.4	6.4	6.4	6.4	6.4	6.4	5.7	5.7	5.7	18.0
20.0	10.6	9.2	7.1	7.2	7.2	7.1	8.4	8.4	7.2	7.5	7.5	7.2	7.0	7.0	7.0	6.4	6.4	6.4	6.4	6.4	6.4	5.7	5.7	5.7	20.0
22.0	10.6	8.7	6.9	7.2	7.2	6.9	8.4	8.4	7.0	7.5	7.5	7.0	7.0	7.0	7.0	6.4	6.4	6.4	6.4	6.4	6.4	5.7	5.7	5.7	22.0
24.0	9.8	8.3	6.7	7.2	7.0	6.7	8.4	8.4	6.8	7.5	7.5	6.8	7.0	7.0	6.9	6.4	6.4	6.4	6.4	6.4	6.4	5.7	5.7	5.5	24.0
26.0	8.5	8.0	6.6	6.8	6.6	6.4	8.4	8.2	6.6	7.5	7.5	6.7	7.0	7.0	6.7	6.4	6.4	6.4	6.4	6.4	6.4	5.5	5.4	5.2	26.0
28.0	7.3	7.6	6.4	6.3	6.2	6.0	7.5	7.9	6.5	7.5	7.4	6.5	7.0	7.0	6.6	6.4	6.4	6.2	6.4	6.4	6.2	5.4	5.1	4.9	28.0
30.0	6.4	6.7	6.3	5.8	5.7	5.6	6.5	6.9	6.3	7.1	6.9	6.3	6.7	7.0	6.4	6.4	6.1	5.9	6.4	6.2	5.9	5.0	4.8	4.6	30.0
32.0	5.5	5.8	6.1	5.3	5.3	5.3	5.7	6.0	6.2	6.2	6.5	6.2	5.8	6.2	6.3	6.1	5.8	5.7	6.1	5.9	5.7	4.7	4.5	4.3	32.0
34.0	4.8	5.1		4.9	4.9		5.0	5.3	5.5	5.5	5.8	6.0	5.1	5.4	5.7	5.7	5.6	5.4	5.3	5.6	5.5	4.4	4.2	4.1	34.0
36.0	4.2	4.4		4.6	4.6		4.3	4.6		4.9	5.1		4.5	4.7	5.0	5.0	5.3	5.2	4.7	4.9	5.2	4.1	4.0	3.9	36.0
38.0	3.6	3.8		4.2	4.3		3.8	4.0		4.3	4.5		3.9	4.1		4.5	4.7		4.1	4.3	4.6	3.9	3.7	3.7	38.0
40.0	3.1	3.3		3.9	4.0		3.3	3.5		3.8	4.0		3.4	3.6		4.0	4.2		3.6	3.8		3.5	3.5	3.5	40.0
44.0	2.2			3.4			2.3	2.5		2.9	3.1		2.5	2.7		3.1	3.2		2.7	2.9		2.7	2.9		44.0
48.0				2.9			1.5			2.1			1.6	1.8		2.4	2.5		1.9	2.1		1.8	2.0		48.0
52.0										1.4						1.7			1.2	1.3		1.1	1.3		52.0
56.0																1.1									56.0
60.0																									60.0
64.0																									64.0
68.0																									68.0
72.0																									72.0
1	92	92	92	0	0	0	92	92	92	46	46	46	92	92	92	46	46	46	92	92	92	100	100	100	1
2	92	92	92	46	46	46	92	92	92	92	92	92	92	92	92	92	92	92	92	92	92	100	100	100	2
3	46	46	46	92	92	92	92	92	92	92	92	92	92	92	92	92	92	92	92	92	92	100	100	100	3
4	46	46	46	92	92	92	46	46	46	92	92	92	92	92	92	92	92	92	92	92	92	100	100	100	4
5	46	46	46	92	92	92	46	46	46	46	46	46	46	46	46	92	92	92	92	92	92	100	100	100	5
ID	42	42	42	21	21	21	38	38	38	31	31	31	32	32	32	23	23	23	24	24	24	16	16	16	ID
[DEG]	32~79	43~85	58~85	22~79	44~85	58~85	32~79	42~85	59~85	22~79	42~85	60~85	40~79	41~85	61~85	23~79	42~85	61~85	39~79	41~85	62~85	44~79	46~85	62~85	[DEG]
	2	2	2	1	1	1	1	1	1	1	1	1	1	1	1	1	1	1	1	1	1	1	1	1	
	26t	26t	26t	8.7t	8.7t	8.7t	8.7t	8.7t	8.7t	8.7t	8.7t	8.7t	8.7t	8.7t	8.7t	8.7t	8.7t	8.7t	8.7t	8.7t	8.7t	8.7t	8.7t	8.7t	

油圧チルトジブ

HLJ	1.0m + 17.0m	28.9 t	8.0m x 7.5m	360 °	JPN

m	12.8	12.8	12.8	25.8	25.8	25.8	25.8	25.8	25.8	30.1	30.1	30.1	30.1	30.1	30.1	34.4	34.4	34.4	34.4	34.4	34.4	34.4	34.4	34.4	m
°	5	20	40	5	20	40	5	20	40	5	20	40	5	20	40	5	20	40	5	20	40	5	20	40	°
3.0																									3.0
3.5																									3.5
4.0																									4.0
4.5																									4.5
5.0																									5.0
6.0	7.3																								6.0
7.0	6.8																								7.0
8.0	6.4	5.4		7.0			5.6																		8.0
9.0	6.0	5.1		6.7			5.6			6.7			6.5												9.0
10.0	5.7	4.8		6.4	5.0		5.6	4.8		6.5			6.3			6.3			5.9			4.6			10.0
11.0	5.3	4.6		6.1	4.8		5.6	4.6		6.2	4.9		6.1	4.8		6.1	4.8		5.9	4.7		4.6			11.0
12.0	5.1	4.4		5.8	4.7		5.5	4.5		6.0	4.7		5.9	4.6		5.9	4.7		5.7	4.6		4.6	4.4		12.0
14.0	4.6	4.0	3.5	5.4	4.4		5.1	4.2		5.5	4.4		5.4	4.4		5.5	4.4		5.4	4.3		4.6	4.2		14.0
16.0	4.2	3.7	3.3	5.0	4.1	3.4	4.8	3.9	3.3	5.1	4.2	3.4	5.1	4.1	3.4	5.2	4.2	3.4	5.1	4.1		4.6	4.0		16.0
18.0	3.8	3.4	3.1	4.6	3.9	3.3	4.4	3.7	3.2	4.8	3.9	3.3	4.8	3.9	3.3	4.9	3.9	3.3	4.8	3.9	3.2	4.6	3.8	3.2	18.0
20.0	3.5	3.2	3.0	4.3	3.7	3.1	4.2	3.5	3.1	4.5	3.7	3.2	4.5	3.7	3.2	4.6	3.8	3.2	4.5	3.7	3.1	4.3	3.6	3.1	20.0
22.0	3.3	3.1	2.9	4.1	3.5	3.0	3.9	3.4	3.0	4.3	3.6	3.1	4.2	3.5	3.0	4.3	3.6	3.1	4.3	3.5	3.0	4.1	3.5	3.0	22.0
24.0	3.1	2.9		3.8	3.3	2.9	3.7	3.2	2.9	4.0	3.4	3.0	4.0	3.4	2.9	4.1	3.5	3.0	4.0	3.4	2.9	3.9	3.3	2.9	24.0
26.0	3.0			3.6	3.2	2.9	3.5	3.1	2.8	3.8	3.3	2.9	3.8	3.2	2.9	3.9	3.3	2.9	3.8	3.3	2.9	3.7	3.2	2.8	26.0
28.0				3.5	3.1	2.8	3.4	3.0	2.7	3.6	3.2	2.8	3.6	3.1	2.8	3.7	3.2	2.8	3.7	3.2	2.8	3.6	3.1	2.7	28.0
30.0				3.3	3.0		3.2	2.9		3.5	3.0	2.8	3.4	3.0	2.7	3.6	3.1	2.8	3.5	3.1	2.7	3.4	3.0	2.7	30.0
32.0				3.2	2.9		3.1	2.8		3.3	2.9	2.7	3.3	2.9	2.7	3.4	3.0	2.7	3.4	3.0	2.7	3.3	2.9	2.6	32.0
34.0				3.0	2.8		3.0	2.7		3.2	2.9		3.2	2.8		3.3	2.9	2.7	3.3	2.9	2.6	3.2	2.8	2.6	34.0
36.0				2.9	2.7		2.9	2.7		3.1	2.8		3.1	2.8		3.2	2.8		3.1	2.8		3.1	2.7		36.0
38.0				2.9			2.8			3.0	2.7		3.0	2.7		3.1	2.8		3.0	2.7		3.0	2.7		38.0
40.0										2.9			2.9			3.0	2.7		2.9	2.7		2.9	2.6		40.0
44.0																2.8			2.8			2.6			44.0
48.0																									48.0
52.0																									52.0
56.0																									56.0
60.0																									60.0
64.0																									64.0
68.0																									68.0
72.0																									72.0
1	0	0	0	46	46	46	0	0	0	92	92	92	46	46	46	92	92	92	46	46	46	0	0	0	1
2	0	0	0	46	46	46	0	0	0	46	46	46	46	46	46	46	46	46	46	46	46	0	0	0	2
3	0	0	0	46	46	46	0	0	0	46	46	46	46	46	46	46	46	46	46	46	46	46	46	46	3
4	0	0	0	0	0	0	46	46	46	0	0	0	46	46	46	46	46	46	46	46	46	92	92	92	4
5	0	0	0	0	0	0	92	92	92	0	0	0	0	0	0	0	0	0	46	46	46	92	92	92	5
ID	1	1	1	66	66	66	17	17	17	67	67	67	54	54	54	55	55	55	49	49	49	19	19	19	ID
[DEG]	0~81	41~85	56~85	25~81	36~85	59~85	26~81	37~85	60~85	31~81	40~85	57~85	31~81	40~85	57~85	31~81	43~85	58~85	32~81	44~85	58~85	32~81	44~85	58~85	[DEG]
	1	1	1	1	1	1	1	1	1	1	1	1	1	1	1	1	1	1	1	1	1	1	1	1	
	8.7t	8.7t	8.7t	8.7t	8.7t	8.7t	8.7t	8.7t	8.7t	8.7t	8.7t	8.7t	8.7t	8.7t	8.7t	8.7t	8.7t	8.7t	8.7t	8.7t	8.7t	8.7t	8.7t	8.7t	

m	43.0	43.0	43.0	43.0	43.0	43.0	47.4	47.4	47.4	47.4	47.4	47.4	51.7	51.7	51.7	51.7	51.7	51.7	56.0	56.0	56.0	60.0	60.0	60.0	m
°	5	20	40	5	20	40	5	20	40	5	20	40	5	20	40	5	20	40	5	20	40	5	20	40	°
3.0																									3.0
3.5																									3.5
4.0																									4.0
4.5																									4.5
5.0																									5.0
6.0																									6.0
7.0																									7.0
8.0																									8.0
9.0																									9.0
10.0																									10.0
11.0																									11.0
12.0	5.5			4.1																					12.0
14.0	5.4	4.3		4.1	4.1		4.7	4.2		4.3	4.2		4.1			3.9									14.0
16.0	5.1	4.1		4.1	3.9		4.7	4.1		4.3	4.0		4.1	4.0		3.9	3.9		3.9	3.8		3.6	3.6		16.0
18.0	4.8	3.9	3.2	4.1	3.8		4.7	3.9		4.3	3.8		4.1	3.8		3.9	3.7		3.9	3.7		3.6	3.6		18.0
20.0	4.6	3.8	3.1	4.1	3.6	3.1	4.6	3.7	3.1	4.3	3.7	3.1	4.1	3.7	3.1	3.9	3.6	3.0	3.9	3.6		3.6	3.5		20.0
22.0	4.4	3.6	3.0	4.1	3.5	3.0	4.4	3.6	3.0	4.3	3.5	3.0	4.1	3.5	3.0	3.9	3.5	2.9	3.9	3.5	2.9	3.6	3.4	2.9	22.0
24.0	4.2	3.5	3.0	4.0	3.3	2.9	4.2	3.5	2.9	4.1	3.4	2.9	4.1	3.4	2.9	3.9	3.4	2.9	3.9	3.3	2.9	3.6	3.3	2.8	24.0
26.0	4.0	3.3	2.9	3.8	3.2	2.8	4.0	3.3	2.9	3.9	3.3	2.8	4.0	3.3	2.8	3.8	3.2	2.8	3.8	3.2	2.8	3.6	3.2	2.8	26.0
28.0	3.8	3.2	2.8	3.7	3.1	2.7	3.9	3.2	2.8	3.8	3.2	2.8	3.8	3.2	2.8	3.7	3.1	2.7	3.7	3.1	2.7	3.6	3.1	2.7	28.0
30.0	3.7	3.1	2.8	3.5	3.0	2.7	3.7	3.1	2.7	3.6	3.1	2.7	3.7	3.1	2.7	3.6	3.1	2.7	3.6	3.1	2.7	3.5	3.0	2.6	30.0
32.0	3.5	3.0	2.7	3.4	2.9	2.6	3.6	3.0	2.7	3.5	3.0	2.7	3.5	3.0	2.7	3.5	3.0	2.6	3.5	3.0	2.6	3.4	2.9	2.6	32.0
34.0	3.4	2.9	2.6	3.3	2.9	2.6	3.5	3.0	2.6	3.4	2.9	2.6	3.4	2.9	2.6	3.4	2.9	2.6	3.4	2.9	2.6	3.3	2.9	2.5	34.0
36.0	3.3	2.9	2.6	3.2	2.8	2.5	3.3	2.9	2.6	3.3	2.8	2.6	3.3	2.9	2.6	3.3	2.8	2.5	3.3	2.8	2.5	3.2	2.8	2.5	36.0
38.0	3.2	2.8	2.6	3.1	2.7	2.5	3.2	2.8	2.5	3.2	2.8	2.5	3.2	2.8	2.5	3.2	2.7	2.5	3.2	2.8	2.5	3.2	2.7	2.5	38.0
40.0	3.1	2.7		3.0	2.6		3.1	2.7	2.5	3.1	2.7	2.5	3.1	2.7	2.5	3.1	2.7	2.4	3.1	2.7	2.4	3.0	2.7	2.4	40.0
44.0	2.9	2.6		2.8	2.5		2.8	2.6		2.9	2.6		2.9	2.6	2.4	2.9	2.6	2.4	2.9	2.6	2.4	2.7	2.5	2.3	44.0
48.0	2.1	2.4		2.7	2.5		2.1	2.4		2.6	2.5		2.1	2.5		2.7	2.5		2.3	2.5		2.2	2.3	2.3	48.0
52.0	1.4			2.4			1.4	1.7		1.9	2.1		1.5	1.8		2.0	2.3		1.6	1.9		1.6	1.9		52.0
56.0										1.4				1.2		1.5	1.7			1.3			1.3		56.0
60.0																									60.0
64.0																									64.0
68.0																									68.0
72.0																									72.0
1	92	92	92	0	0	0	92	92	92	46	46	46	92	92	92	46	46	46	92	92	92	100	100	100	1
2	92	92	92	46	46	46	92	92	92	92	92	92	92	92	92	92	92	92	92	92	92	100	100	100	2
3	46	46	46	92	92	92	92	92	92	92	92	92	92	92	92	92	92	92	92	92	92	100	100	100	3
4	46	46	46	92	92	92	46	46	46	92	92	92	92	92	92	92	92	92	92	92	92	100	100	100	4
5	46	46	46	92	92	92	46	46	46	46	46	46	46	46	46	92	92	92	92	92	92	100	100	100	5
ID	42	42	42	21	21	21	38	38	38	31	31	31	32	32	32	23	23	23	24	24	24	16	16	16	ID
[DEG]	31~81	42~85	60~85	32~81	43~85	60~85	39~81	42~85	61~85	31~81	42~85	61~85	44~81	41~85	60~85	39~81	41~85	60~85	49~81	47~85	63~85	52~81	51~85	62~85	[DEG]
	1	1	1	1	1	1	1	1	1	1	1	1	1	1	1	1	1	1	1	1	1	1	1	1	
	8.7t	8.7t	8.7t	8.7t	8.7t	8.7t	8.7t	8.7t	8.7t	8.7t	8.7t	8.7t	8.7t	8.7t	8.7t	8.7t	8.7t	8.7t	8.7t	8.7t	8.7t	8.7t	8.7t	8.7t	

HLJ	1.0m + 24.0m	28.9 t	8.0m x 7.5m	360 °	JPN

m	12.8	12.8	12.8	25.8	25.8	25.8	25.8	25.8	25.8	30.1	30.1	30.1	30.1	30.1	30.1	34.4	34.4	34.4	34.4	34.4	34.4	34.4	34.4	34.4	m
°	5	20	40	5	20	40	5	20	40	5	20	40	5	20	40	5	20	40	5	20	40	5	20	40	°
3.0																									3.0
3.5																									3.5
4.0																									4.0
4.5																									4.5
5.0																									5.0
6.0																									6.0
7.0																									7.0
8.0	5.1																								8.0
9.0	5.1																								9.0
10.0	5.1			4.9			3.7																		10.0
11.0	5.1			4.9			3.7			4.6			4.3												11.0
12.0	5.1	4.5		4.9			3.7			4.6			4.3			4.2			4.0			3.2			12.0
14.0	4.8	4.0		4.9	4.4		3.7	3.7		4.6	4.4		4.3	4.3		4.2			4.0			3.2			14.0
16.0	4.3	3.6		4.9	4.1		3.7	3.7		4.6	4.1		4.3	4.1		4.2	4.1		4.0	4.0		3.2	3.2		16.0
18.0	3.8	3.3		4.6	3.8		3.7	3.7		4.6	3.8		4.3	3.9		4.2	3.9		4.0	3.8		3.2	3.2		18.0
20.0	3.4	3.0	2.6	4.3	3.5		3.7	3.4		4.4	3.6		4.3	3.6		4.2	3.6		4.0	3.7		3.2	3.2		20.0
22.0	3.1	2.7	2.4	4.1	3.2	2.6	3.7	3.2	2.5	4.2	3.3	2.6	4.2	3.4	2.6	4.2	3.4	2.6	4.0	3.4		3.2	3.2		22.0
24.0	2.8	2.5	2.2	3.7	3.0	2.4	3.7	3.0	2.4	4.0	3.1	2.5	4.0	3.1	2.5	4.0	3.2	2.5	3.9	3.2	2.5	3.2	3.2	2.5	24.0
26.0	2.6	2.3	2.1	3.5	2.8	2.3	3.4	2.8	2.3	3.7	2.9	2.4	3.7	3.0	2.4	3.9	3.0	2.4	3.8	3.1	2.4	3.2	3.0	2.4	26.0
28.0	2.4	2.2	2.0	3.2	2.7	2.2	3.2	2.6	2.2	3.4	2.8	2.3	3.4	2.8	2.3	3.6	2.9	2.3	3.6	2.9	2.3	3.2	2.8	2.3	28.0
30.0	2.2	2.0		3.0	2.5	2.1	2.9	2.5	2.1	3.2	2.6	2.2	3.2	2.6	2.2	3.4	2.7	2.2	3.4	2.7	2.2	3.2	2.7	2.2	30.0
32.0	2.0	1.9		2.8	2.4	2.0	2.8	2.4	2.0	3.0	2.5	2.1	3.0	2.5	2.1	3.2	2.6	2.1	3.2	2.6	2.1	3.1	2.6	2.1	32.0
34.0				2.6	2.3	2.0	2.6	2.3	2.0	2.8	2.4	2.0	2.8	2.4	2.0	3.0	2.5	2.1	3.0	2.5	2.1	3.0	2.5	2.1	34.0
36.0				2.5	2.2	1.9	2.4	2.1	1.9	2.6	2.3	2.0	2.7	2.3	2.0	2.8	2.4	2.0	2.8	2.4	2.0	2.8	2.4	2.0	36.0
38.0				2.3	2.1		2.3	2.1		2.5	2.2	1.9	2.5	2.2	1.9	2.7	2.3	1.9	2.7	2.3	1.9	2.6	2.3	1.9	38.0
40.0				2.2	2.0		2.2	2.0		2.4	2.1		2.4	2.1		2.5	2.2	1.9	2.5	2.2	1.9	2.5	2.2	1.9	40.0
44.0				2.0			2.0			2.1	1.9		2.1	1.9		2.3	2.0		2.3	2.0		2.3	2.0		44.0
48.0										2.0			2.0			2.1	1.9		2.1	1.9		2.0	1.9		48.0
52.0																1.8			1.9			1.8			52.0
56.0																									56.0
60.0																									60.0
64.0																									64.0
68.0																									68.0
72.0																									72.0
1	0	0	0	46	46	46	0	0	0	92	92	92	46	46	46	92	92	92	46	46	46	0	0	0	1
2	0	0	0	46	46	46	0	0	0	46	46	46	46	46	46	46	46	46	46	46	46	0	0	0	2
3	0	0	0	46	46	46	0	0	0	46	46	46	46	46	46	46	46	46	46	46	46	46	46	46	3
4	0	0	0	0	0	0	46	46	46	0	0	0	46	46	46	46	46	46	46	46	46	92	92	92	4
5	0	0	0	0	0	0	92	92	92	0	0	0	0	0	0	0	0	0	46	46	46	92	92	92	5
ID	1	1	1	66	66	66	17	17	17	67	67	67	54	54	54	55	55	55	49	49	49	19	19	19	ID
[DEG]	0~81	37~85	59~85	28~81	44~85	57~85	29~81	45~85	58~85	29~81	43~85	59~85	29~81	43~85	59~85	29~81	42~85	59~85	29~81	42~85	59~85	30~81	43~85	60~85	[DEG]
	1	1	1	1	1	1	1	1	1	1	1	1	1	1	1	1	1	1	1	1	1	1	1	1	
	8.7t	8.7t	8.7t	8.7t	8.7t	8.7t	8.7t	8.7t	8.7t	8.7t	8.7t	8.7t	8.7t	8.7t	8.7t	8.7t	8.7t	8.7t	8.7t	8.7t	8.7t	8.7t	8.7t	8.7t	

m	43.0	43.0	43.0	43.0	43.0	43.0	47.4	47.4	47.4	47.4	47.4	47.4	51.7	51.7	51.7	51.7	51.7	51.7	56.0	56.0	56.0	60.0	60.0	60.0	m
°	5	20	40	5	20	40	5	20	40	5	20	40	5	20	40	5	20	40	5	20	40	5	20	40	°
3.0																									3.0
3.5																									3.5
4.0																									4.0
4.5																									4.5
5.0																									5.0
6.0																									6.0
7.0																									7.0
8.0																									8.0
9.0																									9.0
10.0																									10.0
11.0																									11.0
12.0																									12.0
14.0	3.8			2.9																					14.0
16.0	3.8			2.9			3.3			3.1			3.0			2.9									16.0
18.0	3.8	3.8		2.9	2.9		3.3	3.3		3.1	3.1		3.0	3.0		2.9			2.9						18.0
20.0	3.8	3.6		2.9	2.9		3.3	3.3		3.1	3.1		3.0	3.0		2.9	2.9		2.9	2.9		2.4			20.0
22.0	3.8	3.5		2.9	2.9		3.3	3.3		3.1	3.1		3.0	3.0		2.9	2.9		2.9	2.9		2.4	2.4		22.0
24.0	3.8	3.3	2.5	2.9	2.9		3.3	3.3		3.1	3.1		3.0	3.0		2.9	2.9		2.9	2.9		2.4	2.4		24.0
26.0	3.8	3.2	2.4	2.9	2.9	2.4	3.3	3.2	2.4	3.1	3.1	2.4	3.0	3.0		2.9	2.9		2.9	2.9		2.4	2.4		26.0
28.0	3.7	3.0	2.3	2.9	2.9	2.3	3.3	3.0	2.3	3.1	3.0	2.3	3.0	3.0	2.3	2.9	2.9	2.3	2.9	2.9	2.3	2.4	2.4		28.0
30.0	3.5	2.9	2.3	2.9	2.8	2.2	3.3	2.9	2.3	3.1	2.9	2.3	3.0	2.9	2.3	2.9	2.9	2.3	2.9	2.9	2.3	2.4	2.4	2.0	30.0
32.0	3.4	2.8	2.2	2.9	2.7	2.2	3.3	2.8	2.2	3.1	2.8	2.2	3.0	2.8	2.2	2.9	2.8	2.2	2.9	2.8	2.2	2.4	2.4	2.0	32.0
34.0	3.3	2.6	2.1	2.9	2.6	2.1	3.3	2.7	2.1	3.1	2.7	2.1	3.0	2.7	2.2	2.9	2.7	2.2	2.9	2.8	2.2	2.4	2.4	1.9	34.0
36.0	3.1	2.5	2.1	2.9	2.5	2.1	3.2	2.6	2.1	3.1	2.6	2.1	3.0	2.6	2.1	2.9	2.6	2.1	2.9	2.7	2.1	2.4	2.4	1.9	36.0
38.0	3.0	2.4	2.0	2.9	2.4	2.0	3.1	2.5	2.0	3.1	2.5	2.0	3.0	2.5	2.0	2.9	2.5	2.1	2.9	2.6	2.1	2.4	2.3	1.9	38.0
40.0	2.8	2.3	2.0	2.8	2.3	2.0	3.0	2.4	2.0	2.9	2.4	2.0	3.0	2.4	2.0	2.9	2.4	2.0	2.9	2.5	2.0	2.4	2.3	1.8	40.0
44.0	2.6	2.2	1.9	2.6	2.2	1.9	2.7	2.2	1.9	2.7	2.2	1.9	2.8	2.3	1.9	2.8	2.3	1.9	2.8	2.3	1.9	2.2	2.1	1.7	44.0
48.0	2.4	2.1		2.3	2.0		2.3	2.1	1.8	2.5	2.1	1.8	2.3	2.2	1.9	2.6	2.2	1.9	2.4	2.2	1.9	1.9	1.9	1.7	48.0
52.0	1.7	1.9		2.1	1.9		1.7	2.0		2.1	2.0		1.7	2.0		2.2	2.0		1.8	2.1	1.8	1.7	1.7	1.6	52.0
56.0	1.2	1.4		1.9	1.8			1.4		1.5	1.8		1.1	1.5		1.6	1.9		1.2	1.6		1.1	1.5	1.5	56.0
60.0				1.7							1.3					1.1	1.4								60.0
64.0																									64.0
68.0																									68.0
72.0																									72.0
1	92	92	92	0	0	0	92	92	92	46	46	46	92	92	92	46	46	46	92	92	92	100	100	100	1
2	92	92	92	46	46	46	92	92	92	92	92	92	92	92	92	92	92	92	92	92	92	100	100	100	2
3	46	46	46	92	92	92	92	92	92	92	92	92	92	92	92	92	92	92	92	92	92	100	100	100	3
4	46	46	46	92	92	92	46	46	46	92	92	92	92	92	92	92	92	92	92	92	92	100	100	100	4
5	46	46	46	92	92	92	46	46	46	46	46	46	46	46	46	92	92	92	92	92	92	100	100	100	5
ID	42	42	42	21	21	21	38	38	38	31	31	31	32	32	32	23	23	23	24	24	24	16	16	16	ID
[DEG]	37~81	41~85	61~85	31~81	42~85	62~85	48~81	47~85	60~85	43~81	40~85	60~85	47~81	51~85	64~85	43~81	46~85	64~85	51~81	55~85	62~85	55~81	59~85	61~85	[DEG]
	1	1	1	1	1	1	1	1	1	1	1	1	1	1	1	1	1	1	1	1	1	1	1	1	
	8.7t	8.7t	8.7t	8.7t	8.7t	8.7t	8.7t	8.7t	8.7t	8.7t	8.7t	8.7t	8.7t	8.7t	8.7t	8.7t	8.7t	8.7t	8.7t	8.7t	8.7t	8.7t	8.7t	8.7t	

油圧チルトジブ

HLJ	1.0m + 31.0m	28.9 t	8.0m x 7.5m	360 °	JPN

m	12.8	12.8	12.8	25.8	25.8	25.8	25.8	25.8	25.8	30.1	30.1	30.1	30.1	30.1	30.1	34.4	34.4	34.4	34.4	34.4	34.4	34.4	34.4	34.4	m
°	5	20	40	5	20	40	5	20	40	5	20	40	5	20	40	5	20	40	5	20	40	5	20	40	°
3.0																									3.0
3.5																									3.5
4.0																									4.0
4.5																									4.5
5.0																									5.0
6.0																									6.0
7.0																									7.0
8.0																									8.0
9.0																									9.0
10.0	3.5																								10.0
11.0	3.5																								11.0
12.0	3.5			3.3			2.6																		12.0
14.0	3.5			3.3			2.6			3.1			2.9			2.9			2.8			2.3			14.0
16.0	3.5	3.0		3.3			2.6			3.1			2.9			2.9			2.8			2.3			16.0
18.0	3.2	2.7		3.3	3.0		2.6	2.6		3.1	3.0		2.9	2.9		2.9			2.8			2.3			18.0
20.0	2.9	2.5		3.3	2.7		2.6	2.6		3.1	2.8		2.9	2.8		2.9	2.8		2.8	2.8		2.3	2.3		20.0
22.0	2.6	2.2		3.3	2.5		2.6	2.5		3.1	2.6		2.9	2.6		2.9	2.6		2.8	2.6		2.3	2.3		22.0
24.0	2.3	2.0	1.7	3.0	2.3		2.6	2.3		3.1	2.4		2.9	2.4		2.9	2.4		2.8	2.4		2.3	2.3		24.0
26.0	2.1	1.9	1.6	2.7	2.2	1.7	2.6	2.1		2.9	2.2		2.9	2.2		2.9	2.3		2.8	2.3		2.3	2.2		26.0
28.0	1.9	1.7	1.5	2.5	2.0	1.6	2.5	2.0	1.6	2.7	2.1	1.6	2.7	2.1	1.6	2.8	2.2	1.6	2.8	2.2		2.3	2.1		28.0
30.0	1.7	1.6	1.4	2.3	1.9	1.5	2.3	1.9	1.5	2.5	2.0	1.5	2.5	2.0	1.5	2.6	2.0	1.6	2.6	2.0	1.6	2.3	2.0	1.5	30.0
32.0	1.6	1.5	1.3	2.2	1.8	1.4	2.1	1.8	1.4	2.3	1.9	1.5	2.3	1.9	1.5	2.4	1.9	1.5	2.4	1.9	1.5	2.3	1.9	1.5	32.0
34.0	1.5	1.4	1.2	2.0	1.7	1.4	2.0	1.7	1.4	2.1	1.7	1.4	2.2	1.8	1.4	2.3	1.8	1.4	2.3	1.8	1.4	2.2	1.8	1.4	34.0
36.0	1.4	1.3	1.2	1.9	1.6	1.3	1.8	1.6	1.3	2.0	1.7	1.3	2.0	1.7	1.3	2.1	1.7	1.4	2.1	1.7	1.4	2.1	1.7	1.4	36.0
38.0	1.3	1.2		1.7	1.5	1.3	1.7	1.5	1.3	1.9	1.6	1.3	1.9	1.6	1.3	2.0	1.6	1.3	2.0	1.6	1.3	2.0	1.6	1.3	38.0
40.0	1.2			1.6	1.4	1.2	1.6	1.4	1.2	1.8	1.5	1.2	1.8	1.5	1.2	1.9	1.6	1.3	1.9	1.6	1.3	1.9	1.5	1.3	40.0
44.0				1.4	1.3		1.4	1.3		1.6	1.3	1.2	1.6	1.3	1.2	1.7	1.4	1.2	1.7	1.4	1.2	1.6	1.4	1.2	44.0
48.0				1.3	1.2		1.3	1.2		1.4	1.2		1.4	1.2		1.5	1.3	1.1	1.5	1.3	1.1	1.5	1.3	1.1	48.0
52.0				1.2			1.1			1.3	1.1		1.3	1.1		1.4	1.2		1.3	1.2		1.3	1.2		52.0
56.0										1.1			1.1			1.2	1.1		1.2	1.1		1.2	1.1		56.0
60.0																			1.1			1.1			60.0
64.0																									64.0
68.0																									68.0
72.0																									72.0
1	0	0	0	46	46	46	0	0	0	92	92	92	46	46	46	92	92	92	46	46	46	0	0	0	1
2	0	0	0	46	46	46	0	0	0	46	46	46	46	46	46	46	46	46	46	46	46	0	0	0	2
3	0	0	0	46	46	46	0	0	0	46	46	46	46	46	46	46	46	46	46	46	46	46	46	46	3
4	0	0	0	0	0	0	46	46	46	0	0	0	46	46	46	46	46	46	46	46	46	92	92	92	4
5	0	0	0	0	0	0	92	92	92	0	0	0	0	0	0	0	0	0	46	46	46	92	92	92	5
ID	1	1	1	66	66	66	17	17	17	67	67	67	54	54	54	55	55	55	49	49	49	19	19	19	ID
[DEG]	0~81	40~85	56~85	25~81	41~85	63~85	26~81	42~85	64~85	26~81	40~85	60~85	26~81	40~85	60~85	35~81	39~85	58~85	26~81	40~85	58~85	27~81	41~85	59~85	[DEG]
	1	1	1	1	1	1	1	1	1	1	1	1	1	1	1	1	1	1	1	1	1	1	1	1	
	8.7t	8.7t	8.7t	8.7t	8.7t	8.7t	8.7t	8.7t	8.7t	8.7t	8.7t	8.7t	8.7t	8.7t	8.7t	8.7t	8.7t	8.7t	8.7t	8.7t	8.7t	8.7t	8.7t	8.7t	

m	43.0	43.0	43.0	43.0	43.0	43.0	47.4	47.4	47.4	47.4	47.4	47.4	51.7	51.7	51.7	51.7	51.7	51.7	56.0	56.0	56.0	60.0	60.0	60.0	m
°	5	20	40	5	20	40	5	20	40	5	20	40	5	20	40	5	20	40	5	20	40	5	20	40	°
3.0																									3.0
3.5																									3.5
4.0																									4.0
4.5																									4.5
5.0																									5.0
6.0																									6.0
7.0																									7.0
8.0																									8.0
9.0																									9.0
10.0																									10.0
11.0																									11.0
12.0																									12.0
14.0																									14.0
16.0	2.7			2.1																					16.0
18.0	2.7			2.1			2.4			2.2			2.2			2.1									18.0
20.0	2.7			2.1			2.4			2.2			2.2			2.1									20.0
22.0	2.7	2.6		2.1	2.1		2.4	2.4		2.2	2.2		2.2			2.1			2.1			1.6			22.0
24.0	2.7	2.5		2.1	2.1		2.4	2.4		2.2	2.2		2.2	2.2		2.1	2.1		2.1	2.1		1.6			24.0
26.0	2.7	2.3		2.1	2.1		2.4	2.3		2.2	2.2		2.2	2.2		2.1	2.1		2.1	2.1		1.6	1.6		26.0
28.0	2.7	2.2		2.1	2.1		2.4	2.2		2.2	2.2		2.2	2.2		2.1	2.1		2.1	2.1		1.6	1.6		28.0
30.0	2.7	2.1	1.6	2.1	2.1		2.4	2.1		2.2	2.1		2.2	2.1		2.1	2.1		2.1	2.1		1.6	1.6		30.0
32.0	2.6	2.0	1.5	2.1	2.0	1.5	2.4	2.0	1.5	2.2	2.0	1.5	2.2	2.0		2.1	2.0		2.1	2.0		1.6	1.6		32.0
34.0	2.5	1.9	1.4	2.1	1.9	1.4	2.4	1.9	1.5	2.2	1.9	1.4	2.2	1.9	1.4	2.1	1.9	1.4	2.1	1.9	1.4	1.6	1.6		34.0
36.0	2.3	1.8	1.4	2.1	1.8	1.4	2.4	1.8	1.4	2.2	1.8	1.4	2.2	1.9	1.4	2.1	1.8	1.4	2.1	1.9	1.4	1.6	1.6	1.2	36.0
38.0	2.2	1.7	1.3	2.1	1.7	1.3	2.3	1.8	1.4	2.2	1.8	1.4	2.2	1.8	1.4	2.1	1.8	1.4	2.1	1.8	1.4	1.6	1.6	1.2	38.0
40.0	2.1	1.7	1.3	2.0	1.6	1.3	2.2	1.7	1.3	2.2	1.7	1.3	2.2	1.7	1.3	2.1	1.7	1.3	2.1	1.7	1.3	1.6	1.6	1.2	40.0
44.0	1.9	1.5	1.2	1.8	1.5	1.2	1.9	1.5	1.2	1.9	1.5	1.2	2.0	1.6	1.2	2.0	1.6	1.2	2.0	1.6	1.2	1.6	1.5	1.1	44.0
48.0	1.7	1.4	1.2	1.6	1.4	1.2	1.8	1.4	1.2	1.7	1.4	1.2	1.8	1.5	1.2	1.8	1.5	1.2	1.8	1.5	1.2	1.6	1.4	1.1	48.0
52.0	1.5	1.3	1.1	1.5	1.3	1.1	1.6	1.3	1.1	1.6	1.3	1.1	1.6	1.4	1.1	1.6	1.4	1.1	1.7	1.4	1.1	1.4	1.3	1.0	52.0
56.0	1.4	1.2		1.3	1.2		1.3	1.2		1.4	1.2		1.3	1.3	1.1	1.5	1.3	1.1	1.3	1.3	1.1	1.2	1.2	1.0	56.0
60.0		1.1		1.2	1.1			1.2		1.2	1.2			1.2		1.2	1.2			1.2	1.1		1.0	0.9	60.0
64.0				1.1	1.1												1.1								64.0
68.0				1.0																					68.0
72.0																									72.0
1	92	92	92	0	0	0	92	92	92	46	46	46	92	92	92	46	46	46	92	92	92	100	100	100	1
2	92	92	92	46	46	46	92	92	92	92	92	92	92	92	92	92	92	92	92	92	92	100	100	100	2
3	46	46	46	92	92	92	92	92	92	92	92	92	92	92	92	92	92	92	92	92	92	100	100	100	3
4	46	46	46	92	92	92	46	46	46	92	92	92	92	92	92	92	92	92	92	92	92	100	100	100	4
5	46	46	46	92	92	92	46	46	46	46	46	46	46	46	46	92	92	92	92	92	92	100	100	100	5
ID	42	42	42	21	21	21	38	38	38	31	31	31	32	32	32	23	23	23	24	24	24	16	16	16	ID
[DEG]	47~81	46~85	60~85	29~81	40~85	61~85	51~81	51~85	64~85	47~81	51~85	64~85	54~81	55~85	63~85	51~81	51~85	63~85	58~81	59~85	62~85	60~81	61~85	65~85	[DEG]
	1	1	1	1	1	1	1	1	1	1	1	1	1	1	1	1	1	1	1	1	1	1	1	1	
	8.7t	8.7t	8.7t	8.7t	8.7t	8.7t	8.7t	8.7t	8.7t	8.7t	8.7t	8.7t	8.7t	8.7t	8.7t	8.7t	8.7t	8.7t	8.7t	8.7t	8.7t	8.7t	8.7t	8.7t	

HLJ	1.0m + 2.8m	28.9 t	8.0m x 6.2m	360 °	JPN

m	12.8	12.8	12.8	25.8	25.8	25.8	25.8	25.8	25.8	30.1	30.1	30.1	30.1	30.1	30.1	34.4	34.4	34.4	34.4	34.4	34.4	34.4	34.4	34.4	m
°	5	20	40	5	20	40	5	20	40	5	20	40	5	20	40	5	20	40	5	20	40	5	20	40	°
3.0		31.6	25.3																						3.0
3.5	38.1	30.3	24.6		31.4			25.0																	3.5
4.0	36.1	29.1	23.9		30.6	23.4		24.2						31.2											4.0
4.5	34.3	28.0	23.3		29.8	23.1		23.3	21.5		30.2			30.4											4.5
5.0	32.7	27.0	22.8		29.0	22.7		22.4	20.6		29.5	22.8		29.8	22.9		29.9			24.9			16.9		5.0
6.0	29.9	25.3	21.8		27.7	22.0		20.5	19.0		28.3	22.2		28.5	22.3		28.9	22.5		24.9	23.0		16.9	16.9	6.0
7.0	27.7	23.8	20.9		26.5	21.3		18.9	17.7		27.1	21.6		27.4	21.7		27.9	22.0		24.9	22.4		16.9	16.9	7.0
8.0	25.7	22.6	20.2	32.0	25.4	20.8	18.6	17.5	16.5		26.1	21.1		26.3	21.2		26.9	21.5		24.3	21.9		16.9	16.7	8.0
9.0	24.1	21.5		30.3	24.4	20.2	17.3	16.3	15.5	32.0	25.2	20.6	32.2	25.4	20.7		26.0	21.0		23.1	20.9		16.2	15.9	9.0
10.0	22.7	20.6		28.7	23.5	19.7	16.1	15.3	14.6	30.1	24.3	20.2	30.7	24.5	20.2		25.2	20.6	24.4	22.1	20.1		15.3	14.9	10.0
11.0	21.5	19.9		27.4	22.7	19.3	15.1	14.4	13.7	27.9	23.6	19.8	29.0	23.7	19.8	26.1	24.4	20.2	23.2	21.1	19.3	14.8	14.4	14.0	11.0
12.0	20.6	19.3		24.5	21.9	18.9	14.2	13.6	13.0	24.0	22.8	19.4	25.0	23.0	19.4	24.4	23.7	19.8	22.1	20.2	18.6	13.9	13.5	13.2	12.0
14.0				18.9	19.1	18.2	12.6	12.2	11.8	18.3	18.6	18.7	19.3	19.6	18.7	18.8	19.1	19.1	20.1	18.7	17.4	12.3	12.1	11.8	14.0
16.0				15.0	15.2	15.4	11.4	11.1	10.8	14.4	14.7	14.9	15.4	15.6	15.8	14.9	15.1	15.4	16.1	16.3	16.3	11.1	10.9	10.6	16.0
18.0				12.1	12.3		10.3	10.0		11.6	11.8	12.0	12.5	12.7	12.9	12.0	12.2	12.4	13.2	13.4	13.5	9.9	9.8	9.7	18.0
20.0				9.9	10.0		9.3	9.2		9.4	9.6		10.3	10.5		9.9	10.0	10.2	11.0	11.1	11.2	8.9	8.8	8.8	20.0
22.0				8.2	8.3		8.5	8.4		7.7	7.8		8.6	8.7		8.1	8.3		9.2	9.3		8.1	8.0		22.0
24.0				6.8			7.9			6.3	6.4		7.2	7.3		6.8	6.9		7.8	7.9		7.4	7.3		24.0
26.0										5.2	5.3		6.1	6.2		5.6	5.7		6.6	6.7		6.8	6.7		26.0
28.0										4.2			5.1			4.7	4.7		5.7	5.7		6.2	6.2		28.0
30.0																3.8			4.9			5.8			30.0
32.0																3.2			4.1			5.4			32.0
34.0																									34.0
36.0																									36.0
38.0																									38.0
40.0																									40.0
44.0																									44.0
48.0																									48.0
52.0																									52.0
56.0																									56.0
60.0																									60.0
64.0																									64.0
68.0																									68.0
72.0																									72.0
1	0	0	0	46	46	46	0	0	0	92	92	92	46	46	46	92	92	92	46	46	46	0	0	0	1
2	0	0	0	46	46	46	0	0	0	46	46	46	46	46	46	46	46	46	46	46	46	0	0	0	2
3	0	0	0	46	46	46	0	0	0	46	46	46	46	46	46	46	46	46	46	46	46	46	46	46	3
4	0	0	0	0	0	0	46	46	46	0	0	0	46	46	46	46	46	46	46	46	46	92	92	92	4
5	0	0	0	0	0	0	92	92	92	0	0	0	0	0	0	0	0	0	46	46	46	92	92	92	5
ID	1	1	1	66	66	66	17	17	17	67	67	67	54	54	54	55	55	55	49	49	49	19	19	19	ID
[DEG]	0~76	34~85	58~85	28~76	37~85	56~85	29~76	38~85	57~85	29~76	37~85	58~85	28~76	36~85	58~85	28~76	40~85	59~85	28~76	41~85	59~85	29~76	41~85	59~85	[DEG]
	5	5	5	4	4	4	3	3	3	4	4	4	4	4	4	4	4	4	3	3	3	2	2	2	
	60t	60t	60t	60t	60t	60t	26t	26t	26t	60t	60t	60t	60t	60t	60t	60t	60t	60t	26t	26t	26t	26t	26t	26t	

m	43.0	43.0	43.0	43.0	43.0	43.0	47.4	47.4	47.4	47.4	47.4	47.4	51.7	51.7	51.7	51.7	51.7	51.7	56.0	56.0	56.0	60.0	60.0	60.0	m
°	5	20	40	5	20	40	5	20	40	5	20	40	5	20	40	5	20	40	5	20	40	5	20	40	°
3.0																									3.0
3.5																									3.5
4.0																									4.0
4.5																									4.5
5.0																									5.0
6.0																									6.0
7.0		17.1	17.1		12.1	12.1		13.9			12.4														7.0
8.0		17.1	17.1		12.1	12.1		13.9	13.9		12.4	12.4		11.1			9.8								8.0
9.0		17.1	17.1		12.1	12.1		13.9	13.9		12.4	12.4		11.1	11.1		9.8	9.8		9.0	9.0		7.8		9.0
10.0		17.1	17.1		12.1	12.1		13.9	13.9		12.4	12.4		11.1	11.1		9.8	9.8		9.0	9.0		7.8	7.8	10.0
11.0		17.1	17.1		12.1	12.1		13.9	13.9		12.4	12.4		11.1	11.1		9.8	9.8		9.0	9.0		7.8	7.8	11.0
12.0		17.1	17.1		12.1	12.1		13.9	13.9		12.4	12.4		11.1	11.1		9.8	9.8		9.0	9.0		7.8	7.8	12.0
14.0	17.1	17.1	17.1	12.1	12.1	12.1		13.9	13.9		12.4	12.4		11.1	11.1		9.8	9.8		9.0	9.0		7.8	7.8	14.0
16.0	15.5	15.8	16.0	11.5	11.4	11.2	13.9	13.9	13.9	12.4	12.4	12.4	11.1	11.1	11.1	9.8	9.8	9.8		9.0	9.0		7.8	7.8	16.0
18.0	12.6	12.8	13.1	10.4	10.3	10.2	12.8	13.0	13.2	12.4	12.1	11.8	11.1	11.1	11.1	9.8	9.8	9.8	9.0	9.0	9.0		7.8	7.8	18.0
20.0	10.4	10.6	10.8	9.5	9.4	9.3	10.5	10.7	10.9	11.2	11.1	10.9	10.8	10.9	11.1	9.8	9.8	9.8	9.0	9.0	9.0	7.8	7.8	7.8	20.0
22.0	8.7	8.8	9.0	8.7	8.6	8.5	8.8	9.0	9.1	9.4	9.6	9.7	9.0	9.2	9.3	9.5	9.4	9.3	9.0	9.0	9.0	7.8	7.8	7.8	22.0
24.0	7.3	7.4	7.5	8.0	7.9	7.8	7.4	7.5	7.7	8.0	8.1	8.3	7.6	7.8	7.9	8.3	8.4	8.5	7.9	8.0	8.2	7.6	7.4	7.3	24.0
26.0	6.1	6.2	6.3	7.4	7.3	7.3	6.2	6.4	6.5	6.9	7.0	7.1	6.5	6.6	6.7	7.1	7.2	7.3	6.7	6.8	7.0	6.7	6.8	6.8	26.0
28.0	5.2	5.3		6.7	6.8		5.3	5.4	5.5	5.9	6.0	6.0	5.5	5.6	5.7	6.1	6.2	6.3	5.8	5.9	6.0	5.7	5.8	5.9	28.0
30.0	4.3	4.4		5.8	5.9		4.4	4.5		5.0	5.1		4.7	4.7	4.8	5.3	5.4	5.5	4.9	5.0	5.1	4.9	5.0	5.1	30.0
32.0	3.6	3.7		5.1	5.2		3.7	3.8		4.3	4.4		3.9	4.0		4.6	4.7		4.2	4.3	4.4	4.2	4.3	4.4	32.0
34.0	3.0	3.1		4.5	4.5		3.1	3.2		3.7	3.8		3.3	3.4		4.0	4.0		3.6	3.7		3.6	3.6	3.7	34.0
36.0	2.4	2.5		3.9	4.0		2.6	2.6		3.2	3.2		2.8	2.8		3.4	3.5		3.0	3.1		3.0	3.1		36.0
38.0	1.9			3.5			2.0	2.1		2.7	2.7		2.3	2.3		2.9	3.0		2.6	2.6		2.5	2.6		38.0
40.0	1.5			3.0			1.6	1.6		2.2	2.3		1.8	1.9		2.5	2.5		2.1	2.2		2.1	2.1		40.0
44.0										1.4						1.7			1.3	1.3		1.3	1.3		44.0
48.0																									48.0
52.0																									52.0
56.0																									56.0
60.0																									60.0
64.0																									64.0
68.0																									68.0
72.0																									72.0
1	92	92	92	0	0	0	92	92	92	46	46	46	92	92	92	46	46	46	92	92	92	100	100	100	1
2	92	92	92	46	46	46	92	92	92	92	92	92	92	92	92	92	92	92	92	92	92	100	100	100	2
3	46	46	46	92	92	92	92	92	92	92	92	92	92	92	92	92	92	92	92	92	92	100	100	100	3
4	46	46	46	92	92	92	46	46	46	92	92	92	92	92	92	92	92	92	92	92	92	100	100	100	4
5	46	46	46	92	92	92	46	46	46	46	46	46	46	46	46	92	92	92	92	92	92	100	100	100	5
ID	42	42	42	21	21	21	38	38	38	31	31	31	32	32	32	23	23	23	24	24	24	16	16	16	ID
[DEG]	28~76	39~85	58~85	28~76	39~85	58~85	37~76	38~85	59~85	28~76	38~85	59~85	44~76	45~85	60~85	37~76	45~85	60~85	43~76	44~85	61~85	48~76	48~85	61~85	[DEG]
	2	2	2	2	2	2	2	2	2	2	2	2	2	2	2	2	2	2	2	2	2	2	2	2	
	26t	26t	26t	26t	26t	26t	26t	26t	26t	26t	26t	26t	26t	26t	26t	26t	26t	26t	26t	26t	26t	26t	26t	26t	

油圧チルトジブ

HLJ	1.0m + 9.2m	28.9 t	8.0m x 6.2m	360 °	JPN

m	12.8	12.8	12.8	25.8	25.8	25.8	25.8	25.8	25.8	30.1	30.1	30.1	30.1	30.1	30.1	34.4	34.4	34.4	34.4	34.4	34.4	34.4	34.4	34.4	m
°	5	20	40	5	20	40	5	20	40	5	20	40	5	20	40	5	20	40	5	20	40	5	20	40	°
3.0																									3.0
3.5																									3.5
4.0	15.0																								4.0
4.5	15.0																								4.5
5.0	15.0	13.5																							5.0
6.0	15.0	12.4			14.4			14.1																	6.0
7.0	14.8	11.4	8.9	15.0	13.5		14.3	13.3			13.6			13.8			13.8			13.4					7.0
8.0	13.4	10.6	8.4	15.0	12.8		14.3	12.5		15.0	12.9		15.0	13.1			13.2			13.3			10.1		8.0
9.0	12.2	9.9	8.0	15.0	12.1	8.7	14.0	11.9	8.6	15.0	12.3	8.8	15.0	12.5	8.8	15.0	12.6		13.4	12.7			10.1		9.0
10.0	11.2	9.2	7.6	15.0	11.5	8.4	13.2	11.3	8.4	15.0	11.8	8.5	15.0	11.9	8.6	15.0	12.1	8.6	13.4	12.2	8.6	10.1	10.1		10.0
11.0	10.4	8.7	7.3	15.0	10.9	8.2	12.5	10.8	8.1	15.0	11.3	8.3	15.0	11.4	8.3	15.0	11.6	8.4	13.4	11.7	8.4	10.1	10.1	8.3	11.0
12.0	9.6	8.2	7.0	14.2	10.4	7.9	11.7	10.3	7.9	15.0	10.8	8.1	15.0	10.9	8.1	15.0	11.1	8.2	13.4	11.2	8.2	10.1	10.1	8.1	12.0
14.0	8.4	7.4	6.5	12.6	9.6	7.5	10.3	9.4	7.4	13.5	10.0	7.7	13.7	10.1	7.7	14.4	10.3	7.8	13.4	10.4	7.8	10.1	9.9	7.8	14.0
16.0	7.5	6.8		11.3	8.9	7.1	9.1	8.4	7.1	12.2	9.3	7.3	12.3	9.3	7.3	13.1	9.7	7.5	13.2	9.7	7.5	9.7	9.2	7.4	16.0
18.0	6.8			10.2	8.3	6.8	8.1	7.6	6.8	11.1	8.7	7.0	11.2	8.7	7.0	11.9	9.1	7.2	12.0	9.1	7.2	8.7	8.4	7.1	18.0
20.0				9.3	7.7	6.5	7.3	6.9	6.5	10.2	8.2	6.7	10.2	8.2	6.8	10.6	8.6	6.9	11.0	8.6	6.9	7.8	7.6	6.9	20.0
22.0				8.6	7.3	6.3	6.7	6.3	6.1	8.6	7.7	6.5	9.4	7.8	6.5	8.9	8.1	6.7	9.8	8.2	6.7	7.1	6.9	6.7	22.0
24.0				7.9	6.9		6.1	5.8		7.2	7.3	6.3	8.0	7.4	6.3	7.5	7.7	6.5	8.3	7.7	6.5	6.4	6.3	6.2	24.0
26.0				6.7	6.6		5.6	5.4		6.1	6.5		6.9	7.0		6.3	6.7	6.3	7.2	7.4	6.3	5.9	5.8	5.7	26.0
28.0				5.7	6.0		5.2	5.0		5.1	5.5		5.9	6.2		5.4	5.7		6.2	6.5		5.4	5.3		28.0
30.0				4.9			4.8			4.3	4.6		5.1	5.3		4.6	4.9		5.4	5.6		5.0	4.9		30.0
32.0										3.6	3.8		4.4	4.6		3.8	4.1		4.7	4.9		4.6	4.6		32.0
34.0										3.0			3.8			3.2	3.5		4.0	4.2		4.3	4.3		34.0
36.0																2.7			3.5			4.0			36.0
38.0																2.1			3.0			3.7			38.0
40.0																									40.0
44.0																									44.0
48.0																									48.0
52.0																									52.0
56.0																									56.0
60.0																									60.0
64.0																									64.0
68.0																									68.0
72.0																									72.0
1	0	0	0	46	46	46	0	0	0	92	92	92	46	46	46	92	92	92	46	46	46	0	0	0	1
2	0	0	0	46	46	46	0	0	0	46	46	46	46	46	46	46	46	46	46	46	46	0	0	0	2
3	0	0	0	46	46	46	0	0	0	46	46	46	46	46	46	46	46	46	46	46	46	46	46	46	3
4	0	0	0	0	0	0	46	46	46	0	0	0	46	46	46	46	46	46	46	46	46	92	92	92	4
5	0	0	0	0	0	0	92	92	92	0	0	0	0	0	0	0	0	0	46	46	46	92	92	92	5
ID	1	1	1	66	66	66	17	17	17	67	67	67	54	54	54	55	55	55	49	49	49	19	19	19	ID
[DEG]	0~79	44~85	57~85	27~79	37~85	56~85	28~79	38~85	57~85	27~79	36~85	58~85	27~79	36~85	57~85	27~79	40~85	58~85	27~79	40~85	59~85	28~79	41~85	59~85	[DEG]
	2	2	2	2	2	2	2	2	2	2	2	2	2	2	2	2	2	2	2	2	2	2	2	2	
	26t	26t	26t	26t	26t	26t	26t	26t	26t	26t	26t	26t	26t	26t	26t	26t	26t	26t	26t	26t	26t	26t	26t	26t	

m	43.0	43.0	43.0	43.0	43.0	43.0	47.4	47.4	47.4	47.4	47.4	47.4	51.7	51.7	51.7	51.7	51.7	51.7	56.0	56.0	56.0	60.0	60.0	60.0	m
°	5	20	40	5	20	40	5	20	40	5	20	40	5	20	40	5	20	40	5	20	40	5	20	40	°
3.0																									3.0
3.5																									3.5
4.0																									4.0
4.5																									4.5
5.0																									5.0
6.0																									6.0
7.0																									7.0
8.0																									8.0
9.0		10.6			7.2																				9.0
10.0		10.6			7.2			8.4			7.5														10.0
11.0		10.6			7.2			8.4			7.5			7.0			6.4			6.4					11.0
12.0	10.6	10.6	8.3	7.2	7.2	7.2		8.4			7.5			7.0			6.4			6.4			5.7		12.0
14.0	10.6	10.6	7.9	7.2	7.2	7.2	8.4	8.4	8.0	7.5	7.5	7.5		7.0	7.0	6.4	6.4	6.4		6.4			5.7		14.0
16.0	10.6	10.2	7.6	7.2	7.2	7.2	8.4	8.4	7.7	7.5	7.5	7.5	7.0	7.0	7.0	6.4	6.4	6.4	6.4	6.4	6.4		5.7	5.7	16.0
18.0	10.6	9.6	7.4	7.2	7.2	7.2	8.4	8.4	7.4	7.5	7.5	7.5	7.0	7.0	7.0	6.4	6.4	6.4	6.4	6.4	6.4	5.7	5.7	5.7	18.0
20.0	10.6	9.2	7.1	7.2	7.2	7.1	8.4	8.4	7.2	7.5	7.5	7.2	7.0	7.0	7.0	6.4	6.4	6.4	6.4	6.4	6.4	5.7	5.7	5.7	20.0
22.0	9.1	8.7	6.9	7.2	7.2	6.9	8.4	8.4	7.0	7.5	7.5	7.0	7.0	7.0	7.0	6.4	6.4	6.4	6.4	6.4	6.4	5.7	5.7	5.7	22.0
24.0	7.7	8.1	6.7	7.2	7.0	6.7	7.8	8.3	6.8	7.5	7.5	6.8	7.0	7.0	6.9	6.4	6.4	6.4	6.4	6.4	6.4	5.7	5.7	5.5	24.0
26.0	6.5	6.9	6.6	6.8	6.6	6.4	6.7	7.1	6.6	7.2	7.5	6.7	6.8	7.0	6.7	6.4	6.4	6.4	6.4	6.4	6.4	5.5	5.4	5.2	26.0
28.0	5.5	5.9	6.3	6.3	6.2	6.0	5.7	6.1	6.5	6.2	6.6	6.5	5.8	6.2	6.6	6.4	6.4	6.2	6.1	6.4	6.2	5.4	5.1	4.9	28.0
30.0	4.7	5.0	5.4	5.8	5.7	5.6	4.9	5.2	5.6	5.4	5.7	6.1	5.0	5.4	5.7	5.6	5.9	5.9	5.2	5.6	5.9	5.0	4.8	4.6	30.0
32.0	4.0	4.3	4.6	5.3	5.3	5.3	4.2	4.5	4.8	4.7	5.0	5.3	4.3	4.6	4.9	4.9	5.2	5.5	4.5	4.8	5.1	4.5	4.5	4.3	32.0
34.0	3.4	3.7		4.8	4.9		3.5	3.8	4.1	4.1	4.3	4.6	3.7	4.0	4.3	4.2	4.5	4.8	3.9	4.2	4.5	3.8	4.1	4.1	34.0
36.0	2.8	3.1		4.3	4.4		3.0	3.2		3.5	3.7		3.1	3.4	3.6	3.7	3.9	4.2	3.3	3.6	3.9	3.3	3.6	3.8	36.0
38.0	2.3	2.6		3.8	3.9		2.5	2.7		3.0	3.2		2.6	2.9		3.2	3.4		2.8	3.1	3.3	2.8	3.0	3.3	38.0
40.0	1.8	2.1		3.3	3.5		2.0	2.2		2.6	2.8		2.1	2.4		2.8	3.0		2.4	2.6		2.3	2.6	2.8	40.0
44.0				2.6			1.1	1.3		1.8	1.9		1.3	1.5		2.0	2.2		1.5	1.8		1.5	1.7		44.0
48.0				2.0						1.0						1.3	1.4								48.0
52.0																									52.0
56.0																									56.0
60.0																									60.0
64.0																									64.0
68.0																									68.0
72.0																									72.0
1	92	92	92	0	0	0	92	92	92	46	46	46	92	92	92	46	46	46	92	92	92	100	100	100	1
2	92	92	92	46	46	46	92	92	92	92	92	92	92	92	92	92	92	92	92	92	92	100	100	100	2
3	46	46	46	92	92	92	92	92	92	92	92	92	92	92	92	92	92	92	92	92	92	100	100	100	3
4	46	46	46	92	92	92	46	46	46	92	92	92	92	92	92	92	92	92	92	92	92	100	100	100	4
5	46	46	46	92	92	92	46	46	46	46	46	46	46	46	46	92	92	92	92	92	92	100	100	100	5
ID	42	42	42	21	21	21	38	38	38	31	31	31	32	32	32	23	23	23	24	24	24	16	16	16	ID
[DEG]	40~79	42~85	58~85	22~79	43~85	58~85	39~79	42~85	59~85	32~79	42~85	59~85	45~79	47~85	60~85	39~79	41~85	60~85	50~79	52~85	61~85	53~79	55~85	61~85	[DEG]
	2	2	2	1	1	1	1	1	1	1	1	1	1	1	1	1	1	1	1	1	1	1	1	1	
	26t	26t	26t	8.7t	8.7t	8.7t	8.7t	8.7t	8.7t	8.7t	8.7t	8.7t	8.7t	8.7t	8.7t	8.7t	8.7t	8.7t	8.7t	8.7t	8.7t	8.7t	8.7t	8.7t	

HLJ	1.0m + 17.0m	28.9 t	8.0m x 6.2m	360 °	JPN

m	12.8	12.8	12.8	25.8	25.8	25.8	25.8	25.8	25.8	30.1	30.1	30.1	30.1	30.1	30.1	34.4	34.4	34.4	34.4	34.4	34.4	34.4	34.4	34.4	m
°	5	20	40	5	20	40	5	20	40	5	20	40	5	20	40	5	20	40	5	20	40	5	20	40	°
3.0																									3.0
3.5																									3.5
4.0																									4.0
4.5																									4.5
5.0																									5.0
6.0	7.3																								6.0
7.0	6.8																								7.0
8.0	6.4	5.4		7.0			5.6																		8.0
9.0	6.0	5.1		6.7			5.6			6.7			6.5												9.0
10.0	5.7	4.8		6.4	5.0		5.6	4.8		6.5			6.3			6.3			5.9			4.6			10.0
11.0	5.3	4.6		6.1	4.8		5.6	4.6		6.2	4.9		6.1	4.8		6.1	4.8		5.9	4.7		4.6			11.0
12.0	5.1	4.4		5.8	4.7		5.5	4.5		6.0	4.7		5.9	4.6		5.9	4.7		5.7	4.6		4.6	4.4		12.0
14.0	4.6	4.0	3.5	5.4	4.4		5.1	4.2		5.5	4.4		5.4	4.4		5.5	4.4		5.4	4.3		4.6	4.2		14.0
16.0	4.2	3.7	3.3	5.0	4.1	3.4	4.8	3.9	3.3	5.1	4.2	3.4	5.1	4.1	3.4	5.2	4.2	3.4	5.1	4.1		4.6	4.0		16.0
18.0	3.8	3.4	3.1	4.6	3.9	3.3	4.4	3.7	3.2	4.8	3.9	3.3	4.8	3.9	3.3	4.9	3.9	3.3	4.8	3.9	3.2	4.6	3.8	3.2	18.0
20.0	3.5	3.2	3.0	4.3	3.7	3.1	4.2	3.5	3.1	4.5	3.7	3.2	4.5	3.7	3.2	4.6	3.8	3.2	4.5	3.7	3.1	4.3	3.6	3.1	20.0
22.0	3.3	3.1	2.9	4.1	3.5	3.0	3.9	3.4	3.0	4.3	3.6	3.1	4.2	3.5	3.0	4.3	3.6	3.1	4.3	3.5	3.0	4.1	3.5	3.0	22.0
24.0	3.1	2.9		3.8	3.3	2.9	3.7	3.2	2.9	4.0	3.4	3.0	4.0	3.4	2.9	4.1	3.5	3.0	4.0	3.4	2.9	3.9	3.3	2.9	24.0
26.0	3.0			3.6	3.2	2.9	3.5	3.1	2.8	3.8	3.3	2.9	3.8	3.2	2.9	3.9	3.3	2.9	3.8	3.3	2.9	3.7	3.2	2.8	26.0
28.0				3.5	3.1	2.8	3.4	3.0	2.7	3.6	3.2	2.8	3.6	3.1	2.8	3.7	3.2	2.8	3.7	3.2	2.8	3.6	3.1	2.7	28.0
30.0				3.3	3.0		3.2	2.9		3.5	3.0	2.8	3.4	3.0	2.7	3.6	3.1	2.8	3.5	3.1	2.7	3.4	3.0	2.7	30.0
32.0				3.2	2.9		3.1	2.8		3.3	2.9	2.7	3.3	2.9	2.7	3.4	3.0	2.7	3.4	3.0	2.7	3.3	2.9	2.6	32.0
34.0				3.0	2.8		3.0	2.7		3.2	2.9		3.2	2.8		3.3	2.9	2.7	3.3	2.9	2.6	3.2	2.8	2.6	34.0
36.0				2.9	2.7		2.9	2.7		3.1	2.8		3.1	2.8		3.2	2.8		3.1	2.8		3.1	2.7		36.0
38.0				2.9			2.8			2.9	2.7		3.0	2.7		3.0	2.8		3.0	2.7		3.0	2.7		38.0
40.0										2.4			2.9			2.6	2.7		2.9	2.7		2.9	2.6		40.0
44.0																1.8			2.5			2.6			44.0
48.0																									48.0
52.0																									52.0
56.0																									56.0
60.0																									60.0
64.0																									64.0
68.0																									68.0
72.0																									72.0
1	0	0	0	46	46	46	0	0	0	92	92	92	46	46	46	92	92	92	46	46	46	0	0	0	1
2	0	0	0	46	46	46	0	0	0	46	46	46	46	46	46	46	46	46	46	46	46	0	0	0	2
3	0	0	0	46	46	46	0	0	0	46	46	46	46	46	46	46	46	46	46	46	46	46	46	46	3
4	0	0	0	0	0	0	46	46	46	0	0	0	46	46	46	46	46	46	46	46	46	92	92	92	4
5	0	0	0	0	0	0	92	92	92	0	0	0	0	0	0	0	0	0	46	46	46	92	92	92	5
ID	1	1	1	66	66	66	17	17	17	67	67	67	54	54	54	55	55	55	49	49	49	19	19	19	ID
[DEG]	0~81	41~85	56~85	25~81	36~85	59~85	26~81	37~85	60~85	31~81	40~85	57~85	31~81	40~85	57~85	31~81	43~85	58~85	31~81	44~85	58~85	32~81	44~85	58~85	[DEG]
	1	1	1	1	1	1	1	1	1	1	1	1	1	1	1	1	1	1	1	1	1	1	1	1	
	8.7t	8.7t	8.7t	8.7t	8.7t	8.7t	8.7t	8.7t	8.7t	8.7t	8.7t	8.7t	8.7t	8.7t	8.7t	8.7t	8.7t	8.7t	8.7t	8.7t	8.7t	8.7t	8.7t	8.7t	

m	43.0	43.0	43.0	43.0	43.0	43.0	47.4	47.4	47.4	47.4	47.4	47.4	51.7	51.7	51.7	51.7	51.7	51.7	56.0	56.0	56.0	60.0	60.0	60.0	m
°	5	20	40	5	20	40	5	20	40	5	20	40	5	20	40	5	20	40	5	20	40	5	20	40	°
3.0																									3.0
3.5																									3.5
4.0																									4.0
4.5																									4.5
5.0																									5.0
6.0																									6.0
7.0																									7.0
8.0																									8.0
9.0																									9.0
10.0																									10.0
11.0																									11.0
12.0	5.5			4.1																					12.0
14.0	5.4	4.3		4.1	4.1		4.7	4.2		4.3	4.2		4.1			3.9									14.0
16.0	5.1	4.1		4.1	3.9		4.7	4.1		4.3	4.0		4.1	4.0		3.9	3.9		3.9	3.8		3.6	3.6		16.0
18.0	4.8	3.9	3.2	4.1	3.8		4.7	3.9		4.3	3.8		4.1	3.8		3.9	3.7		3.9	3.7		3.6	3.6		18.0
20.0	4.6	3.8	3.1	4.1	3.6	3.1	4.6	3.7	3.1	4.3	3.7	3.1	4.1	3.7	3.1	3.9	3.6	3.0	3.9	3.6		3.6	3.5		20.0
22.0	4.4	3.6	3.0	4.1	3.5	3.0	4.4	3.6	3.0	4.3	3.5	3.0	4.1	3.5	3.0	3.9	3.5	2.9	3.9	3.5	2.9	3.6	3.4	2.9	22.0
24.0	4.2	3.5	3.0	4.0	3.3	2.9	4.2	3.5	2.9	4.1	3.4	2.9	4.1	3.4	2.9	3.9	3.4	2.9	3.9	3.3	2.9	3.6	3.3	2.8	24.0
26.0	4.0	3.3	2.9	3.8	3.2	2.8	4.0	3.3	2.9	3.9	3.3	2.8	4.0	3.3	2.8	3.8	3.2	2.8	3.8	3.2	2.8	3.6	3.2	2.8	26.0
28.0	3.8	3.2	2.8	3.7	3.1	2.7	3.9	3.2	2.8	3.8	3.2	2.8	3.8	3.2	2.8	3.7	3.1	2.7	3.7	3.1	2.7	3.6	3.1	2.7	28.0
30.0	3.7	3.1	2.8	3.5	3.0	2.7	3.7	3.1	2.7	3.6	3.1	2.7	3.7	3.1	2.7	3.6	3.1	2.7	3.6	3.1	2.7	3.5	3.0	2.6	30.0
32.0	3.5	3.0	2.7	3.4	2.9	2.6	3.6	3.0	2.7	3.5	3.0	2.7	3.5	3.0	2.7	3.5	3.0	2.6	3.5	3.0	2.6	3.4	2.9	2.6	32.0
34.0	3.4	2.9	2.6	3.3	2.9	2.6	3.5	3.0	2.6	3.4	2.9	2.6	3.4	2.9	2.6	3.4	2.9	2.6	3.4	2.9	2.6	3.3	2.9	2.5	34.0
36.0	3.3	2.9	2.6	3.2	2.8	2.5	3.3	2.9	2.6	3.3	2.8	2.6	3.3	2.9	2.6	3.3	2.8	2.5	3.3	2.8	2.5	3.2	2.8	2.5	36.0
38.0	3.0	2.8	2.6	3.1	2.7	2.5	3.0	2.8	2.5	3.2	2.8	2.5	3.0	2.8	2.5	3.2	2.7	2.5	3.2	2.8	2.5	3.1	2.7	2.5	38.0
40.0	2.6	2.7		3.0	2.6		2.5	2.7	2.5	3.0	2.7	2.5	2.6	2.7	2.5	3.1	2.7	2.4	2.7	2.7	2.4	2.7	2.7	2.4	40.0
44.0	1.8	2.1		2.8	2.5		1.7	2.1		2.2	2.5		1.8	2.2	2.4	2.3	2.6	2.4	2.0	2.3	2.4	1.9	2.3	2.3	44.0
48.0		1.4		2.3	2.5			1.4		1.6	1.8		1.1	1.5		1.7	2.0		1.3	1.6		1.2	1.6	1.9	48.0
52.0				1.8							1.2					1.1	1.4								52.0
56.0																									56.0
60.0																									60.0
64.0																									64.0
68.0																									68.0
72.0																									72.0
1	92	92	92	0	0	0	92	92	92	46	46	46	92	92	92	46	46	46	92	92	92	100	100	100	1
2	92	92	92	46	46	46	92	92	92	92	92	92	92	92	92	92	92	92	92	92	92	100	100	100	2
3	46	46	46	92	92	92	92	92	92	92	92	92	92	92	92	92	92	92	92	92	92	100	100	100	3
4	46	46	46	92	92	92	46	46	46	92	92	92	92	92	92	92	92	92	92	92	92	100	100	100	4
5	46	46	46	92	92	92	46	46	46	46	46	46	46	46	46	92	92	92	92	92	92	100	100	100	5
ID	42	42	42	21	21	21	38	38	38	31	31	31	32	32	32	23	23	23	24	24	24	16	16	16	ID
[DEG]	45~81	42~85	60~85	32~81	43~85	60~85	49~81	47~85	61~85	44~81	41~85	61~85	48~81	52~85	60~85	44~81	47~85	60~85	52~81	56~85	63~85	56~81	59~85	61~85	[DEG]
	1	1	1	1	1	1	1	1	1	1	1	1	1	1	1	1	1	1	1	1	1	1	1	1	
	8.7t	8.7t	8.7t	8.7t	8.7t	8.7t	8.7t	8.7t	8.7t	8.7t	8.7t	8.7t	8.7t	8.7t	8.7t	8.7t	8.7t	8.7t	8.7t	8.7t	8.7t	8.7t	8.7t	8.7t	

油圧チルトジブ

HLJ	1.0m + 24.0m	28.9 t	8.0m x 6.2m	360 °	JPN

m	12.8	12.8	12.8	25.8	25.8	25.8	25.8	25.8	25.8	30.1	30.1	30.1	30.1	30.1	30.1	34.4	34.4	34.4	34.4	34.4	34.4	34.4	34.4	34.4	m
°	5	20	40	5	20	40	5	20	40	5	20	40	5	20	40	5	20	40	5	20	40	5	20	40	°
3.0																									3.0
3.5																									3.5
4.0																									4.0
4.5																									4.5
5.0																									5.0
6.0																									6.0
7.0																									7.0
8.0	5.1																								8.0
9.0	5.1																								9.0
10.0	5.1			4.9			3.7																		10.0
11.0	5.1			4.9			3.7			4.6			4.3												11.0
12.0	5.1	4.5		4.9			3.7			4.6			4.3			4.2			4.0			3.2			12.0
14.0	4.8	4.0		4.9	4.4		3.7	3.7		4.6	4.4		4.3	4.3		4.2			4.0			3.2			14.0
16.0	4.3	3.6		4.9	4.1		3.7	3.7		4.6	4.1		4.3	4.1		4.2	4.1		4.0	4.0		3.2	3.2		16.0
18.0	3.8	3.3		4.6	3.8		3.7	3.7		4.6	3.8		4.3	3.9		4.2	3.9		4.0	3.8		3.2	3.2		18.0
20.0	3.4	3.0	2.6	4.3	3.5		3.7	3.4		4.4	3.6		4.3	3.6		4.2	3.6		4.0	3.7		3.2	3.2		20.0
22.0	3.1	2.7	2.4	4.1	3.2	2.6	3.7	3.2	2.5	4.2	3.3	2.6	4.2	3.4	2.6	4.2	3.4	2.6	4.0	3.4		3.2	3.2		22.0
24.0	2.8	2.5	2.2	3.7	3.0	2.4	3.7	3.0	2.4	4.0	3.1	2.5	4.0	3.1	2.5	4.0	3.2	2.5	3.9	3.2	2.5	3.2	3.2	2.5	24.0
26.0	2.6	2.3	2.1	3.5	2.8	2.3	3.4	2.8	2.3	3.7	2.9	2.4	3.7	3.0	2.4	3.9	3.0	2.4	3.8	3.1	2.4	3.2	3.0	2.4	26.0
28.0	2.4	2.2	2.0	3.2	2.7	2.2	3.2	2.6	2.2	3.4	2.8	2.3	3.4	2.8	2.3	3.6	2.9	2.3	3.6	2.9	2.3	3.2	2.8	2.3	28.0
30.0	2.2	2.0		3.0	2.5	2.1	2.9	2.5	2.1	3.2	2.6	2.2	3.2	2.6	2.2	3.4	2.7	2.2	3.4	2.7	2.2	3.2	2.7	2.2	30.0
32.0	2.0	1.9		2.8	2.4	2.0	2.8	2.4	2.0	3.0	2.5	2.1	3.0	2.5	2.1	3.2	2.6	2.1	3.2	2.6	2.1	3.1	2.6	2.1	32.0
34.0				2.6	2.3	2.0	2.6	2.3	2.0	2.8	2.4	2.0	2.8	2.4	2.0	3.0	2.5	2.1	3.0	2.5	2.1	3.0	2.5	2.1	34.0
36.0				2.5	2.2	1.9	2.4	2.1	1.9	2.6	2.3	2.0	2.7	2.3	2.0	2.8	2.4	2.0	2.8	2.4	2.0	2.8	2.4	2.0	36.0
38.0				2.3	2.1		2.3	2.1		2.5	2.2	1.9	2.5	2.2	1.9	2.7	2.3	1.9	2.7	2.3	1.9	2.6	2.3	1.9	38.0
40.0				2.2	2.0		2.2	2.0		2.4	2.1		2.4	2.1		2.5	2.2	1.9	2.5	2.2	1.9	2.5	2.2	1.9	40.0
44.0				2.0			2.0			2.1	1.9		2.1	1.9		2.1	2.0		2.3	2.0		2.3	2.0		44.0
48.0										1.4			2.0			1.5	1.8		2.1	1.9		2.0	1.9		48.0
52.0																			1.5			1.8			52.0
56.0																									56.0
60.0																									60.0
64.0																									64.0
68.0																									68.0
72.0																									72.0
1	0	0	0	46	46	46	0	0	0	92	92	92	46	46	46	92	92	92	46	46	46	0	0	0	1
2	0	0	0	46	46	46	0	0	0	46	46	46	46	46	46	46	46	46	46	46	46	0	0	0	2
3	0	0	0	46	46	46	0	0	0	46	46	46	46	46	46	46	46	46	46	46	46	46	46	46	3
4	0	0	0	0	0	0	46	46	46	0	0	0	46	46	46	46	46	46	46	46	46	92	92	92	4
5	0	0	0	0	0	0	92	92	92	0	0	0	0	0	0	0	0	0	46	46	46	92	92	92	5
ID	1	1	1	66	66	66	17	17	17	67	67	67	54	54	54	55	55	55	49	49	49	19	19	19	ID
[DEG]	0~81	37~85	59~85	28~81	44~85	57~85	29~81	45~85	58~85	28~81	43~85	59~85	29~81	43~85	59~85	37~81	41~85	59~85	28~81	42~85	59~85	30~81	43~85	60~85	[DEG]
	1	1	1	1	1	1	1	1	1	1	1	1	1	1	1	1	1	1	1	1	1	1	1	1	
	8.7t	8.7t	8.7t	8.7t	8.7t	8.7t	8.7t	8.7t	8.7t	8.7t	8.7t	8.7t	8.7t	8.7t	8.7t	8.7t	8.7t	8.7t	8.7t	8.7t	8.7t	8.7t	8.7t	8.7t	

m	43.0	43.0	43.0	43.0	43.0	43.0	47.4	47.4	47.4	47.4	47.4	47.4	51.7	51.7	51.7	51.7	51.7	51.7	56.0	56.0	56.0	60.0	60.0	60.0	m
°	5	20	40	5	20	40	5	20	40	5	20	40	5	20	40	5	20	40	5	20	40	5	20	40	°
3.0																									3.0
3.5																									3.5
4.0																									4.0
4.5																									4.5
5.0																									5.0
6.0																									6.0
7.0																									7.0
8.0																									8.0
9.0																									9.0
10.0																									10.0
11.0																									11.0
12.0																									12.0
14.0	3.8			2.9																					14.0
16.0	3.8			2.9			3.3			3.1			3.0			2.9									16.0
18.0	3.8	3.8		2.9	2.9		3.3	3.3		3.1	3.1		3.0	3.0		2.9			2.9						18.0
20.0	3.8	3.6		2.9	2.9		3.3	3.3		3.1	3.1		3.0	3.0		2.9	2.9		2.9	2.9		2.4			20.0
22.0	3.8	3.5		2.9	2.9		3.3	3.3		3.1	3.1		3.0	3.0		2.9	2.9		2.9	2.9		2.4	2.4		22.0
24.0	3.8	3.3	2.5	2.9	2.9		3.3	3.3		3.1	3.1		3.0	3.0		2.9	2.9		2.9	2.9		2.4	2.4		24.0
26.0	3.8	3.2	2.4	2.9	2.9	2.4	3.3	3.2	2.4	3.1	3.1	2.4	3.0	3.0		2.9	2.9		2.9	2.9		2.4	2.4		26.0
28.0	3.7	3.0	2.3	2.9	2.9	2.3	3.3	3.0	2.3	3.1	3.0	2.3	3.0	3.0	2.3	2.9	2.9	2.3	2.9	2.9	2.3	2.4	2.4		28.0
30.0	3.5	2.9	2.3	2.9	2.8	2.2	3.3	2.9	2.3	3.1	2.9	2.3	3.0	2.9	2.3	2.9	2.9	2.3	2.9	2.9	2.3	2.4	2.4	2.0	30.0
32.0	3.4	2.8	2.2	2.9	2.7	2.2	3.3	2.8	2.2	3.1	2.8	2.2	3.0	2.8	2.2	2.9	2.8	2.2	2.9	2.8	2.2	2.4	2.4	2.0	32.0
34.0	3.3	2.6	2.1	2.9	2.6	2.1	3.3	2.7	2.1	3.1	2.7	2.1	3.0	2.7	2.2	2.9	2.7	2.2	2.9	2.8	2.2	2.4	2.4	1.9	34.0
36.0	3.1	2.5	2.1	2.9	2.5	2.1	3.2	2.6	2.1	3.1	2.6	2.1	3.0	2.6	2.1	2.9	2.6	2.1	2.9	2.7	2.1	2.4	2.4	1.9	36.0
38.0	3.0	2.4	2.0	2.9	2.4	2.0	3.1	2.5	2.0	3.1	2.5	2.0	3.0	2.5	2.0	2.9	2.5	2.1	2.9	2.6	2.1	2.4	2.3	1.9	38.0
40.0	2.8	2.3	2.0	2.8	2.3	2.0	2.8	2.4	2.0	2.9	2.4	2.0	2.8	2.4	2.0	2.9	2.4	2.0	2.9	2.5	2.0	2.4	2.3	1.8	40.0
44.0	2.1	2.2	1.9	2.6	2.2	1.9	2.0	2.2	1.9	2.4	2.2	1.9	2.0	2.3	1.9	2.5	2.3	1.9	2.1	2.3	1.9	2.0	2.1	1.7	44.0
48.0	1.4	1.8		2.3	2.0		1.3	1.8	1.8	1.8	2.1	1.8	1.3	1.8	1.9	1.8	2.2	1.9	1.4	1.9	1.9	1.4	1.9	1.7	48.0
52.0		1.2		1.9	1.9			1.1		1.2	1.5			1.2		1.3	1.6			1.3	1.7		1.2	1.6	52.0
56.0				1.4	1.6												1.1								56.0
60.0																									60.0
64.0																									64.0
68.0																									68.0
72.0																									72.0
1	92	92	92	0	0	0	92	92	92	46	46	46	92	92	92	46	46	46	92	92	92	100	100	100	1
2	92	92	92	46	46	46	92	92	92	92	92	92	92	92	92	92	92	92	92	92	92	100	100	100	2
3	46	46	46	92	92	92	92	92	92	92	92	92	92	92	92	92	92	92	92	92	92	100	100	100	3
4	46	46	46	92	92	92	46	46	46	92	92	92	92	92	92	92	92	92	92	92	92	100	100	100	4
5	46	46	46	92	92	92	46	46	46	46	46	46	46	46	46	92	92	92	92	92	92	100	100	100	5
ID	42	42	42	21	21	21	38	38	38	31	31	31	32	32	32	23	23	23	24	24	24	16	16	16	ID
[DEG]	48~81	47~85	61~85	38~81	41~85	62~85	52~81	51~85	60~85	47~81	52~85	60~85	55~81	55~85	64~85	52~81	51~85	64~85	59~81	59~85	62~85	61~81	61~85	65~85	[DEG]
	1	1	1	1	1	1	1	1	1	1	1	1	1	1	1	1	1	1	1	1	1	1	1	1	
	8.7t	8.7t	8.7t	8.7t	8.7t	8.7t	8.7t	8.7t	8.7t	8.7t	8.7t	8.7t	8.7t	8.7t	8.7t	8.7t	8.7t	8.7t	8.7t	8.7t	8.7t	8.7t	8.7t	8.7t	

HLJ	1.0m + 31.0m	28.9 t	8.0m x 6.2m	360 °	JPN

m	12.8	12.8	12.8	25.8	25.8	25.8	25.8	25.8	25.8	30.1	30.1	30.1	30.1	30.1	30.1	34.4	34.4	34.4	34.4	34.4	34.4	34.4	34.4	34.4	m
°	5	20	40	5	20	40	5	20	40	5	20	40	5	20	40	5	20	40	5	20	40	5	20	40	°
3.0																									3.0
3.5																									3.5
4.0																									4.0
4.5																									4.5
5.0																									5.0
6.0																									6.0
7.0																									7.0
8.0																									8.0
9.0																									9.0
10.0	3.5																								10.0
11.0	3.5																								11.0
12.0	3.5			3.3			2.6																		12.0
14.0	3.5			3.3			2.6			3.1			2.9			2.9			2.8			2.3			14.0
16.0	3.5	3.0		3.3			2.6			3.1			2.9			2.9			2.8			2.3			16.0
18.0	3.2	2.7		3.3	3.0		2.6	2.6		3.1	3.0		2.9	2.9		2.9			2.8			2.3			18.0
20.0	2.9	2.5		3.3	2.7		2.6	2.6		3.1	2.8		2.9	2.8		2.9	2.8		2.8	2.8		2.3	2.3		20.0
22.0	2.6	2.2		3.3	2.5		2.6	2.5		3.1	2.6		2.9	2.6		2.9	2.6		2.8	2.6		2.3	2.3		22.0
24.0	2.3	2.0	1.7	3.0	2.3		2.6	2.3		3.1	2.4		2.9	2.4		2.9	2.4		2.8	2.4		2.3	2.3		24.0
26.0	2.1	1.9	1.6	2.7	2.2	1.7	2.6	2.1		2.9	2.2		2.9	2.2		2.9	2.3		2.8	2.3		2.3	2.2		26.0
28.0	1.9	1.7	1.5	2.5	2.0	1.6	2.5	2.0	1.6	2.7	2.1	1.6	2.7	2.1	1.6	2.8	2.2	1.6	2.8	2.2		2.3	2.1		28.0
30.0	1.7	1.6	1.4	2.3	1.9	1.5	2.3	1.9	1.5	2.5	2.0	1.5	2.5	2.0	1.5	2.6	2.0	1.6	2.6	2.0	1.6	2.3	2.0	1.5	30.0
32.0	1.6	1.5	1.3	2.2	1.8	1.4	2.1	1.8	1.4	2.3	1.9	1.5	2.3	1.9	1.5	2.4	1.9	1.5	2.4	1.9	1.5	2.3	1.9	1.5	32.0
34.0	1.5	1.4	1.2	2.0	1.7	1.4	2.0	1.7	1.4	2.1	1.7	1.4	2.2	1.8	1.4	2.3	1.8	1.4	2.3	1.8	1.4	2.2	1.8	1.4	34.0
36.0	1.4	1.3	1.2	1.9	1.6	1.3	1.8	1.6	1.3	2.0	1.7	1.3	2.0	1.7	1.3	2.1	1.7	1.4	2.1	1.7	1.4	2.1	1.7	1.4	36.0
38.0	1.3	1.2		1.7	1.5	1.3	1.7	1.5	1.3	1.9	1.6	1.3	1.9	1.6	1.3	2.0	1.6	1.3	2.0	1.6	1.3	2.0	1.6	1.3	38.0
40.0	1.2			1.6	1.4	1.2	1.6	1.4	1.2	1.8	1.5	1.2	1.8	1.5	1.2	1.9	1.6	1.3	1.9	1.6	1.3	1.9	1.5	1.3	40.0
44.0				1.4	1.3		1.4	1.3		1.6	1.3	1.2	1.6	1.3	1.2	1.7	1.4	1.2	1.7	1.4	1.2	1.6	1.4	1.2	44.0
48.0				1.3	1.2		1.3	1.2		1.4	1.2		1.4	1.2		1.5	1.3	1.1	1.5	1.3	1.1	1.5	1.3	1.1	48.0
52.0				1.2			1.1			1.2	1.1		1.3	1.1		1.2	1.2		1.3	1.2		1.3	1.2		52.0
56.0													1.1						1.2	1.1		1.2	1.1		56.0
60.0																						1.1			60.0
64.0																									64.0
68.0																									68.0
72.0																									72.0
1	0	0	0	46	46	46	0	0	0	92	92	92	46	46	46	92	92	92	46	46	46	0	0	0	1
2	0	0	0	46	46	46	0	0	0	46	46	46	46	46	46	46	46	46	46	46	46	0	0	0	2
3	0	0	0	46	46	46	0	0	0	46	46	46	46	46	46	46	46	46	46	46	46	46	46	46	3
4	0	0	0	0	0	0	46	46	46	0	0	0	46	46	46	46	46	46	46	46	46	92	92	92	4
5	0	0	0	0	0	0	92	92	92	0	0	0	0	0	0	0	0	0	46	46	46	92	92	92	5
ID	1	1	1	66	66	66	17	17	17	67	67	67	54	54	54	55	55	55	49	49	49	19	19	19	ID
[DEG]	0~81	40~85	56~85	25~81	41~85	63~85	26~81	42~85	64~85	35~81	40~85	60~85	26~81	40~85	60~85	41~81	47~85	58~85	35~81	40~85	58~85	27~81	41~85	59~85	[DEG]
	1	1	1	1	1	1	1	1	1	1	1	1	1	1	1	1	1	1	1	1	1	1	1	1	
	8.7t	8.7t	8.7t	8.7t	8.7t	8.7t	8.7t	8.7t	8.7t	8.7t	8.7t	8.7t	8.7t	8.7t	8.7t	8.7t	8.7t	8.7t	8.7t	8.7t	8.7t	8.7t	8.7t	8.7t	

m	43.0	43.0	43.0	43.0	43.0	43.0	47.4	47.4	47.4	47.4	47.4	47.4	51.7	51.7	51.7	51.7	51.7	51.7	56.0	56.0	56.0	60.0	60.0	60.0	m
°	5	20	40	5	20	40	5	20	40	5	20	40	5	20	40	5	20	40	5	20	40	5	20	40	°
3.0																									3.0
3.5																									3.5
4.0																									4.0
4.5																									4.5
5.0																									5.0
6.0																									6.0
7.0																									7.0
8.0																									8.0
9.0																									9.0
10.0																									10.0
11.0																									11.0
12.0																									12.0
14.0																									14.0
16.0	2.7			2.1																					16.0
18.0	2.7			2.1			2.4			2.2			2.2			2.1									18.0
20.0	2.7			2.1			2.4			2.2			2.2			2.1									20.0
22.0	2.7	2.6		2.1	2.1		2.4	2.4		2.2	2.2		2.2			2.1			2.1			1.6			22.0
24.0	2.7	2.5		2.1	2.1		2.4	2.4		2.2	2.2		2.2	2.2		2.1	2.1		2.1	2.1		1.6			24.0
26.0	2.7	2.3		2.1	2.1		2.4	2.3		2.2	2.2		2.2	2.2		2.1	2.1		2.1	2.1		1.6	1.6		26.0
28.0	2.7	2.2		2.1	2.1		2.4	2.2		2.2	2.2		2.2	2.2		2.1	2.1		2.1	2.1		1.6	1.6		28.0
30.0	2.7	2.1	1.6	2.1	2.1		2.4	2.1		2.2	2.1		2.2	2.1		2.1	2.1		2.1	2.1		1.6	1.6		30.0
32.0	2.6	2.0	1.5	2.1	2.0	1.5	2.4	2.0	1.5	2.2	2.0	1.5	2.2	2.0		2.1	2.0		2.1	2.0		1.6	1.6		32.0
34.0	2.5	1.9	1.4	2.1	1.9	1.4	2.4	1.9	1.5	2.2	1.9	1.4	2.2	1.9	1.4	2.1	1.9	1.4	2.1	1.9	1.4	1.6	1.6		34.0
36.0	2.3	1.8	1.4	2.1	1.8	1.4	2.4	1.8	1.4	2.2	1.8	1.4	2.2	1.9	1.4	2.1	1.8	1.4	2.1	1.9	1.4	1.6	1.6	1.2	36.0
38.0	2.2	1.7	1.3	2.1	1.7	1.3	2.3	1.8	1.4	2.2	1.8	1.4	2.2	1.8	1.4	2.1	1.8	1.4	2.1	1.8	1.4	1.6	1.6	1.2	38.0
40.0	2.1	1.7	1.3	2.0	1.6	1.3	2.2	1.7	1.3	2.2	1.7	1.3	2.2	1.7	1.3	2.1	1.7	1.3	2.1	1.7	1.3	1.6	1.6	1.2	40.0
44.0	1.9	1.5	1.2	1.8	1.5	1.2	1.9	1.5	1.2	1.9	1.5	1.2	2.0	1.6	1.2	2.0	1.6	1.2	2.0	1.6	1.2	1.6	1.5	1.1	44.0
48.0	1.6	1.4	1.2	1.6	1.4	1.2	1.5	1.4	1.2	1.7	1.4	1.2	1.5	1.5	1.2	1.8	1.5	1.2	1.6	1.5	1.2	1.4	1.4	1.1	48.0
52.0		1.3	1.1	1.5	1.3	1.1		1.3	1.1	1.3	1.3	1.1		1.4	1.1	1.4	1.4	1.1		1.4	1.1		1.3	1.0	52.0
56.0				1.3	1.2						1.2				1.1		1.3	1.1			1.1			1.0	56.0
60.0					1.1																				60.0
64.0																									64.0
68.0																									68.0
72.0																									72.0
1	92	92	92	0	0	0	92	92	92	46	46	46	92	92	92	46	46	46	92	92	92	100	100	100	1
2	92	92	92	46	46	46	92	92	92	92	92	92	92	92	92	92	92	92	92	92	92	100	100	100	2
3	46	46	46	92	92	92	92	92	92	92	92	92	92	92	92	92	92	92	92	92	92	100	100	100	3
4	46	46	46	92	92	92	46	46	46	92	92	92	92	92	92	92	92	92	92	92	92	100	100	100	4
5	46	46	46	92	92	92	46	46	46	46	46	46	46	46	46	92	92	92	92	92	92	100	100	100	5
ID	42	42	42	21	21	21	38	38	38	31	31	31	32	32	32	23	23	23	24	24	24	16	16	16	ID
[DEG]	55~81	56~85	60~85	47~81	47~85	61~85	58~81	59~85	64~85	55~81	55~85	64~85	61~81	63~85	63~85	58~81	59~85	63~85	64~81	65~85	66~85	66~81	67~85	68~85	[DEG]
	1	1	1	1	1	1	1	1	1	1	1	1	1	1	1	1	1	1	1	1	1	1	1	1	
	8.7t	8.7t	8.7t	8.7t	8.7t	8.7t	8.7t	8.7t	8.7t	8.7t	8.7t	8.7t	8.7t	8.7t	8.7t	8.7t	8.7t	8.7t	8.7t	8.7t	8.7t	8.7t	8.7t	8.7t	

油圧チルトジブ

HLJ	1.0m + 2.8m	28.9 t	8.0m x 5.0m	360 °	JPN

m	12.8	12.8	12.8	25.8	25.8	25.8	25.8	25.8	25.8	30.1	30.1	30.1	30.1	30.1	30.1	34.4	34.4	34.4	34.4	34.4	34.4	34.4	34.4	34.4	m
°	5	20	40	5	20	40	5	20	40	5	20	40	5	20	40	5	20	40	5	20	40	5	20	40	°
3.0		31.6	25.3																						3.0
3.5	38.1	30.3	24.6		31.4			25.0																	3.5
4.0	36.1	29.1	23.9		30.6	23.4		24.2						31.2											4.0
4.5	34.3	28.0	23.3		29.8	23.1		23.3	21.5		30.2			30.4											4.5
5.0	32.7	27.0	22.8		29.0	22.7		22.4	20.6		29.5	22.8		29.8	22.9		29.9			24.9			16.9		5.0
6.0	29.9	25.3	21.8		27.7	22.0		20.5	19.0		28.3	22.2		28.5	22.3		28.9	22.5		24.9	23.0		16.9	16.9	6.0
7.0	27.7	23.8	20.9		26.5	21.3		18.9	17.7		27.1	21.6		27.4	21.7		27.9	22.0		24.9	22.4		16.9	16.9	7.0
8.0	25.7	22.6	20.2	32.0	25.4	20.8	18.6	17.5	16.5		26.1	21.1		26.3	21.2		26.9	21.5		24.3	21.9		16.9	16.7	8.0
9.0	24.1	21.5		30.3	24.4	20.2	17.3	16.3	15.5	30.1	25.2	20.6	31.2	25.4	20.7		26.0	21.0		23.1	20.9		16.2	15.9	9.0
10.0	22.7	20.6		25.8	23.5	19.7	16.1	15.3	14.6	25.2	24.3	20.2	26.3	24.5	20.2		25.2	20.6	24.4	22.1	20.1		15.3	14.9	10.0
11.0	21.5	19.9		22.0	22.4	19.3	15.1	14.4	13.7	21.4	21.8	19.8	22.5	22.8	19.8	21.9	22.3	20.2	23.2	21.1	19.3	14.8	14.4	14.0	11.0
12.0	19.7	19.3		19.0	19.3	18.9	14.2	13.6	13.0	18.4	18.8	19.2	19.5	19.8	19.4	18.9	19.3	19.7	20.2	20.2	18.6	13.9	13.5	13.2	12.0
14.0				14.6	14.8	15.1	12.6	12.2	11.8	14.1	14.4	14.6	15.0	15.3	15.5	14.5	14.8	15.1	15.7	15.9	16.2	12.3	12.1	11.8	14.0
16.0				11.5	11.7	11.8	11.4	11.1	10.8	11.0	11.2	11.4	11.9	12.1	12.3	11.4	11.7	11.9	12.5	12.7	12.9	11.1	10.9	10.6	16.0
18.0				9.2	9.3		10.3	10.0		8.7	8.9	9.0	9.6	9.8	9.9	9.1	9.3	9.5	10.2	10.4	10.5	9.9	9.8	9.7	18.0
20.0				7.4	7.5		9.3	9.2		6.9	7.1		7.8	7.9		7.3	7.5	7.6	8.4	8.6	8.7	8.9	8.8	8.8	20.0
22.0				6.0	6.1		8.1	8.1		5.5	5.6		6.4	6.5		5.9	6.1		7.0	7.1		8.1	8.0		22.0
24.0				4.9			6.9			4.4	4.5		5.3	5.3		4.8	4.9		5.8	5.9		7.1	7.2		24.0
26.0										3.4	3.5		4.3	4.4		3.8	3.9		4.9	4.9		6.1	6.2		26.0
28.0										2.7			3.5			3.1	3.1		4.0	4.1		5.3	5.4		28.0
30.0																2.4			3.4			4.6			30.0
32.0																1.8			2.8			4.0			32.0
34.0																									34.0
36.0																									36.0
38.0																									38.0
40.0																									40.0
44.0																									44.0
48.0																									48.0
52.0																									52.0
56.0																									56.0
60.0																									60.0
64.0																									64.0
68.0																									68.0
72.0																									72.0
1	0	0	0	46	46	46	0	0	0	92	92	92	46	46	46	92	92	92	46	46	46	0	0	0	1
2	0	0	0	46	46	46	0	0	0	46	46	46	46	46	46	46	46	46	46	46	46	0	0	0	2
3	0	0	0	46	46	46	0	0	0	46	46	46	46	46	46	46	46	46	46	46	46	46	46	46	3
4	0	0	0	0	0	0	46	46	46	0	0	0	46	46	46	46	46	46	46	46	46	92	92	92	4
5	0	0	0	0	0	0	92	92	92	0	0	0	0	0	0	0	0	0	46	46	46	92	92	92	5
ID	1	1	1	66	66	66	17	17	17	67	67	67	54	54	54	55	55	55	49	49	49	19	19	19	ID
[DEG]	0~76	34~85	58~85	28~76	37~85	56~85	29~76	38~85	57~85	28~76	36~85	58~85	28~76	36~85	57~85	28~76	40~85	58~85	28~76	41~85	59~85	28~76	41~85	59~85	[DEG]
	5	5	5	4	4	4	3	3	3	4	4	4	4	4	4	4	4	4	3	3	3	2	2	2	
	60t	60t	60t	60t	60t	60t	26t	26t	26t	60t	60t	60t	60t	60t	60t	60t	60t	60t	26t	26t	26t	26t	26t	26t	

m	43.0	43.0	43.0	43.0	43.0	43.0	47.4	47.4	47.4	47.4	47.4	47.4	51.7	51.7	51.7	51.7	51.7	51.7	56.0	56.0	56.0	60.0	60.0	60.0	m
°	5	20	40	5	20	40	5	20	40	5	20	40	5	20	40	5	20	40	5	20	40	5	20	40	°
3.0																									3.0
3.5																									3.5
4.0																									4.0
4.5																									4.5
5.0																									5.0
6.0																									6.0
7.0		17.1	17.1		12.1	12.1		13.9			12.4														7.0
8.0		17.1	17.1		12.1	12.1		13.9	13.9		12.4	12.4		11.1			9.8								8.0
9.0		17.1	17.1		12.1	12.1		13.9	13.9		12.4	12.4		11.1	11.1		9.8	9.8		9.0	9.0		7.8		9.0
10.0		17.1	17.1		12.1	12.1		13.9	13.9		12.4	12.4		11.1	11.1		9.8	9.8		9.0	9.0		7.8	7.8	10.0
11.0		17.1	17.1		12.1	12.1		13.9	13.9		12.4	12.4		11.1	11.1		9.8	9.8		9.0	9.0		7.8	7.8	11.0
12.0		17.1	17.1		12.1	12.1		13.9	13.9		12.4	12.4		11.1	11.1		9.8	9.8		9.0	9.0		7.8	7.8	12.0
14.0	15.1	15.4	15.7	12.1	12.1	12.1		13.9	13.9		12.4	12.4		11.1	11.1		9.8	9.8		9.0	9.0		7.8	7.8	14.0
16.0	12.0	12.3	12.5	11.5	11.4	11.2	12.1	12.4	12.6	12.4	12.4	12.4	11.1	11.1	11.1	9.8	9.8	9.8		9.0	9.0		7.8	7.8	16.0
18.0	9.7	9.9	10.1	10.4	10.3	10.2	9.8	10.0	10.2	10.4	10.6	10.8	10.0	10.2	10.4	9.8	9.8	9.8	9.0	9.0	9.0		7.8	7.8	18.0
20.0	7.9	8.1	8.2	9.5	9.4	9.3	8.0	8.2	8.4	8.6	8.8	8.9	8.2	8.4	8.6	8.9	9.1	9.2	8.5	8.7	8.8	7.8	7.8	7.8	20.0
22.0	6.5	6.6	6.8	8.0	8.1	8.2	6.6	6.7	6.9	7.2	7.3	7.5	6.8	6.9	7.1	7.5	7.6	7.7	7.1	7.2	7.4	7.1	7.2	7.4	22.0
24.0	5.3	5.4	5.6	6.8	6.9	7.0	5.4	5.6	5.7	6.0	6.1	6.3	5.6	5.8	5.9	6.3	6.4	6.5	5.9	6.0	6.2	5.9	6.0	6.2	24.0
26.0	4.4	4.5	4.6	5.9	5.9	6.0	4.5	4.6	4.7	5.1	5.2	5.3	4.7	4.8	4.9	5.3	5.4	5.5	4.9	5.1	5.2	4.9	5.0	5.2	26.0
28.0	3.6	3.6		5.0	5.1		3.7	3.8	3.8	4.2	4.3	4.4	3.9	4.0	4.0	4.5	4.6	4.7	4.1	4.2	4.3	4.1	4.2	4.3	28.0
30.0	2.9	2.9		4.3	4.4		3.0	3.0		3.5	3.6		3.2	3.3	3.3	3.8	3.9	4.0	3.4	3.5	3.6	3.4	3.5	3.6	30.0
32.0	2.3	2.3		3.7	3.8		2.4	2.4		2.9	3.0		2.6	2.6		3.2	3.3		2.8	2.9	3.0	2.8	2.9	3.0	32.0
34.0	1.7	1.8		3.2	3.2		1.8	1.9		2.4	2.5		2.0	2.1		2.7	2.7		2.3	2.4		2.3	2.4	2.4	34.0
36.0	1.2	1.3		2.7	2.8		1.3	1.4		2.0	2.0		1.5	1.6		2.2	2.3		1.8	1.9		1.8	1.9		36.0
38.0				2.3						1.5	1.6					1.8	1.9		1.4	1.5		1.4	1.5		38.0
40.0				2.0							1.2					1.4	1.5								40.0
44.0																									44.0
48.0																									48.0
52.0																									52.0
56.0																									56.0
60.0																									60.0
64.0																									64.0
68.0																									68.0
72.0																									72.0
1	92	92	92	0	0	0	92	92	92	46	46	46	92	92	92	46	46	46	92	92	92	100	100	100	1
2	92	92	92	46	46	46	92	92	92	92	92	92	92	92	92	92	92	92	92	92	92	100	100	100	2
3	46	46	46	92	92	92	92	92	92	92	92	92	92	92	92	92	92	92	92	92	92	100	100	100	3
4	46	46	46	92	92	92	46	46	46	92	92	92	92	92	92	92	92	92	92	92	92	100	100	100	4
5	46	46	46	92	92	92	46	46	46	46	46	46	46	46	46	92	92	92	92	92	92	100	100	100	5
ID	42	42	42	21	21	21	38	38	38	31	31	31	32	32	32	23	23	23	24	24	24	16	16	16	ID
[DEG]	38~76	38~85	57~85	28~76	39~85	58~85	44~76	45~85	58~85	41~76	37~85	58~85	50~76	50~85	59~85	43~76	44~85	59~85	51~76	52~85	60~85	55~76	56~85	61~85	[DEG]
	2	2	2	2	2	2	2	2	2	2	2	2	2	2	2	2	2	2	2	2	2	2	2	2	
	26t	26t	26t	26t	26t	26t	26t	26t	26t	26t	26t	26t	26t	26t	26t	26t	26t	26t	26t	26t	26t	26t	26t	26t	

HLJ	1.0m + 9.2m	28.9 t	8.0m x 5.0m	360 °	JPN

m	12.8	12.8	12.8	25.8	25.8	25.8	25.8	25.8	25.8	30.1	30.1	30.1	30.1	30.1	30.1	34.4	34.4	34.4	34.4	34.4	34.4	34.4	34.4	34.4	m
°	5	20	40	5	20	40	5	20	40	5	20	40	5	20	40	5	20	40	5	20	40	5	20	40	°
3.0																									3.0
3.5																									3.5
4.0	15.0																								4.0
4.5	15.0																								4.5
5.0	15.0	13.5																							5.0
6.0	15.0	12.4			14.4			14.1																	6.0
7.0	14.8	11.4	8.9	15.0	13.5		14.3	13.3			13.6			13.8			13.8			13.4					7.0
8.0	13.4	10.6	8.4	15.0	12.8		14.3	12.5		15.0	12.9		15.0	13.1			13.2			13.3			10.1		8.0
9.0	12.2	9.9	8.0	15.0	12.1	8.7	14.0	11.9	8.6	15.0	12.3	8.8	15.0	12.5	8.8	15.0	12.6		13.4	12.7			10.1		9.0
10.0	11.2	9.2	7.6	15.0	11.5	8.4	13.2	11.3	8.4	15.0	11.8	8.5	15.0	11.9	8.6	15.0	12.1	8.6	13.4	12.2	8.6	10.1	10.1		10.0
11.0	10.4	8.7	7.3	15.0	10.9	8.2	12.5	10.8	8.1	15.0	11.3	8.3	15.0	11.4	8.3	15.0	11.6	8.4	13.4	11.7	8.4	10.1	10.1	8.3	11.0
12.0	9.6	8.2	7.0	14.2	10.4	7.9	11.7	10.3	7.9	15.0	10.8	8.1	15.0	10.9	8.1	15.0	11.1	8.2	13.4	11.2	8.2	10.1	10.1	8.1	12.0
14.0	8.4	7.4	6.5	12.6	9.6	7.5	10.3	9.4	7.4	13.5	10.0	7.7	13.7	10.1	7.7	14.4	10.3	7.8	13.4	10.4	7.8	10.1	9.9	7.8	14.0
16.0	7.5	6.8		11.3	8.9	7.1	9.1	8.4	7.1	11.9	9.3	7.3	12.3	9.3	7.3	12.2	9.7	7.5	13.1	9.7	7.5	9.7	9.2	7.4	16.0
18.0	6.8			10.2	8.3	6.8	8.1	7.6	6.8	9.6	8.7	7.0	10.4	8.7	7.0	9.8	9.1	7.2	10.7	9.1	7.2	8.7	8.4	7.1	18.0
20.0				8.4	7.7	6.5	7.3	6.9	6.5	7.8	8.2	6.7	8.6	8.2	6.8	8.1	8.6	6.9	8.9	8.6	6.9	7.8	7.6	6.9	20.0
22.0				7.0	7.3	6.3	6.7	6.3	6.1	6.4	6.9	6.5	7.2	7.7	6.5	6.7	7.2	6.7	7.5	8.0	6.7	7.1	6.9	6.7	22.0
24.0				5.9	6.2		6.1	5.8		5.3	5.7	6.2	6.1	6.4	6.3	5.5	6.0	6.4	6.3	6.7	6.5	6.4	6.3	6.2	24.0
26.0				4.9	5.2		5.6	5.4		4.3	4.7		5.1	5.4		4.6	4.9	5.3	5.4	5.7	6.1	5.9	5.8	5.7	26.0
28.0				4.1	4.3		5.2	5.0		3.5	3.8		4.3	4.6		3.8	4.1		4.6	4.9		5.4	5.3		28.0
30.0				3.4			4.8			2.8	3.1		3.6	3.8		3.1	3.4		3.9	4.1		4.9	4.9		30.0
32.0										2.2	2.5		3.0	3.2		2.5	2.7		3.3	3.5		4.3	4.5		32.0
34.0										1.6			2.5			1.9	2.2		2.8	2.9		3.8	3.9		34.0
36.0																1.4			2.3			3.3			36.0
38.0																			1.9			2.9			38.0
40.0																									40.0
44.0																									44.0
48.0																									48.0
52.0																									52.0
56.0																									56.0
60.0																									60.0
64.0																									64.0
68.0																									68.0
72.0																									72.0
1	0	0	0	46	46	46	0	0	0	92	92	92	46	46	46	92	92	92	46	46	46	0	0	0	1
2	0	0	0	46	46	46	0	0	0	46	46	46	46	46	46	46	46	46	46	46	46	0	0	0	2
3	0	0	0	46	46	46	0	0	0	46	46	46	46	46	46	46	46	46	46	46	46	46	46	46	3
4	0	0	0	0	0	0	46	46	46	0	0	0	46	46	46	46	46	46	46	46	46	92	92	92	4
5	0	0	0	0	0	0	92	92	92	0	0	0	0	0	0	0	0	0	46	46	46	92	92	92	5
ID	1	1	1	66	66	66	17	17	17	67	67	67	54	54	54	55	55	55	49	49	49	19	19	19	ID
[DEG]	0~79	44~85	57~85	27~79	37~85	56~85	28~79	38~85	57~85	27~79	36~85	57~85	27~79	36~85	57~85	32~79	40~85	58~85	27~79	40~85	59~85	28~79	41~85	59~85	[DEG]
	2	2	2	2	2	2	2	2	2	2	2	2	2	2	2	2	2	2	2	2	2	2	2	2	
	26t	26t	26t	26t	26t	26t	26t	26t	26t	26t	26t	26t	26t	26t	26t	26t	26t	26t	26t	26t	26t	26t	26t	26t	

m	43.0	43.0	43.0	43.0	43.0	43.0	47.4	47.4	47.4	47.4	47.4	47.4	51.7	51.7	51.7	51.7	51.7	51.7	56.0	56.0	56.0	60.0	60.0	60.0	m
°	5	20	40	5	20	40	5	20	40	5	20	40	5	20	40	5	20	40	5	20	40	5	20	40	°
3.0																									3.0
3.5																									3.5
4.0																									4.0
4.5																									4.5
5.0																									5.0
6.0																									6.0
7.0																									7.0
8.0																									8.0
9.0		10.6			7.2																				9.0
10.0		10.6			7.2			8.4			7.5														10.0
11.0		10.6			7.2			8.4			7.5			7.0			6.4			6.4					11.0
12.0	10.6	10.6	8.3	7.2	7.2	7.2		8.4			7.5			7.0			6.4			6.4			5.7		12.0
14.0	10.6	10.6	7.9	7.2	7.2	7.2	8.4	8.4	8.0	7.5	7.5	7.5		7.0	7.0	6.4	6.4	6.4		6.4			5.7		14.0
16.0	10.6	10.2	7.6	7.2	7.2	7.2	8.4	8.4	7.7	7.5	7.5	7.5	7.0	7.0	7.0	6.4	6.4	6.4	6.4	6.4	6.4		5.7	5.7	16.0
18.0	10.0	9.6	7.4	7.2	7.2	7.2	8.4	8.4	7.4	7.5	7.5	7.5	7.0	7.0	7.0	6.4	6.4	6.4	6.4	6.4	6.4	5.7	5.7	5.7	18.0
20.0	8.2	8.8	7.1	7.2	7.2	7.1	8.4	8.4	7.2	7.5	7.5	7.2	7.0	7.0	7.0	6.4	6.4	6.4	6.4	6.4	6.4	5.7	5.7	5.7	20.0
22.0	6.8	7.4	6.9	7.2	7.2	6.9	7.0	7.6	7.0	7.5	7.5	7.0	7.0	7.0	7.0	6.4	6.4	6.4	6.4	6.4	6.4	5.7	5.7	5.7	22.0
24.0	5.7	6.1	6.6	7.2	7.0	6.7	5.9	6.3	6.8	6.4	6.8	6.8	6.0	6.5	6.9	6.4	6.4	6.4	6.2	6.4	6.4	5.7	5.7	5.5	24.0
26.0	4.7	5.1	5.6	6.2	6.5	6.4	4.9	5.3	5.8	5.4	5.8	6.2	5.0	5.5	5.9	5.6	6.0	6.4	5.2	5.6	6.1	5.2	5.4	5.2	26.0
28.0	3.9	4.3	4.7	5.4	5.6	5.9	4.1	4.5	4.9	4.6	5.0	5.3	4.2	4.6	5.0	4.8	5.1	5.5	4.4	4.8	5.2	4.4	4.8	4.9	28.0
30.0	3.2	3.6	3.9	4.7	4.9	5.2	3.4	3.7	4.1	3.9	4.2	4.5	3.5	3.9	4.2	4.1	4.4	4.7	3.7	4.1	4.4	3.7	4.0	4.4	30.0
32.0	2.6	2.9	3.2	4.0	4.3	4.5	2.8	3.1	3.4	3.3	3.6	3.9	2.9	3.2	3.6	3.5	3.8	4.1	3.1	3.4	3.8	3.1	3.4	3.7	32.0
34.0	2.1	2.4		3.5	3.7		2.3	2.5	2.8	2.8	3.0	3.3	2.4	2.7	3.0	3.0	3.2	3.5	2.6	2.9	3.2	2.5	2.8	3.1	34.0
36.0	1.5	1.8		3.0	3.2		1.7	2.0		2.3	2.5		1.9	2.2	2.4	2.5	2.7	3.0	2.1	2.4	2.6	2.1	2.4	2.6	36.0
38.0	1.1	1.3		2.6	2.8		1.2	1.5		1.9	2.1		1.4	1.7		2.1	2.3		1.6	1.9	2.2	1.6	1.9	2.2	38.0
40.0				2.3	2.4					1.4	1.7			1.2		1.7	1.9		1.2	1.5			1.4	1.7	40.0
44.0				1.6													1.1								44.0
48.0																									48.0
52.0																									52.0
56.0																									56.0
60.0																									60.0
64.0																									64.0
68.0																									68.0
72.0																									72.0
1	92	92	92	0	0	0	92	92	92	46	46	46	92	92	92	46	46	46	92	92	92	100	100	100	1
2	92	92	92	46	46	46	92	92	92	92	92	92	92	92	92	92	92	92	92	92	92	100	100	100	2
3	46	46	46	92	92	92	92	92	92	92	92	92	92	92	92	92	92	92	92	92	92	100	100	100	3
4	46	46	46	92	92	92	46	46	46	92	92	92	92	92	92	92	92	92	92	92	92	100	100	100	4
5	46	46	46	92	92	92	46	46	46	46	46	46	46	46	46	92	92	92	92	92	92	100	100	100	5
ID	42	42	42	21	21	21	38	38	38	31	31	31	32	32	32	23	23	23	24	24	24	16	16	16	ID
[DEG]	43~79	45~85	57~85	32~79	43~85	58~85	48~79	51~85	58~85	46~79	48~85	58~85	53~79	52~85	59~85	50~79	47~85	59~85	54~79	56~85	60~85	59~79	59~85	61~85	[DEG]
	2	2	2	1	1	1	1	1	1	1	1	1	1	1	1	1	1	1	1	1	1	1	1	1	
	26t	26t	26t	8.7t	8.7t	8.7t	8.7t	8.7t	8.7t	8.7t	8.7t	8.7t	8.7t	8.7t	8.7t	8.7t	8.7t	8.7t	8.7t	8.7t	8.7t	8.7t	8.7t	8.7t	

油圧チルトジブ

HLJ	1.0m + 17.0m	28.9 t	8.0m x 5.0m	360 °	JPN

m	12.8	12.8	12.8	25.8	25.8	25.8	25.8	25.8	25.8	30.1	30.1	30.1	30.1	30.1	30.1	34.4	34.4	34.4	34.4	34.4	34.4	34.4	34.4	34.4	m
°	5	20	40	5	20	40	5	20	40	5	20	40	5	20	40	5	20	40	5	20	40	5	20	40	°
3.0																									3.0
3.5																									3.5
4.0																									4.0
4.5																									4.5
5.0																									5.0
6.0	7.3																								6.0
7.0	6.8																								7.0
8.0	6.4	5.4		7.0			5.6																		8.0
9.0	6.0	5.1		6.7			5.6			6.7			6.5												9.0
10.0	5.7	4.8		6.4	5.0		5.6	4.8		6.5			6.3			6.3			5.9			4.6			10.0
11.0	5.3	4.6		6.1	4.8		5.6	4.6		6.2	4.9		6.1	4.8		6.1	4.8		5.9	4.7		4.6			11.0
12.0	5.1	4.4		5.8	4.7		5.5	4.5		6.0	4.7		5.9	4.6		5.9	4.7		5.7	4.6		4.6	4.4		12.0
14.0	4.6	4.0	3.5	5.4	4.4		5.1	4.2		5.5	4.4		5.4	4.4		5.5	4.4		5.4	4.3		4.6	4.2		14.0
16.0	4.2	3.7	3.3	5.0	4.1	3.4	4.8	3.9	3.3	5.1	4.2	3.4	5.1	4.1	3.4	5.2	4.2	3.4	5.1	4.1		4.6	4.0		16.0
18.0	3.8	3.4	3.1	4.6	3.9	3.3	4.4	3.7	3.2	4.8	3.9	3.3	4.8	3.9	3.3	4.9	3.9	3.3	4.8	3.9	3.2	4.6	3.8	3.2	18.0
20.0	3.5	3.2	3.0	4.3	3.7	3.1	4.2	3.5	3.1	4.5	3.7	3.2	4.5	3.7	3.2	4.6	3.8	3.2	4.5	3.7	3.1	4.3	3.6	3.1	20.0
22.0	3.3	3.1	2.9	4.1	3.5	3.0	3.9	3.4	3.0	4.3	3.6	3.1	4.2	3.5	3.0	4.3	3.6	3.1	4.3	3.5	3.0	4.1	3.5	3.0	22.0
24.0	3.1	2.9		3.8	3.3	2.9	3.7	3.2	2.9	4.0	3.4	3.0	4.0	3.4	2.9	4.1	3.5	3.0	4.0	3.4	2.9	3.9	3.3	2.9	24.0
26.0	3.0			3.6	3.2	2.9	3.5	3.1	2.8	3.8	3.3	2.9	3.8	3.2	2.9	3.9	3.3	2.9	3.8	3.3	2.9	3.7	3.2	2.8	26.0
28.0				3.5	3.1	2.8	3.4	3.0	2.7	3.6	3.2	2.8	3.6	3.1	2.8	3.7	3.2	2.8	3.7	3.2	2.8	3.6	3.1	2.7	28.0
30.0				3.3	3.0		3.2	2.9		3.5	3.0	2.8	3.4	3.0	2.7	3.6	3.1	2.8	3.5	3.1	2.7	3.4	3.0	2.7	30.0
32.0				3.2	2.9		3.1	2.8		3.2	2.9	2.7	3.3	2.9	2.7	3.3	3.0	2.7	3.4	3.0	2.7	3.3	2.9	2.6	32.0
34.0				3.0	2.8		3.0	2.7		2.7	2.9		3.2	2.8		2.8	2.9	2.7	3.3	2.9	2.6	3.2	2.8	2.6	34.0
36.0				2.7	2.7		2.9	2.7		2.2	2.5		2.8	2.8		2.3	2.7		2.9	2.8		3.1	2.7		36.0
38.0				2.3			2.8			1.8	2.1		2.4	2.6		1.9	2.2		2.5	2.7		3.0	2.7		38.0
40.0										1.4			2.0			1.5	1.8		2.1	2.4		2.9	2.6		40.0
44.0																			1.5			2.3			44.0
48.0																									48.0
52.0																									52.0
56.0																									56.0
60.0																									60.0
64.0																									64.0
68.0																									68.0
72.0																									72.0
1	0	0	0	46	46	46	0	0	0	92	92	92	46	46	46	92	92	92	46	46	46	0	0	0	1
2	0	0	0	46	46	46	0	0	0	46	46	46	46	46	46	46	46	46	46	46	46	0	0	0	2
3	0	0	0	46	46	46	0	0	0	46	46	46	46	46	46	46	46	46	46	46	46	46	46	46	3
4	0	0	0	0	0	0	46	46	46	0	0	0	46	46	46	46	46	46	46	46	46	92	92	92	4
5	0	0	0	0	0	0	92	92	92	0	0	0	0	0	0	0	0	0	46	46	46	92	92	92	5
ID	1	1	1	66	66	66	17	17	17	67	67	67	54	54	54	55	55	55	49	49	49	19	19	19	ID
[DEG]	0~81	41~85	56~85	25~81	36~85	59~85	26~81	37~85	60~85	31~81	40~85	57~85	31~81	40~85	57~85	39~81	43~85	58~85	31~81	43~85	58~85	32~81	44~85	58~85	[DEG]
	1	1	1	1	1	1	1	1	1	1	1	1	1	1	1	1	1	1	1	1	1	1	1	1	
	8.7t	8.7t	8.7t	8.7t	8.7t	8.7t	8.7t	8.7t	8.7t	8.7t	8.7t	8.7t	8.7t	8.7t	8.7t	8.7t	8.7t	8.7t	8.7t	8.7t	8.7t	8.7t	8.7t	8.7t	

m	43.0	43.0	43.0	43.0	43.0	43.0	47.4	47.4	47.4	47.4	47.4	47.4	51.7	51.7	51.7	51.7	51.7	51.7	56.0	56.0	56.0	60.0	60.0	60.0	m
°	5	20	40	5	20	40	5	20	40	5	20	40	5	20	40	5	20	40	5	20	40	5	20	40	°
3.0																									3.0
3.5																									3.5
4.0																									4.0
4.5																									4.5
5.0																									5.0
6.0																									6.0
7.0																									7.0
8.0																									8.0
9.0																									9.0
10.0																									10.0
11.0																									11.0
12.0	5.5			4.1																					12.0
14.0	5.4	4.3		4.1	4.1		4.7	4.2		4.3	4.2		4.1			3.9									14.0
16.0	5.1	4.1		4.1	3.9		4.7	4.1		4.3	4.0		4.1	4.0		3.9	3.9		3.9	3.8		3.6	3.6		16.0
18.0	4.8	3.9	3.2	4.1	3.8		4.7	3.9		4.3	3.8		4.1	3.8		3.9	3.7		3.9	3.7		3.6	3.6		18.0
20.0	4.6	3.8	3.1	4.1	3.6	3.1	4.6	3.7	3.1	4.3	3.7	3.1	4.1	3.7	3.1	3.9	3.6	3.0	3.9	3.6		3.6	3.5		20.0
22.0	4.4	3.6	3.0	4.1	3.5	3.0	4.4	3.6	3.0	4.3	3.5	3.0	4.1	3.5	3.0	3.9	3.5	2.9	3.9	3.5	2.9	3.6	3.4	2.9	22.0
24.0	4.2	3.5	3.0	4.0	3.3	2.9	4.2	3.5	2.9	4.1	3.4	2.9	4.1	3.4	2.9	3.9	3.4	2.9	3.9	3.3	2.9	3.6	3.3	2.8	24.0
26.0	4.0	3.3	2.9	3.8	3.2	2.8	4.0	3.3	2.9	3.9	3.3	2.8	4.0	3.3	2.8	3.8	3.2	2.8	3.8	3.2	2.8	3.6	3.2	2.8	26.0
28.0	3.8	3.2	2.8	3.7	3.1	2.7	3.9	3.2	2.8	3.8	3.2	2.8	3.8	3.2	2.8	3.7	3.1	2.7	3.7	3.1	2.7	3.6	3.1	2.7	28.0
30.0	3.7	3.1	2.8	3.5	3.0	2.7	3.7	3.1	2.7	3.6	3.1	2.7	3.7	3.1	2.7	3.6	3.1	2.7	3.6	3.1	2.7	3.5	3.0	2.6	30.0
32.0	3.3	3.0	2.7	3.4	2.9	2.6	3.3	3.0	2.7	3.5	3.0	2.7	3.3	3.0	2.7	3.5	3.0	2.6	3.5	3.0	2.6	3.4	2.9	2.6	32.0
34.0	2.8	2.9	2.6	3.3	2.9	2.6	2.7	3.0	2.6	3.2	2.9	2.6	2.8	2.9	2.6	3.3	2.9	2.6	2.9	2.9	2.6	2.9	2.9	2.5	34.0
36.0	2.3	2.7	2.6	3.2	2.8	2.5	2.3	2.7	2.6	2.7	2.8	2.6	2.3	2.8	2.6	2.8	2.8	2.5	2.5	2.8	2.5	2.4	2.8	2.5	36.0
38.0	1.9	2.3	2.6	3.0	2.7	2.5	1.8	2.3	2.5	2.3	2.7	2.5	1.9	2.3	2.5	2.4	2.7	2.5	2.0	2.5	2.5	2.0	2.4	2.5	38.0
40.0	1.5	1.9		2.6	2.6		1.5	1.9	2.3	1.9	2.3	2.5	1.5	1.9	2.4	2.0	2.4	2.4	1.7	2.1	2.4	1.6	2.0	2.4	40.0
44.0				1.9	2.2					1.2	1.6			1.2	1.6	1.4	1.7	2.0		1.4	1.7		1.3	1.7	44.0
48.0				1.4	1.6																				48.0
52.0																									52.0
56.0																									56.0
60.0																									60.0
64.0																									64.0
68.0																									68.0
72.0																									72.0
1	92	92	92	0	0	0	92	92	92	46	46	46	92	92	92	46	46	46	92	92	92	100	100	100	1
2	92	92	92	46	46	46	92	92	92	92	92	92	92	92	92	92	92	92	92	92	92	100	100	100	2
3	46	46	46	92	92	92	92	92	92	92	92	92	92	92	92	92	92	92	92	92	92	100	100	100	3
4	46	46	46	92	92	92	46	46	46	92	92	92	92	92	92	92	92	92	92	92	92	100	100	100	4
5	46	46	46	92	92	92	46	46	46	46	46	46	46	46	46	92	92	92	92	92	92	100	100	100	5
ID	42	42	42	21	21	21	38	38	38	31	31	31	32	32	32	23	23	23	24	24	24	16	16	16	ID
[DEG]	50~81	54~85	60~85	39~81	42~85	60~85	54~81	57~85	61~85	49~81	52~85	61~85	57~81	56~85	59~85	53~81	56~85	59~85	60~81	59~85	62~85	62~81	62~85	65~85	[DEG]
	1	1	1	1	1	1	1	1	1	1	1	1	1	1	1	1	1	1	1	1	1	1	1	1	
	8.7t	8.7t	8.7t	8.7t	8.7t	8.7t	8.7t	8.7t	8.7t	8.7t	8.7t	8.7t	8.7t	8.7t	8.7t	8.7t	8.7t	8.7t	8.7t	8.7t	8.7t	8.7t	8.7t	8.7t	

HLJ	1.0m + 24.0m	28.9 t	8.0m x 5.0m	360 °	JPN

m	12.8	12.8	12.8	25.8	25.8	25.8	25.8	25.8	25.8	30.1	30.1	30.1	30.1	30.1	30.1	34.4	34.4	34.4	34.4	34.4	34.4	34.4	34.4	34.4	m
°	5	20	40	5	20	40	5	20	40	5	20	40	5	20	40	5	20	40	5	20	40	5	20	40	°
3.0																									3.0
3.5																									3.5
4.0																									4.0
4.5																									4.5
5.0																									5.0
6.0																									6.0
7.0																									7.0
8.0	5.1																								8.0
9.0	5.1																								9.0
10.0	5.1			4.9			3.7																		10.0
11.0	5.1			4.9			3.7			4.6			4.3												11.0
12.0	5.1	4.5		4.9			3.7			4.6			4.3			4.2			4.0			3.2			12.0
14.0	4.8	4.0		4.9	4.4		3.7	3.7		4.6	4.4		4.3	4.3		4.2			4.0			3.2			14.0
16.0	4.3	3.6		4.9	4.1		3.7	3.7		4.6	4.1		4.3	4.1		4.2	4.1		4.0	4.0		3.2	3.2		16.0
18.0	3.8	3.3		4.6	3.8		3.7	3.7		4.6	3.8		4.3	3.9		4.2	3.9		4.0	3.8		3.2	3.2		18.0
20.0	3.4	3.0	2.6	4.3	3.5		3.7	3.4		4.4	3.6		4.3	3.6		4.2	3.6		4.0	3.7		3.2	3.2		20.0
22.0	3.1	2.7	2.4	4.1	3.2	2.6	3.7	3.2	2.5	4.2	3.3	2.6	4.2	3.4	2.6	4.2	3.4	2.6	4.0	3.4		3.2	3.2		22.0
24.0	2.8	2.5	2.2	3.7	3.0	2.4	3.7	3.0	2.4	4.0	3.1	2.5	4.0	3.1	2.5	4.0	3.2	2.5	3.9	3.2	2.5	3.2	3.2	2.5	24.0
26.0	2.6	2.3	2.1	3.5	2.8	2.3	3.4	2.8	2.3	3.7	2.9	2.4	3.7	3.0	2.4	3.9	3.0	2.4	3.8	3.1	2.4	3.2	3.0	2.4	26.0
28.0	2.4	2.2	2.0	3.2	2.7	2.2	3.2	2.6	2.2	3.4	2.8	2.3	3.4	2.8	2.3	3.6	2.9	2.3	3.6	2.9	2.3	3.2	2.8	2.3	28.0
30.0	2.2	2.0		3.0	2.5	2.1	2.9	2.5	2.1	3.2	2.6	2.2	3.2	2.6	2.2	3.4	2.7	2.2	3.4	2.7	2.2	3.2	2.7	2.2	30.0
32.0	2.0	1.9		2.8	2.4	2.0	2.8	2.4	2.0	3.0	2.5	2.1	3.0	2.5	2.1	3.2	2.6	2.1	3.2	2.6	2.1	3.1	2.6	2.1	32.0
34.0				2.6	2.3	2.0	2.6	2.3	2.0	2.8	2.4	2.0	2.8	2.4	2.0	3.0	2.5	2.1	3.0	2.5	2.1	3.0	2.5	2.1	34.0
36.0				2.5	2.2	1.9	2.4	2.1	1.9	2.6	2.3	2.0	2.7	2.3	2.0	2.6	2.4	2.0	2.8	2.4	2.0	2.8	2.4	2.0	36.0
38.0				2.3	2.1		2.3	2.1		2.2	2.2	1.9	2.5	2.2	1.9	2.2	2.3	1.9	2.7	2.3	1.9	2.6	2.3	1.9	38.0
40.0				2.2	2.0		2.2	2.0		1.8	2.1		2.3	2.1		1.8	2.2	1.9	2.4	2.2	1.9	2.5	2.2	1.9	40.0
44.0				1.7			2.0				1.5		1.7	1.9		1.1	1.6		1.8	2.0		2.3	2.0		44.0
48.0																			1.2	1.5		1.9	1.9		48.0
52.0																						1.5			52.0
56.0																									56.0
60.0																									60.0
64.0																									64.0
68.0																									68.0
72.0																									72.0
1	0	0	0	46	46	46	0	0	0	92	92	92	46	46	46	92	92	92	46	46	46	0	0	0	1
2	0	0	0	46	46	46	0	0	0	46	46	46	46	46	46	46	46	46	46	46	46	0	0	0	2
3	0	0	0	46	46	46	0	0	0	46	46	46	46	46	46	46	46	46	46	46	46	46	46	46	3
4	0	0	0	0	0	0	46	46	46	0	0	0	46	46	46	46	46	46	46	46	46	92	92	92	4
5	0	0	0	0	0	0	92	92	92	0	0	0	0	0	0	0	0	0	46	46	46	92	92	92	5
ID	1	1	1	66	66	66	17	17	17	67	67	67	54	54	54	55	55	55	49	49	49	19	19	19	ID
[DEG]	0~81	37~85	59~85	28~81	44~85	57~85	29~81	45~85	58~85	44~81	42~85	59~85	37~81	43~85	59~85	43~81	48~85	59~85	36~81	41~85	59~85	30~81	43~85	60~85	[DEG]
	1	1	1	1	1	1	1	1	1	1	1	1	1	1	1	1	1	1	1	1	1	1	1	1	
	8.7t	8.7t	8.7t	8.7t	8.7t	8.7t	8.7t	8.7t	8.7t	8.7t	8.7t	8.7t	8.7t	8.7t	8.7t	8.7t	8.7t	8.7t	8.7t	8.7t	8.7t	8.7t	8.7t	8.7t	

m	43.0	43.0	43.0	43.0	43.0	43.0	47.4	47.4	47.4	47.4	47.4	47.4	51.7	51.7	51.7	51.7	51.7	51.7	56.0	56.0	56.0	60.0	60.0	60.0	m
°	5	20	40	5	20	40	5	20	40	5	20	40	5	20	40	5	20	40	5	20	40	5	20	40	°
3.0																									3.0
3.5																									3.5
4.0																									4.0
4.5																									4.5
5.0																									5.0
6.0																									6.0
7.0																									7.0
8.0																									8.0
9.0																									9.0
10.0																									10.0
11.0																									11.0
12.0																									12.0
14.0	3.8			2.9																					14.0
16.0	3.8			2.9			3.3			3.1			3.0			2.9									16.0
18.0	3.8	3.8		2.9	2.9		3.3	3.3		3.1	3.1		3.0	3.0		2.9			2.9						18.0
20.0	3.8	3.6		2.9	2.9		3.3	3.3		3.1	3.1		3.0	3.0		2.9	2.9		2.9	2.9		2.4			20.0
22.0	3.8	3.5		2.9	2.9		3.3	3.3		3.1	3.1		3.0	3.0		2.9	2.9		2.9	2.9		2.4	2.4		22.0
24.0	3.8	3.3	2.5	2.9	2.9		3.3	3.3		3.1	3.1		3.0	3.0		2.9	2.9		2.9	2.9		2.4	2.4		24.0
26.0	3.8	3.2	2.4	2.9	2.9	2.4	3.3	3.2	2.4	3.1	3.1	2.4	3.0	3.0		2.9	2.9		2.9	2.9		2.4	2.4		26.0
28.0	3.7	3.0	2.3	2.9	2.9	2.3	3.3	3.0	2.3	3.1	3.0	2.3	3.0	3.0	2.3	2.9	2.9	2.3	2.9	2.9	2.3	2.4	2.4		28.0
30.0	3.5	2.9	2.3	2.9	2.8	2.2	3.3	2.9	2.3	3.1	2.9	2.3	3.0	2.9	2.3	2.9	2.9	2.3	2.9	2.9	2.3	2.4	2.4	2.0	30.0
32.0	3.4	2.8	2.2	2.9	2.7	2.2	3.3	2.8	2.2	3.1	2.8	2.2	3.0	2.8	2.2	2.9	2.8	2.2	2.9	2.8	2.2	2.4	2.4	2.0	32.0
34.0	3.0	2.6	2.1	2.9	2.6	2.1	3.0	2.7	2.1	3.1	2.7	2.1	3.0	2.7	2.2	2.9	2.7	2.2	2.9	2.8	2.2	2.4	2.4	1.9	34.0
36.0	2.6	2.5	2.1	2.9	2.5	2.1	2.5	2.6	2.1	2.9	2.6	2.1	2.5	2.6	2.1	2.9	2.6	2.1	2.6	2.7	2.1	2.4	2.4	1.9	36.0
38.0	2.1	2.4	2.0	2.9	2.4	2.0	2.1	2.5	2.0	2.5	2.5	2.0	2.1	2.5	2.0	2.6	2.5	2.1	2.2	2.6	2.1	2.1	2.3	1.9	38.0
40.0	1.8	2.3	2.0	2.7	2.3	2.0	1.7	2.3	2.0	2.1	2.4	2.0	1.7	2.3	2.0	2.2	2.4	2.0	1.8	2.4	2.0	1.7	2.3	1.8	40.0
44.0		1.6	1.9	2.1	2.2	1.9		1.5	1.9	1.4	1.9	1.9		1.6	1.9	1.5	2.0	1.9		1.7	1.9		1.6	1.7	44.0
48.0				1.5	1.8				1.3		1.3	1.7			1.4		1.4	1.8			1.5			1.5	48.0
52.0					1.3																				52.0
56.0																									56.0
60.0																									60.0
64.0																									64.0
68.0																									68.0
72.0																									72.0
1	92	92	92	0	0	0	92	92	92	46	46	46	92	92	92	46	46	46	92	92	92	100	100	100	1
2	92	92	92	46	46	46	92	92	92	92	92	92	92	92	92	92	92	92	92	92	92	100	100	100	2
3	46	46	46	92	92	92	92	92	92	92	92	92	92	92	92	92	92	92	92	92	92	100	100	100	3
4	46	46	46	92	92	92	46	46	46	92	92	92	92	92	92	92	92	92	92	92	92	100	100	100	4
5	46	46	46	92	92	92	46	46	46	46	46	46	46	46	46	92	92	92	92	92	92	100	100	100	5
ID	42	42	42	21	21	21	38	38	38	31	31	31	32	32	32	23	23	23	24	24	24	16	16	16	ID
[DEG]	57~81	57~85	61~85	49~81	47~85	62~85	60~81	60~85	60~85	56~81	56~85	60~85	63~81	63~85	63~85	59~81	59~85	63~85	65~81	66~85	66~85	67~81	68~85	68~85	[DEG]
	1	1	1	1	1	1	1	1	1	1	1	1	1	1	1	1	1	1	1	1	1	1	1	1	
	8.7t	8.7t	8.7t	8.7t	8.7t	8.7t	8.7t	8.7t	8.7t	8.7t	8.7t	8.7t	8.7t	8.7t	8.7t	8.7t	8.7t	8.7t	8.7t	8.7t	8.7t	8.7t	8.7t	8.7t	

油圧チルトジブ

HLJ	1.0m + 31.0m	28.9 t	8.0m x 5.0m	360 °	JPN

m	12.8	12.8	12.8	25.8	25.8	25.8	25.8	25.8	25.8	30.1	30.1	30.1	30.1	30.1	30.1	34.4	34.4	34.4	34.4	34.4	34.4	34.4	34.4	34.4	m
°	5	20	40	5	20	40	5	20	40	5	20	40	5	20	40	5	20	40	5	20	40	5	20	40	°
3.0																									3.0
3.5																									3.5
4.0																									4.0
4.5																									4.5
5.0																									5.0
6.0																									6.0
7.0																									7.0
8.0																									8.0
9.0																									9.0
10.0	3.5																								10.0
11.0	3.5																								11.0
12.0	3.5			3.3			2.6																		12.0
14.0	3.5			3.3			2.6			3.1			2.9			2.9			2.8			2.3			14.0
16.0	3.5	3.0		3.3			2.6			3.1			2.9			2.9			2.8			2.3			16.0
18.0	3.2	2.7		3.3	3.0		2.6	2.6		3.1	3.0		2.9	2.9		2.9			2.8			2.3			18.0
20.0	2.9	2.5		3.3	2.7		2.6	2.6		3.1	2.8		2.9	2.8		2.9	2.8		2.8	2.8		2.3	2.3		20.0
22.0	2.6	2.2		3.3	2.5		2.6	2.5		3.1	2.6		2.9	2.6		2.9	2.6		2.8	2.6		2.3	2.3		22.0
24.0	2.3	2.0	1.7	3.0	2.3		2.6	2.3		3.1	2.4		2.9	2.4		2.9	2.4		2.8	2.4		2.3	2.3		24.0
26.0	2.1	1.9	1.6	2.7	2.2	1.7	2.6	2.1		2.9	2.2		2.9	2.2		2.9	2.3		2.8	2.3		2.3	2.2		26.0
28.0	1.9	1.7	1.5	2.5	2.0	1.6	2.5	2.0	1.6	2.7	2.1	1.6	2.7	2.1	1.6	2.8	2.2	1.6	2.8	2.2		2.3	2.1		28.0
30.0	1.7	1.6	1.4	2.3	1.9	1.5	2.3	1.9	1.5	2.5	2.0	1.5	2.5	2.0	1.5	2.6	2.0	1.6	2.6	2.0	1.6	2.3	2.0	1.5	30.0
32.0	1.6	1.5	1.3	2.2	1.8	1.4	2.1	1.8	1.4	2.3	1.9	1.5	2.3	1.9	1.5	2.4	1.9	1.5	2.4	1.9	1.5	2.3	1.9	1.5	32.0
34.0	1.5	1.4	1.2	2.0	1.7	1.4	2.0	1.7	1.4	2.1	1.7	1.4	2.2	1.8	1.4	2.3	1.8	1.4	2.3	1.8	1.4	2.2	1.8	1.4	34.0
36.0	1.4	1.3	1.2	1.9	1.6	1.3	1.8	1.6	1.3	2.0	1.7	1.3	2.0	1.7	1.3	2.1	1.7	1.4	2.1	1.7	1.4	2.1	1.7	1.4	36.0
38.0	1.3	1.2		1.7	1.5	1.3	1.7	1.5	1.3	1.9	1.6	1.3	1.9	1.6	1.3	2.0	1.6	1.3	2.0	1.6	1.3	2.0	1.6	1.3	38.0
40.0	1.2			1.6	1.4	1.2	1.6	1.4	1.2	1.8	1.5	1.2	1.8	1.5	1.2	1.9	1.6	1.3	1.9	1.6	1.3	1.9	1.5	1.3	40.0
44.0				1.4	1.3		1.4	1.3		1.4	1.3	1.2	1.6	1.3	1.2	1.4	1.4	1.2	1.7	1.4	1.2	1.6	1.4	1.2	44.0
48.0				1.3	1.2		1.3	1.2			1.2		1.3	1.2			1.3	1.1	1.4	1.3	1.1	1.5	1.3	1.1	48.0
52.0							1.1							1.1						1.2		1.3	1.2		52.0
56.0																						1.2	1.1		56.0
60.0																									60.0
64.0																									64.0
68.0																									68.0
72.0																									72.0
1	0	0	0	46	46	46	0	0	0	92	92	92	46	46	46	92	92	92	46	46	46	0	0	0	1
2	0	0	0	46	46	46	0	0	0	46	46	46	46	46	46	46	46	46	46	46	46	0	0	0	2
3	0	0	0	46	46	46	0	0	0	46	46	46	46	46	46	46	46	46	46	46	46	46	46	46	3
4	0	0	0	0	0	0	46	46	46	0	0	0	46	46	46	46	46	46	46	46	46	92	92	92	4
5	0	0	0	0	0	0	92	92	92	0	0	0	0	0	0	0	0	0	46	46	46	92	92	92	5
ID	1	1	1	66	66	66	17	17	17	67	67	67	54	54	54	55	55	55	49	49	49	19	19	19	ID
[DEG]	0~81	40~85	56~85	35~81	41~85	63~85	26~81	42~85	64~85	48~81	48~85	60~85	42~81	40~85	60~85	52~81	53~85	58~85	47~81	47~85	58~85	36~81	41~85	59~85	[DEG]
	1	1	1	1	1	1	1	1	1	1	1	1	1	1	1	1	1	1	1	1	1	1	1	1	
	8.7t	8.7t	8.7t	8.7t	8.7t	8.7t	8.7t	8.7t	8.7t	8.7t	8.7t	8.7t	8.7t	8.7t	8.7t	8.7t	8.7t	8.7t	8.7t	8.7t	8.7t	8.7t	8.7t	8.7t	

m	43.0	43.0	43.0	43.0	43.0	43.0	47.4	47.4	47.4	47.4	47.4	47.4	51.7	51.7	51.7	51.7	51.7	51.7	56.0	56.0	56.0	60.0	60.0	60.0	m
°	5	20	40	5	20	40	5	20	40	5	20	40	5	20	40	5	20	40	5	20	40	5	20	40	°
3.0																									3.0
3.5																									3.5
4.0																									4.0
4.5																									4.5
5.0																									5.0
6.0																									6.0
7.0																									7.0
8.0																									8.0
9.0																									9.0
10.0																									10.0
11.0																									11.0
12.0																									12.0
14.0																									14.0
16.0	2.7			2.1																					16.0
18.0	2.7			2.1			2.4			2.2			2.2			2.1									18.0
20.0	2.7			2.1			2.4			2.2			2.2			2.1									20.0
22.0	2.7	2.6		2.1	2.1		2.4	2.4		2.2	2.2		2.2			2.1			2.1			1.6			22.0
24.0	2.7	2.5		2.1	2.1		2.4	2.4		2.2	2.2		2.2	2.2		2.1	2.1		2.1	2.1		1.6			24.0
26.0	2.7	2.3		2.1	2.1		2.4	2.3		2.2	2.2		2.2	2.2		2.1	2.1		2.1	2.1		1.6	1.6		26.0
28.0	2.7	2.2		2.1	2.1		2.4	2.2		2.2	2.2		2.2	2.2		2.1	2.1		2.1	2.1		1.6	1.6		28.0
30.0	2.7	2.1	1.6	2.1	2.1		2.4	2.1		2.2	2.1		2.2	2.1		2.1	2.1		2.1	2.1		1.6	1.6		30.0
32.0	2.6	2.0	1.5	2.1	2.0	1.5	2.4	2.0	1.5	2.2	2.0	1.5	2.2	2.0		2.1	2.0		2.1	2.0		1.6	1.6		32.0
34.0	2.5	1.9	1.4	2.1	1.9	1.4	2.4	1.9	1.5	2.2	1.9	1.4	2.2	1.9	1.4	2.1	1.9	1.4	2.1	1.9	1.4	1.6	1.6		34.0
36.0	2.3	1.8	1.4	2.1	1.8	1.4	2.4	1.8	1.4	2.2	1.8	1.4	2.2	1.9	1.4	2.1	1.8	1.4	2.1	1.9	1.4	1.6	1.6	1.2	36.0
38.0	2.2	1.7	1.3	2.1	1.7	1.3	2.3	1.8	1.4	2.2	1.8	1.4	2.2	1.8	1.4	2.1	1.8	1.4	2.1	1.8	1.4	1.6	1.6	1.2	38.0
40.0	2.0	1.7	1.3	2.0	1.6	1.3	1.9	1.7	1.3	2.2	1.7	1.3	1.9	1.7	1.3	2.1	1.7	1.3	1.9	1.7	1.3	1.6	1.6	1.2	40.0
44.0	1.3	1.5	1.2	1.8	1.5	1.2		1.5	1.2	1.6	1.5	1.2		1.6	1.2	1.6	1.6	1.2		1.6	1.2		1.5	1.1	44.0
48.0		1.2	1.2	1.6	1.4	1.2			1.2		1.4	1.2			1.2		1.5	1.2			1.2			1.1	48.0
52.0			1.1	1.1	1.3	1.1			1.1			1.1			1.1			1.1			1.1				52.0
56.0																									56.0
60.0																									60.0
64.0																									64.0
68.0																									68.0
72.0																									72.0
1	92	92	92	0	0	0	92	92	92	46	46	46	92	92	92	46	46	46	92	92	92	100	100	100	1
2	92	92	92	46	46	46	92	92	92	92	92	92	92	92	92	92	92	92	92	92	92	100	100	100	2
3	46	46	46	92	92	92	92	92	92	92	92	92	92	92	92	92	92	92	92	92	92	100	100	100	3
4	46	46	46	92	92	92	46	46	46	92	92	92	92	92	92	92	92	92	92	92	92	100	100	100	4
5	46	46	46	92	92	92	46	46	46	46	46	46	46	46	46	92	92	92	92	92	92	100	100	100	5
ID	42	42	42	21	21	21	38	38	38	31	31	31	32	32	32	23	23	23	24	24	24	16	16	16	ID
[DEG]	58~81	60~85	60~85	51~81	57~85	61~85	65~81	67~85	64~85	62~81	63~85	64~85	67~81	69~85	67~85	64~81	66~85	67~85	69~81	71~85	69~85	71~81	73~85	74~85	[DEG]
	1	1	1	1	1	1	1	1	1	1	1	1	1	1	1	1	1	1	1	1	1	1	1	1	
	8.7t	8.7t	8.7t	8.7t	8.7t	8.7t	8.7t	8.7t	8.7t	8.7t	8.7t	8.7t	8.7t	8.7t	8.7t	8.7t	8.7t	8.7t	8.7t	8.7t	8.7t	8.7t	8.7t	8.7t	

HLJ	1.0m + 2.8m	25.4 t	8.0m x 7.5m	360 °	JPN

m	12.8	12.8	12.8	25.8	25.8	25.8	25.8	25.8	25.8	30.1	30.1	30.1	30.1	30.1	30.1	34.4	34.4	34.4	34.4	34.4	34.4	34.4	34.4	34.4	m
°	5	20	40	5	20	40	5	20	40	5	20	40	5	20	40	5	20	40	5	20	40	5	20	40	°
3.0		31.6	25.3																						3.0
3.5	38.1	30.3	24.6		31.4			25.0																	3.5
4.0	36.1	29.1	23.9		30.6	23.4		24.2						31.2											4.0
4.5	34.3	28.0	23.3		29.8	23.1		23.3	21.5		30.2			30.4											4.5
5.0	32.7	27.0	22.8		29.0	22.7		22.4	20.6		29.5	22.8		29.8	22.9		29.9			24.9			16.9		5.0
6.0	29.9	25.3	21.8		27.7	22.0		20.5	19.0		28.3	22.2		28.5	22.3		28.9	22.5		24.9	23.0		16.9	16.9	6.0
7.0	27.7	23.8	20.9		26.5	21.3		18.9	17.7		27.1	21.6		27.4	21.7		27.9	22.0		24.9	22.4		16.9	16.9	7.0
8.0	25.7	22.6	20.2	32.0	25.4	20.8	18.6	17.5	16.5		26.1	21.1		26.3	21.2		26.9	21.5		24.3	21.9		16.9	16.7	8.0
9.0	24.1	21.5		30.3	24.4	20.2	17.3	16.3	15.5	32.0	25.2	20.6	32.2	25.4	20.7		26.0	21.0		23.1	20.9		16.2	15.9	9.0
10.0	22.7	20.6		28.7	23.5	19.7	16.1	15.3	14.6	30.1	24.3	20.2	30.7	24.5	20.2		25.2	20.6	24.4	22.1	20.1		15.3	14.9	10.0
11.0	21.5	19.9		27.4	22.7	19.3	15.1	14.4	13.7	28.0	23.6	19.8	29.4	23.7	19.8	26.1	24.4	20.2	23.2	21.1	19.3	14.8	14.4	14.0	11.0
12.0	20.6	19.3		26.2	21.9	18.9	14.2	13.6	13.0	26.1	22.8	19.4	28.1	23.0	19.4	24.4	23.7	19.8	22.1	20.2	18.6	13.9	13.5	13.2	12.0
14.0				21.4	20.6	18.2	12.6	12.2	11.8	20.8	21.2	18.7	21.9	21.7	18.7	21.3	21.2	19.1	20.3	18.7	17.4	12.3	12.1	11.8	14.0
16.0				17.1	17.3	17.5	11.4	11.1	10.8	16.6	16.8	17.1	17.6	17.8	18.0	17.0	17.3	17.5	18.2	17.4	16.3	11.1	10.9	10.6	16.0
18.0				14.0	14.1		10.3	10.0		13.4	13.6	13.8	14.4	14.6	14.7	13.9	14.1	14.3	15.1	15.2	15.4	9.9	9.8	9.7	18.0
20.0				11.6	11.7		9.3	9.2		11.0	11.2		12.0	12.1		11.5	11.7	11.8	12.6	12.8	12.9	8.9	8.8	8.8	20.0
22.0				9.7	9.8		8.5	8.4		9.2	9.3		10.1	10.2		9.6	9.7		10.7	10.8		8.1	8.0		22.0
24.0				8.1			7.9			7.6	7.7		8.5	8.6		8.1	8.2		9.1	9.2		7.4	7.3		24.0
26.0										6.3	6.4		7.3	7.3		6.8	6.9		7.8	7.9		6.8	6.7		26.0
28.0										5.3			6.2			5.7	5.8		6.7	6.8		6.2	6.2		28.0
30.0																4.8			5.8			5.8			30.0
32.0																4.0			5.0			5.4			32.0
34.0																									34.0
36.0																									36.0
38.0																									38.0
40.0																									40.0
44.0																									44.0
48.0																									48.0
52.0																									52.0
56.0																									56.0
60.0																									60.0
64.0																									64.0
68.0																									68.0
72.0																									72.0
1	0	0	0	46	46	46	0	0	0	92	92	92	46	46	46	92	92	92	46	46	46	0	0	0	1
2	0	0	0	46	46	46	0	0	0	46	46	46	46	46	46	46	46	46	46	46	46	0	0	0	2
3	0	0	0	46	46	46	0	0	0	46	46	46	46	46	46	46	46	46	46	46	46	46	46	46	3
4	0	0	0	0	0	0	46	46	46	0	0	0	46	46	46	46	46	46	46	46	46	92	92	92	4
5	0	0	0	0	0	0	92	92	92	0	0	0	0	0	0	0	0	0	46	46	46	92	92	92	5
ID	1	1	1	66	66	66	17	17	17	67	67	67	54	54	54	55	55	55	49	49	49	19	19	19	ID
[DEG]	0~76	34~85	58~85	29~76	38~85	56~85	29~76	38~85	57~85	29~76	37~85	58~85	28~76	36~85	58~85	28~76	41~85	59~85	28~76	41~85	59~85	29~76	41~85	59~85	[DEG]
	5	5	5	4	4	4	3	3	3	4	4	4	4	4	4	4	4	4	3	3	3	2	2	2	
	60t	60t	60t	60t	60t	60t	26t	26t	26t	60t	60t	60t	60t	60t	60t	60t	60t	60t	26t	26t	26t	26t	26t	26t	

m	43.0	43.0	43.0	43.0	43.0	43.0	47.4	47.4	47.4	47.4	47.4	47.4	51.7	51.7	51.7	51.7	51.7	51.7	56.0	56.0	56.0	60.0	60.0	60.0	m
°	5	20	40	5	20	40	5	20	40	5	20	40	5	20	40	5	20	40	5	20	40	5	20	40	°
3.0																									3.0
3.5																									3.5
4.0																									4.0
4.5																									4.5
5.0																									5.0
6.0																									6.0
7.0		17.1	17.1		12.1	12.1		13.9			12.4														7.0
8.0		17.1	17.1		12.1	12.1		13.9	13.9		12.4	12.4		11.1			9.8								8.0
9.0		17.1	17.1		12.1	12.1		13.9	13.9		12.4	12.4		11.1	11.1		9.8	9.8		9.0	9.0		7.8		9.0
10.0		17.1	17.1		12.1	12.1		13.9	13.9		12.4	12.4		11.1	11.1		9.8	9.8		9.0	9.0		7.8	7.8	10.0
11.0		17.1	17.1		12.1	12.1		13.9	13.9		12.4	12.4		11.1	11.1		9.8	9.8		9.0	9.0		7.8	7.8	11.0
12.0		17.1	17.1		12.1	12.1		13.9	13.9		12.4	12.4		11.1	11.1		9.8	9.8		9.0	9.0		7.8	7.8	12.0
14.0	17.1	17.1	17.1	12.1	12.1	12.1		13.9	13.9		12.4	12.4		11.1	11.1		9.8	9.8		9.0	9.0		7.8	7.8	14.0
16.0	17.1	17.1	16.8	11.5	11.4	11.2	13.9	13.9	13.9	12.4	12.4	12.4	11.1	11.1	11.1	9.8	9.8	9.8		9.0	9.0		7.8	7.8	16.0
18.0	14.5	14.7	14.9	10.4	10.3	10.2	13.9	13.9	13.7	12.4	12.1	11.8	11.1	11.1	11.1	9.8	9.8	9.8	9.0	9.0	9.0		7.8	7.8	18.0
20.0	12.1	12.3	12.4	9.5	9.4	9.3	12.2	12.4	12.5	11.4	11.1	10.9	11.1	11.1	11.1	9.8	9.8	9.8	9.0	9.0	9.0	7.8	7.8	7.8	20.0
22.0	10.2	10.3	10.5	8.7	8.6	8.5	10.3	10.4	10.6	10.5	10.3	10.1	10.5	10.7	10.5	9.5	9.4	9.3	9.0	9.0	9.0	7.8	7.8	7.8	22.0
24.0	8.6	8.7	8.9	8.0	7.9	7.8	8.7	8.9	9.0	9.4	9.5	9.4	8.9	9.1	9.2	8.9	8.7	8.6	9.0	9.0	8.9	7.6	7.4	7.3	24.0
26.0	7.3	7.4	7.5	7.4	7.3	7.3	7.4	7.5	7.6	8.0	8.2	8.2	7.6	7.8	7.9	8.2	8.1	8.0	7.9	8.0	8.1	7.1	6.9	6.8	26.0
28.0	6.2	6.3		6.8	6.8		6.3	6.4	6.5	6.9	7.0	7.1	6.5	6.6	6.7	7.2	7.3	7.4	6.8	6.9	7.0	6.6	6.5	6.4	28.0
30.0	5.3	5.4		6.4	6.3		5.4	5.5		6.0	6.1		5.6	5.7	5.8	6.3	6.4	6.4	5.9	6.0	6.1	5.9	6.0	6.0	30.0
32.0	4.5	4.6		6.0	5.9		4.6	4.7		5.2	5.3		4.8	4.9		5.5	5.5		5.1	5.2	5.2	5.1	5.2	5.2	32.0
34.0	3.8	3.9		5.3	5.4		3.9	4.0		4.5	4.6		4.1	4.2		4.8	4.8		4.4	4.5		4.4	4.5	4.5	34.0
36.0	3.2	3.2		4.7	4.7		3.3	3.4		3.9	4.0		3.5	3.6		4.2	4.2		3.8	3.8		3.8	3.8		36.0
38.0	2.6			4.2			2.8	2.8		3.4	3.4		3.0	3.0		3.6	3.7		3.2	3.3		3.2	3.3		38.0
40.0	2.1			3.7			2.2	2.3		2.9	2.9		2.5	2.5		3.1	3.2		2.8	2.8		2.8	2.8		40.0
44.0							1.4			2.0			1.6			2.3			1.9	1.9		1.9	1.9		44.0
48.0																1.6			1.2			1.2	1.2		48.0
52.0																									52.0
56.0																									56.0
60.0																									60.0
64.0																									64.0
68.0																									68.0
72.0																									72.0
1	92	92	92	0	0	0	92	92	92	46	46	46	92	92	92	46	46	46	92	92	92	100	100	100	1
2	92	92	92	46	46	46	92	92	92	92	92	92	92	92	92	92	92	92	92	92	92	100	100	100	2
3	46	46	46	92	92	92	92	92	92	92	92	92	92	92	92	92	92	92	92	92	92	100	100	100	3
4	46	46	46	92	92	92	46	46	46	92	92	92	92	92	92	92	92	92	92	92	92	100	100	100	4
5	46	46	46	92	92	92	46	46	46	46	46	46	46	46	46	92	92	92	92	92	92	100	100	100	5
ID	42	42	42	21	21	21	38	38	38	31	31	31	32	32	32	23	23	23	24	24	24	16	16	16	ID
[DEG]	28~76	39~85	58~85	29~76	39~85	58~85	28~76	38~85	59~85	28~76	38~85	59~85	37~76	45~85	60~85	28~76	45~85	60~85	37~76	44~85	61~85	42~76	43~85	62~85	[DEG]
	2	2	2	2	2	2	2	2	2	2	2	2	2	2	2	2	2	2	2	2	2	2	2	2	
	26t	26t	26t	26t	26t	26t	26t	26t	26t	26t	26t	26t	26t	26t	26t	26t	26t	26t	26t	26t	26t	26t	26t	26t	

油圧チルトジブ

HLJ	1.0m + 9.2m	25.4 t	8.0m x 7.5m	360 °	JPN

m	12.8	12.8	12.8	25.8	25.8	25.8	25.8	25.8	25.8	30.1	30.1	30.1	30.1	30.1	30.1	34.4	34.4	34.4	34.4	34.4	34.4	34.4	34.4	34.4	m
°	5	20	40	5	20	40	5	20	40	5	20	40	5	20	40	5	20	40	5	20	40	5	20	40	°
3.0																									3.0
3.5																									3.5
4.0	15.0																								4.0
4.5	15.0																								4.5
5.0	15.0	13.5																							5.0
6.0	15.0	12.4			14.4			14.1																	6.0
7.0	14.8	11.4	8.9	15.0	13.5		14.3	13.3			13.6			13.8			13.8			13.4					7.0
8.0	13.4	10.6	8.4	15.0	12.8		14.3	12.5		15.0	12.9		15.0	13.1			13.2			13.3			10.1		8.0
9.0	12.2	9.9	8.0	15.0	12.1	8.7	14.0	11.9	8.6	15.0	12.3	8.8	15.0	12.5	8.8	15.0	12.6		13.4	12.7			10.1		9.0
10.0	11.2	9.2	7.6	15.0	11.5	8.4	13.2	11.3	8.4	15.0	11.8	8.5	15.0	11.9	8.6	15.0	12.1	8.6	13.4	12.2	8.6	10.1	10.1		10.0
11.0	10.4	8.7	7.3	15.0	10.9	8.2	12.5	10.8	8.1	15.0	11.3	8.3	15.0	11.4	8.3	15.0	11.6	8.4	13.4	11.7	8.4	10.1	10.1	8.3	11.0
12.0	9.6	8.2	7.0	14.2	10.4	7.9	11.7	10.3	7.9	15.0	10.8	8.1	15.0	10.9	8.1	15.0	11.1	8.2	13.4	11.2	8.2	10.1	10.1	8.1	12.0
14.0	8.4	7.4	6.5	12.6	9.6	7.5	10.3	9.4	7.4	13.5	10.0	7.7	13.7	10.1	7.7	14.4	10.3	7.8	13.4	10.4	7.8	10.1	9.9	7.8	14.0
16.0	7.5	6.8		11.3	8.9	7.1	9.1	8.4	7.1	12.2	9.3	7.3	12.3	9.3	7.3	13.1	9.7	7.5	13.2	9.7	7.5	9.7	9.2	7.4	16.0
18.0	6.8			10.2	8.3	6.8	8.1	7.6	6.8	11.1	8.7	7.0	11.2	8.7	7.0	11.9	9.1	7.2	12.0	9.1	7.2	8.7	8.4	7.1	18.0
20.0				9.3	7.7	6.5	7.3	6.9	6.5	10.2	8.2	6.7	10.2	8.2	6.8	11.0	8.6	6.9	11.0	8.6	6.9	7.8	7.6	6.9	20.0
22.0				8.6	7.3	6.3	6.7	6.3	6.1	9.4	7.7	6.5	9.4	7.8	6.5	10.1	8.1	6.7	10.2	8.2	6.7	7.1	6.9	6.7	22.0
24.0				8.0	6.9		6.1	5.8		8.6	7.3	6.3	8.8	7.4	6.3	8.8	7.7	6.5	9.5	7.7	6.5	6.4	6.3	6.2	24.0
26.0				7.4	6.6		5.6	5.4		7.3	7.0		8.1	7.0		7.5	7.4	6.3	8.4	7.4	6.3	5.9	5.8	5.7	26.0
28.0				6.8	6.3		5.2	5.0		6.2	6.5		7.0	6.7		6.4	6.8		7.3	7.1		5.4	5.3		28.0
30.0				5.9			4.8			5.3	5.5		6.1	6.3		5.5	5.8		6.3	6.6		5.0	4.9		30.0
32.0										4.5	4.7		5.3	5.5		4.7	5.0		5.5	5.8		4.6	4.6		32.0
34.0										3.8			4.6			4.0	4.2		4.9	5.0		4.3	4.3		34.0
36.0																3.4			4.3			4.0			36.0
38.0																2.9			3.7			3.7			38.0
40.0																									40.0
44.0																									44.0
48.0																									48.0
52.0																									52.0
56.0																									56.0
60.0																									60.0
64.0																									64.0
68.0																									68.0
72.0																									72.0
1	0	0	0	46	46	46	0	0	0	92	92	92	46	46	46	92	92	92	46	46	46	0	0	0	1
2	0	0	0	46	46	46	0	0	0	46	46	46	46	46	46	46	46	46	46	46	46	0	0	0	2
3	0	0	0	46	46	46	0	0	0	46	46	46	46	46	46	46	46	46	46	46	46	46	46	46	3
4	0	0	0	0	0	0	46	46	46	0	0	0	46	46	46	46	46	46	46	46	46	92	92	92	4
5	0	0	0	0	0	0	92	92	92	0	0	0	0	0	0	0	0	0	46	46	46	92	92	92	5
ID	1	1	1	66	66	66	17	17	17	67	67	67	54	54	54	55	55	55	49	49	49	19	19	19	ID
[DEG]	0~79	44~85	57~85	27~79	37~85	56~85	28~79	38~85	57~85	27~79	37~85	58~85	27~79	36~85	57~85	27~79	40~85	58~85	27~79	41~85	59~85	28~79	41~85	59~85	[DEG]
	2	2	2	2	2	2	2	2	2	2	2	2	2	2	2	2	2	2	2	2	2	2	2	2	
	26t	26t	26t	26t	26t	26t	26t	26t	26t	26t	26t	26t	26t	26t	26t	26t	26t	26t	26t	26t	26t	26t	26t	26t	

m	43.0	43.0	43.0	43.0	43.0	43.0	47.4	47.4	47.4	47.4	47.4	47.4	51.7	51.7	51.7	51.7	51.7	51.7	56.0	56.0	56.0	60.0	60.0	60.0	m
°	5	20	40	5	20	40	5	20	40	5	20	40	5	20	40	5	20	40	5	20	40	5	20	40	°
3.0																									3.0
3.5																									3.5
4.0																									4.0
4.5																									4.5
5.0																									5.0
6.0																									6.0
7.0																									7.0
8.0																									8.0
9.0		10.6			7.2																				9.0
10.0		10.6			7.2			8.4			7.5														10.0
11.0		10.6			7.2			8.4			7.5			7.0			6.4			6.4					11.0
12.0	10.6	10.6	8.3	7.2	7.2	7.2		8.4			7.5			7.0			6.4			6.4			5.7		12.0
14.0	10.6	10.6	7.9	7.2	7.2	7.2	8.4	8.4	8.0	7.5	7.5	7.5		7.0	7.0	6.4	6.4	6.4		6.4			5.7		14.0
16.0	10.6	10.2	7.6	7.2	7.2	7.2	8.4	8.4	7.7	7.5	7.5	7.5	7.0	7.0	7.0	6.4	6.4	6.4	6.4	6.4	6.4		5.7	5.7	16.0
18.0	10.6	9.6	7.4	7.2	7.2	7.2	8.4	8.4	7.4	7.5	7.5	7.5	7.0	7.0	7.0	6.4	6.4	6.4	6.4	6.4	6.4	5.7	5.7	5.7	18.0
20.0	10.6	9.2	7.1	7.2	7.2	7.1	8.4	8.4	7.2	7.5	7.5	7.2	7.0	7.0	7.0	6.4	6.4	6.4	6.4	6.4	6.4	5.7	5.7	5.7	20.0
22.0	10.5	8.7	6.9	7.2	7.2	6.9	8.4	8.4	7.0	7.5	7.5	7.0	7.0	7.0	7.0	6.4	6.4	6.4	6.4	6.4	6.4	5.7	5.7	5.7	22.0
24.0	9.0	8.3	6.7	7.2	7.0	6.7	8.4	8.4	6.8	7.5	7.5	6.8	7.0	7.0	6.9	6.4	6.4	6.4	6.4	6.4	6.4	5.7	5.7	5.5	24.0
26.0	7.7	8.0	6.6	6.8	6.6	6.4	7.9	8.2	6.6	7.5	7.5	6.7	7.0	7.0	6.7	6.4	6.4	6.4	6.4	6.4	6.4	5.5	5.4	5.2	26.0
28.0	6.6	7.0	6.4	6.3	6.2	6.0	6.8	7.2	6.5	7.3	7.4	6.5	6.9	7.0	6.6	6.4	6.4	6.2	6.4	6.4	6.2	5.4	5.1	4.9	28.0
30.0	5.7	6.0	6.3	5.8	5.7	5.6	5.8	6.2	6.3	6.4	6.7	6.3	6.0	6.3	6.4	6.4	6.1	5.9	6.2	6.2	5.9	5.0	4.8	4.6	30.0
32.0	4.9	5.2	5.5	5.3	5.3	5.3	5.0	5.4	5.7	5.6	5.9	6.2	5.2	5.5	5.8	5.8	5.8	5.7	5.4	5.7	5.7	4.7	4.5	4.3	32.0
34.0	4.2	4.5		4.9	4.9		4.3	4.6	4.9	4.9	5.1	5.4	4.5	4.8	5.1	5.1	5.3	5.4	4.7	5.0	5.3	4.4	4.2	4.1	34.0
36.0	3.6	3.8		4.6	4.6		3.7	4.0		4.3	4.5		3.9	4.1	4.4	4.4	4.7	4.9	4.1	4.3	4.6	4.0	4.0	3.9	36.0
38.0	3.1	3.3		4.2	4.3		3.2	3.4		3.7	3.9		3.3	3.6		3.9	4.1		3.5	3.8	4.0	3.5	3.7	3.7	38.0
40.0	2.6	2.8		3.9	4.0		2.7	2.9		3.2	3.4		2.8	3.1		3.4	3.6		3.0	3.3		3.0	3.2	3.5	40.0
44.0	1.6			3.2			1.8	2.0		2.4	2.6		1.9	2.2		2.6	2.8		2.2	2.4		2.1	2.4		44.0
48.0				2.5						1.6			1.1	1.3		1.9	2.0		1.4	1.6		1.3	1.6		48.0
52.0																1.2									52.0
56.0																									56.0
60.0																									60.0
64.0																									64.0
68.0																									68.0
72.0																									72.0
1	92	92	92	0	0	0	92	92	92	46	46	46	92	92	92	46	46	46	92	92	92	100	100	100	1
2	92	92	92	46	46	46	92	92	92	92	92	92	92	92	92	92	92	92	92	92	92	100	100	100	2
3	46	46	46	92	92	92	92	92	92	92	92	92	92	92	92	92	92	92	92	92	92	100	100	100	3
4	46	46	46	92	92	92	46	46	46	92	92	92	92	92	92	92	92	92	92	92	92	100	100	100	4
5	46	46	46	92	92	92	46	46	46	46	46	46	46	46	46	92	92	92	92	92	92	100	100	100	5
ID	42	42	42	21	21	21	38	38	38	31	31	31	32	32	32	23	23	23	24	24	24	16	16	16	ID
[DEG]	32~79	43~85	58~85	22~79	44~85	58~85	40~79	42~85	59~85	32~79	42~85	59~85	39~79	41~85	60~85	32~79	41~85	60~85	45~79	47~85	61~85	49~79	51~85	62~85	[DEG]
	2	2	2	1	1	1	1	1	1	1	1	1	1	1	1	1	1	1	1	1	1	1	1	1	
	26t	26t	26t	8.7t	8.7t	8.7t	8.7t	8.7t	8.7t	8.7t	8.7t	8.7t	8.7t	8.7t	8.7t	8.7t	8.7t	8.7t	8.7t	8.7t	8.7t	8.7t	8.7t	8.7t	

HLJ	1.0m + 17.0m	25.4 t	8.0m x 7.5m	360 °	JPN

m	12.8	12.8	12.8	25.8	25.8	25.8	25.8	25.8	25.8	30.1	30.1	30.1	30.1	30.1	30.1	34.4	34.4	34.4	34.4	34.4	34.4	34.4	34.4	34.4	m
°	5	20	40	5	20	40	5	20	40	5	20	40	5	20	40	5	20	40	5	20	40	5	20	40	°
3.0																									3.0
3.5																									3.5
4.0																									4.0
4.5																									4.5
5.0																									5.0
6.0	7.3																								6.0
7.0	6.8																								7.0
8.0	6.4	5.4		7.0			5.6																		8.0
9.0	6.0	5.1		6.7			5.6			6.7			6.5												9.0
10.0	5.7	4.8		6.4	5.0		5.6	4.8		6.5			6.3			6.3			5.9			4.6			10.0
11.0	5.3	4.6		6.1	4.8		5.6	4.6		6.2	4.9		6.1	4.8		6.1	4.8		5.9	4.7		4.6			11.0
12.0	5.1	4.4		5.8	4.7		5.5	4.5		6.0	4.7		5.9	4.6		5.9	4.7		5.7	4.6		4.6	4.4		12.0
14.0	4.6	4.0	3.5	5.4	4.4		5.1	4.2		5.5	4.4		5.4	4.4		5.5	4.4		5.4	4.3		4.6	4.2		14.0
16.0	4.2	3.7	3.3	5.0	4.1	3.4	4.8	3.9	3.3	5.1	4.2	3.4	5.1	4.1	3.4	5.2	4.2	3.4	5.1	4.1		4.6	4.0		16.0
18.0	3.8	3.4	3.1	4.6	3.9	3.3	4.4	3.7	3.2	4.8	3.9	3.3	4.8	3.9	3.3	4.9	3.9	3.3	4.8	3.9	3.2	4.6	3.8	3.2	18.0
20.0	3.5	3.2	3.0	4.3	3.7	3.1	4.2	3.5	3.1	4.5	3.7	3.2	4.5	3.7	3.2	4.6	3.8	3.2	4.5	3.7	3.1	4.3	3.6	3.1	20.0
22.0	3.3	3.1	2.9	4.1	3.5	3.0	3.9	3.4	3.0	4.3	3.6	3.1	4.2	3.5	3.0	4.3	3.6	3.1	4.3	3.5	3.0	4.1	3.5	3.0	22.0
24.0	3.1	2.9		3.8	3.3	2.9	3.7	3.2	2.9	4.0	3.4	3.0	4.0	3.4	2.9	4.1	3.5	3.0	4.0	3.4	2.9	3.9	3.3	2.9	24.0
26.0	3.0			3.6	3.2	2.9	3.5	3.1	2.8	3.8	3.3	2.9	3.8	3.2	2.9	3.9	3.3	2.9	3.8	3.3	2.9	3.7	3.2	2.8	26.0
28.0				3.5	3.1	2.8	3.4	3.0	2.7	3.6	3.2	2.8	3.6	3.1	2.8	3.7	3.2	2.8	3.7	3.2	2.8	3.6	3.1	2.7	28.0
30.0				3.3	3.0		3.2	2.9		3.5	3.0	2.8	3.4	3.0	2.7	3.6	3.1	2.8	3.5	3.1	2.7	3.4	3.0	2.7	30.0
32.0				3.2	2.9		3.1	2.8		3.3	2.9	2.7	3.3	2.9	2.7	3.4	3.0	2.7	3.4	3.0	2.7	3.3	2.9	2.6	32.0
34.0				3.0	2.8		3.0	2.7		3.2	2.9		3.2	2.8		3.3	2.9	2.7	3.3	2.9	2.6	3.2	2.8	2.6	34.0
36.0				2.9	2.7		2.9	2.7		3.1	2.8		3.1	2.8		3.2	2.8		3.1	2.8		3.1	2.7		36.0
38.0				2.9			2.8			3.0	2.7		3.0	2.7		3.1	2.8		3.0	2.7		3.0	2.7		38.0
40.0										2.9			2.9			3.0	2.7		2.9	2.7		2.9	2.6		40.0
44.0																2.4			2.8			2.6			44.0
48.0																									48.0
52.0																									52.0
56.0																									56.0
60.0																									60.0
64.0																									64.0
68.0																									68.0
72.0																									72.0
1	0	0	0	46	46	46	0	0	0	92	92	92	46	46	46	92	92	92	46	46	46	0	0	0	1
2	0	0	0	46	46	46	0	0	0	46	46	46	46	46	46	46	46	46	46	46	46	0	0	0	2
3	0	0	0	46	46	46	0	0	0	46	46	46	46	46	46	46	46	46	46	46	46	46	46	46	3
4	0	0	0	0	0	0	46	46	46	0	0	0	46	46	46	46	46	46	46	46	46	92	92	92	4
5	0	0	0	0	0	0	92	92	92	0	0	0	0	0	0	0	0	0	46	46	46	92	92	92	5
ID	1	1	1	66	66	66	17	17	17	67	67	67	54	54	54	55	55	55	49	49	49	19	19	19	ID
[DEG]	0~81	41~85	56~85	25~81	36~85	59~85	26~81	37~85	60~85	31~81	40~85	57~85	31~81	40~85	57~85	31~81	43~85	58~85	31~81	44~85	58~85	32~81	44~85	58~85	[DEG]
	1	1	1	1	1	1	1	1	1	1	1	1	1	1	1	1	1	1	1	1	1	1	1	1	
	8.7t	8.7t	8.7t	8.7t	8.7t	8.7t	8.7t	8.7t	8.7t	8.7t	8.7t	8.7t	8.7t	8.7t	8.7t	8.7t	8.7t	8.7t	8.7t	8.7t	8.7t	8.7t	8.7t	8.7t	

m	43.0	43.0	43.0	43.0	43.0	43.0	47.4	47.4	47.4	47.4	47.4	47.4	51.7	51.7	51.7	51.7	51.7	51.7	56.0	56.0	56.0	60.0	60.0	60.0	m
°	5	20	40	5	20	40	5	20	40	5	20	40	5	20	40	5	20	40	5	20	40	5	20	40	°
3.0																									3.0
3.5																									3.5
4.0																									4.0
4.5																									4.5
5.0																									5.0
6.0																									6.0
7.0																									7.0
8.0																									8.0
9.0																									9.0
10.0																									10.0
11.0																									11.0
12.0	5.5			4.1																					12.0
14.0	5.4	4.3		4.1	4.1		4.7	4.2		4.3	4.2		4.1			3.9									14.0
16.0	5.1	4.1		4.1	3.9		4.7	4.1		4.3	4.0		4.1	4.0		3.9	3.9		3.9	3.8		3.6	3.6		16.0
18.0	4.8	3.9	3.2	4.1	3.8		4.7	3.9		4.3	3.8		4.1	3.8		3.9	3.7		3.9	3.7		3.6	3.6		18.0
20.0	4.6	3.8	3.1	4.1	3.6	3.1	4.6	3.7	3.1	4.3	3.7	3.1	4.1	3.7	3.1	3.9	3.6	3.0	3.9	3.6		3.6	3.5		20.0
22.0	4.4	3.6	3.0	4.1	3.5	3.0	4.4	3.6	3.0	4.3	3.5	3.0	4.1	3.5	3.0	3.9	3.5	2.9	3.9	3.5	2.9	3.6	3.4	2.9	22.0
24.0	4.2	3.5	3.0	4.0	3.3	2.9	4.2	3.5	2.9	4.1	3.4	2.9	4.1	3.4	2.9	3.9	3.4	2.9	3.9	3.3	2.9	3.6	3.3	2.8	24.0
26.0	4.0	3.3	2.9	3.8	3.2	2.8	4.0	3.3	2.9	3.9	3.3	2.8	4.0	3.3	2.8	3.8	3.2	2.8	3.8	3.2	2.8	3.6	3.2	2.8	26.0
28.0	3.8	3.2	2.8	3.7	3.1	2.7	3.9	3.2	2.8	3.8	3.2	2.8	3.8	3.2	2.8	3.7	3.1	2.7	3.7	3.1	2.7	3.6	3.1	2.7	28.0
30.0	3.7	3.1	2.8	3.5	3.0	2.7	3.7	3.1	2.7	3.6	3.1	2.7	3.7	3.1	2.7	3.6	3.1	2.7	3.6	3.1	2.7	3.5	3.0	2.6	30.0
32.0	3.5	3.0	2.7	3.4	2.9	2.6	3.6	3.0	2.7	3.5	3.0	2.7	3.5	3.0	2.7	3.5	3.0	2.6	3.5	3.0	2.6	3.4	2.9	2.6	32.0
34.0	3.4	2.9	2.6	3.3	2.9	2.6	3.5	3.0	2.6	3.4	2.9	2.6	3.4	2.9	2.6	3.4	2.9	2.6	3.4	2.9	2.6	3.3	2.9	2.5	34.0
36.0	3.3	2.9	2.6	3.2	2.8	2.5	3.3	2.9	2.6	3.3	2.8	2.6	3.3	2.9	2.6	3.3	2.8	2.5	3.3	2.8	2.5	3.2	2.8	2.5	36.0
38.0	3.2	2.8	2.6	3.1	2.7	2.5	3.2	2.8	2.5	3.2	2.8	2.5	3.2	2.8	2.5	3.2	2.7	2.5	3.2	2.8	2.5	3.2	2.7	2.5	38.0
40.0	3.1	2.7		3.0	2.6		3.1	2.7	2.5	3.1	2.7	2.5	3.1	2.7	2.5	3.1	2.7	2.4	3.1	2.7	2.4	3.0	2.7	2.4	40.0
44.0	2.4	2.6		2.8	2.5		2.3	2.6		2.8	2.6		2.4	2.6	2.4	2.9	2.6	2.4	2.6	2.6	2.4	2.5	2.5	2.3	44.0
48.0	1.6	1.9		2.7	2.5		1.6	1.9		2.1	2.4		1.7	2.0		2.2	2.5		1.8	2.2		1.8	2.1	2.3	48.0
52.0				2.2				1.2		1.5	1.7			1.3		1.6	1.9		1.2	1.5		1.2	1.5		52.0
56.0																1.1	1.3								56.0
60.0																									60.0
64.0																									64.0
68.0																									68.0
72.0																									72.0
1	92	92	92	0	0	0	92	92	92	46	46	46	92	92	92	46	46	46	92	92	92	100	100	100	1
2	92	92	92	46	46	46	92	92	92	92	92	92	92	92	92	92	92	92	92	92	92	100	100	100	2
3	46	46	46	92	92	92	92	92	92	92	92	92	92	92	92	92	92	92	92	92	92	100	100	100	3
4	46	46	46	92	92	92	46	46	46	92	92	92	92	92	92	92	92	92	92	92	92	100	100	100	4
5	46	46	46	92	92	92	46	46	46	46	46	46	46	46	46	92	92	92	92	92	92	100	100	100	5
ID	42	42	42	21	21	21	38	38	38	31	31	31	32	32	32	23	23	23	24	24	24	16	16	16	ID
[DEG]	39~81	42~85	60~85	32~81	43~85	60~85	44~81	41~85	61~85	38~81	41~85	61~85	49~81	47~85	60~85	38~81	41~85	60~85	48~81	51~85	63~85	52~81	55~85	62~85	[DEG]
	1	1	1	1	1	1	1	1	1	1	1	1	1	1	1	1	1	1	1	1	1	1	1	1	
	8.7t	8.7t	8.7t	8.7t	8.7t	8.7t	8.7t	8.7t	8.7t	8.7t	8.7t	8.7t	8.7t	8.7t	8.7t	8.7t	8.7t	8.7t	8.7t	8.7t	8.7t	8.7t	8.7t	8.7t	

油圧チルトジブ

HLJ	1.0m + 24.0m	25.4 t	8.0m x 7.5m	360 °	JPN

m	12.8	12.8	12.8	25.8	25.8	25.8	25.8	25.8	25.8	30.1	30.1	30.1	30.1	30.1	30.1	34.4	34.4	34.4	34.4	34.4	34.4	34.4	34.4	34.4	m
°	5	20	40	5	20	40	5	20	40	5	20	40	5	20	40	5	20	40	5	20	40	5	20	40	°
3.0																									3.0
3.5																									3.5
4.0																									4.0
4.5																									4.5
5.0																									5.0
6.0																									6.0
7.0																									7.0
8.0	5.1																								8.0
9.0	5.1																								9.0
10.0	5.1			4.9			3.7																		10.0
11.0	5.1			4.9			3.7			4.6			4.3												11.0
12.0	5.1	4.5		4.9			3.7			4.6			4.3			4.2			4.0			3.2			12.0
14.0	4.8	4.0		4.9	4.4		3.7	3.7		4.6	4.4		4.3	4.3		4.2			4.0			3.2			14.0
16.0	4.3	3.6		4.9	4.1		3.7	3.7		4.6	4.1		4.3	4.1		4.2	4.1		4.0	4.0		3.2	3.2		16.0
18.0	3.8	3.3		4.6	3.8		3.7	3.7		4.6	3.8		4.3	3.9		4.2	3.9		4.0	3.8		3.2	3.2		18.0
20.0	3.4	3.0	2.6	4.3	3.5		3.7	3.4		4.4	3.6		4.3	3.6		4.2	3.6		4.0	3.7		3.2	3.2		20.0
22.0	3.1	2.7	2.4	4.1	3.2	2.6	3.7	3.2	2.5	4.2	3.3	2.6	4.2	3.4	2.6	4.2	3.4	2.6	4.0	3.4		3.2	3.2		22.0
24.0	2.8	2.5	2.2	3.7	3.0	2.4	3.7	3.0	2.4	4.0	3.1	2.5	4.0	3.1	2.5	4.0	3.2	2.5	3.9	3.2	2.5	3.2	3.2	2.5	24.0
26.0	2.6	2.3	2.1	3.5	2.8	2.3	3.4	2.8	2.3	3.7	2.9	2.4	3.7	3.0	2.4	3.9	3.0	2.4	3.8	3.1	2.4	3.2	3.0	2.4	26.0
28.0	2.4	2.2	2.0	3.2	2.7	2.2	3.2	2.6	2.2	3.4	2.8	2.3	3.4	2.8	2.3	3.6	2.9	2.3	3.6	2.9	2.3	3.2	2.8	2.3	28.0
30.0	2.2	2.0		3.0	2.5	2.1	2.9	2.5	2.1	3.2	2.6	2.2	3.2	2.6	2.2	3.4	2.7	2.2	3.4	2.7	2.2	3.2	2.7	2.2	30.0
32.0	2.0	1.9		2.8	2.4	2.0	2.8	2.4	2.0	3.0	2.5	2.1	3.0	2.5	2.1	3.2	2.6	2.1	3.2	2.6	2.1	3.1	2.6	2.1	32.0
34.0				2.6	2.3	2.0	2.6	2.3	2.0	2.8	2.4	2.0	2.8	2.4	2.0	3.0	2.5	2.1	3.0	2.5	2.1	3.0	2.5	2.1	34.0
36.0				2.5	2.2	1.9	2.4	2.1	1.9	2.6	2.3	2.0	2.7	2.3	2.0	2.8	2.4	2.0	2.8	2.4	2.0	2.8	2.4	2.0	36.0
38.0				2.3	2.1		2.3	2.1		2.5	2.2	1.9	2.5	2.2	1.9	2.7	2.3	1.9	2.7	2.3	1.9	2.6	2.3	1.9	38.0
40.0				2.2	2.0		2.2	2.0		2.4	2.1		2.4	2.1		2.5	2.2	1.9	2.5	2.2	1.9	2.5	2.2	1.9	40.0
44.0				2.0			2.0			2.1	1.9		2.1	1.9		2.3	2.0		2.3	2.0		2.3	2.0		44.0
48.0										2.0			2.0			2.0	1.9		2.1	1.9		2.0	1.9		48.0
52.0																1.4			1.9			1.8			52.0
56.0																									56.0
60.0																									60.0
64.0																									64.0
68.0																									68.0
72.0																									72.0
% 1	0	0	0	46	46	46	0	0	0	92	92	92	46	46	46	92	92	92	46	46	46	0	0	0	1
% 2	0	0	0	46	46	46	0	0	0	46	46	46	46	46	46	46	46	46	46	46	46	0	0	0	2
% 3	0	0	0	46	46	46	0	0	0	46	46	46	46	46	46	46	46	46	46	46	46	46	46	46	3
% 4	0	0	0	0	0	0	46	46	46	0	0	0	46	46	46	46	46	46	46	46	46	92	92	92	4
% 5	0	0	0	0	0	0	92	92	92	0	0	0	0	0	0	0	0	0	46	46	46	92	92	92	5
ID	1	1	1	66	66	66	17	17	17	67	67	67	54	54	54	55	55	55	49	49	49	19	19	19	ID
[DEG]	0~81	37~85	59~85	28~81	44~85	57~85	29~81	45~85	58~85	29~81	43~85	59~85	29~81	43~85	59~85	28~81	42~85	59~85	29~81	42~85	59~85	30~81	43~85	60~85	[DEG]
	1	1	1	1	1	1	1	1	1	1	1	1	1	1	1	1	1	1	1	1	1	1	1	1	
	8.7t	8.7t	8.7t	8.7t	8.7t	8.7t	8.7t	8.7t	8.7t	8.7t	8.7t	8.7t	8.7t	8.7t	8.7t	8.7t	8.7t	8.7t	8.7t	8.7t	8.7t	8.7t	8.7t	8.7t	

m	43.0	43.0	43.0	43.0	43.0	43.0	47.4	47.4	47.4	47.4	47.4	47.4	51.7	51.7	51.7	51.7	51.7	51.7	56.0	56.0	56.0	60.0	60.0	60.0	m
°	5	20	40	5	20	40	5	20	40	5	20	40	5	20	40	5	20	40	5	20	40	5	20	40	°
3.0																									3.0
3.5																									3.5
4.0																									4.0
4.5																									4.5
5.0																									5.0
6.0																									6.0
7.0																									7.0
8.0																									8.0
9.0																									9.0
10.0																									10.0
11.0																									11.0
12.0																									12.0
14.0	3.8			2.9																					14.0
16.0	3.8			2.9			3.3			3.1			3.0			2.9									16.0
18.0	3.8	3.8		2.9	2.9		3.3	3.3		3.1	3.1		3.0	3.0		2.9			2.9						18.0
20.0	3.8	3.6		2.9	2.9		3.3	3.3		3.1	3.1		3.0	3.0		2.9	2.9		2.9	2.9		2.4			20.0
22.0	3.8	3.5		2.9	2.9		3.3	3.3		3.1	3.1		3.0	3.0		2.9	2.9		2.9	2.9		2.4	2.4		22.0
24.0	3.8	3.3	2.5	2.9	2.9		3.3	3.3		3.1	3.1		3.0	3.0		2.9	2.9		2.9	2.9		2.4	2.4		24.0
26.0	3.8	3.2	2.4	2.9	2.9	2.4	3.3	3.2	2.4	3.1	3.1	2.4	3.0	3.0		2.9	2.9		2.9	2.9		2.4	2.4		26.0
28.0	3.7	3.0	2.3	2.9	2.9	2.3	3.3	3.0	2.3	3.1	3.0	2.3	3.0	3.0	2.3	2.9	2.9	2.3	2.9	2.9	2.3	2.4	2.4		28.0
30.0	3.5	2.9	2.3	2.9	2.8	2.2	3.3	2.9	2.3	3.1	2.9	2.3	3.0	2.9	2.3	2.9	2.9	2.3	2.9	2.9	2.3	2.4	2.4	2.0	30.0
32.0	3.4	2.8	2.2	2.9	2.7	2.2	3.3	2.8	2.2	3.1	2.8	2.2	3.0	2.8	2.2	2.9	2.8	2.2	2.9	2.8	2.2	2.4	2.4	2.0	32.0
34.0	3.3	2.6	2.1	2.9	2.6	2.1	3.3	2.7	2.1	3.1	2.7	2.1	3.0	2.7	2.2	2.9	2.7	2.2	2.9	2.8	2.2	2.4	2.4	1.9	34.0
36.0	3.1	2.5	2.1	2.9	2.5	2.1	3.2	2.6	2.1	3.1	2.6	2.1	3.0	2.6	2.1	2.9	2.6	2.1	2.9	2.7	2.1	2.4	2.4	1.9	36.0
38.0	3.0	2.4	2.0	2.9	2.4	2.0	3.1	2.5	2.0	3.1	2.5	2.0	3.0	2.5	2.0	2.9	2.5	2.1	2.9	2.6	2.1	2.4	2.3	1.9	38.0
40.0	2.8	2.3	2.0	2.8	2.3	2.0	3.0	2.4	2.0	2.9	2.4	2.0	3.0	2.4	2.0	2.9	2.4	2.0	2.9	2.5	2.0	2.4	2.3	1.8	40.0
44.0	2.6	2.2	1.9	2.6	2.2	1.9	2.6	2.2	1.9	2.7	2.2	1.9	2.6	2.3	1.9	2.8	2.3	1.9	2.7	2.3	1.9	2.2	2.1	1.7	44.0
48.0	1.9	2.1		2.3	2.0		1.9	2.1	1.8	2.3	2.1	1.8	1.9	2.2	1.9	2.4	2.2	1.9	2.0	2.2	1.9	1.9	1.9	1.7	48.0
52.0	1.3	1.7		2.1	1.9		1.2	1.6		1.7	2.0		1.3	1.7		1.8	2.0		1.4	1.8	1.8	1.3	1.7	1.6	52.0
56.0				1.9	1.8					1.2	1.4					1.2	1.6			1.2			1.1	1.5	56.0
60.0				1.4																					60.0
64.0																									64.0
68.0																									68.0
72.0																									72.0
% 1	92	92	92	0	0	0	92	92	92	46	46	46	92	92	92	46	46	46	92	92	92	100	100	100	1
% 2	92	92	92	46	46	46	92	92	92	92	92	92	92	92	92	92	92	92	92	92	92	100	100	100	2
% 3	46	46	46	92	92	92	92	92	92	92	92	92	92	92	92	92	92	92	92	92	92	100	100	100	3
% 4	46	46	46	92	92	92	46	46	46	92	92	92	92	92	92	92	92	92	92	92	92	100	100	100	4
% 5	46	46	46	92	92	92	46	46	46	46	46	46	46	46	46	92	92	92	92	92	92	100	100	100	5
ID	42	42	42	21	21	21	38	38	38	31	31	31	32	32	32	23	23	23	24	24	24	16	16	16	ID
[DEG]	43~81	47~85	61~85	30~81	42~85	62~85	47~81	52~85	60~85	43~81	46~85	60~85	52~81	56~85	64~85	47~81	52~85	64~85	55~81	55~85	62~85	58~81	58~85	61~85	[DEG]
	1	1	1	1	1	1	1	1	1	1	1	1	1	1	1	1	1	1	1	1	1	1	1	1	
	8.7t	8.7t	8.7t	8.7t	8.7t	8.7t	8.7t	8.7t	8.7t	8.7t	8.7t	8.7t	8.7t	8.7t	8.7t	8.7t	8.7t	8.7t	8.7t	8.7t	8.7t	8.7t	8.7t	8.7t	

HLJ	1.0m + 31.0m	25.4 t	8.0m x 7.5m	360 °	JPN

m	12.8	12.8	12.8	25.8	25.8	25.8	25.8	25.8	25.8	30.1	30.1	30.1	30.1	30.1	30.1	34.4	34.4	34.4	34.4	34.4	34.4	34.4	34.4	34.4	m
°	5	20	40	5	20	40	5	20	40	5	20	40	5	20	40	5	20	40	5	20	40	5	20	40	°
3.0																									3.0
3.5																									3.5
4.0																									4.0
4.5																									4.5
5.0																									5.0
6.0																									6.0
7.0																									7.0
8.0																									8.0
9.0																									9.0
10.0	3.5																								10.0
11.0	3.5																								11.0
12.0	3.5			3.3			2.6																		12.0
14.0	3.5			3.3			2.6			3.1			2.9			2.9			2.8			2.3			14.0
16.0	3.5	3.0		3.3			2.6			3.1			2.9			2.9			2.8			2.3			16.0
18.0	3.2	2.7		3.3	3.0		2.6	2.6		3.1	3.0		2.9	2.9		2.9			2.8			2.3			18.0
20.0	2.9	2.5		3.3	2.7		2.6	2.6		3.1	2.8		2.9	2.8		2.9	2.8		2.8	2.8		2.3	2.3		20.0
22.0	2.6	2.2		3.3	2.5		2.6	2.5		3.1	2.6		2.9	2.6		2.9	2.6		2.8	2.6		2.3	2.3		22.0
24.0	2.3	2.0	1.7	3.0	2.3		2.6	2.3		3.1	2.4		2.9	2.4		2.9	2.4		2.8	2.4		2.3	2.3		24.0
26.0	2.1	1.9	1.6	2.7	2.2	1.7	2.6	2.1		2.9	2.2		2.9	2.2		2.9	2.3		2.8	2.3		2.3	2.2		26.0
28.0	1.9	1.7	1.5	2.5	2.0	1.6	2.5	2.0	1.6	2.7	2.1	1.6	2.7	2.1	1.6	2.8	2.2	1.6	2.8	2.2		2.3	2.1		28.0
30.0	1.7	1.6	1.4	2.3	1.9	1.5	2.3	1.9	1.5	2.5	2.0	1.5	2.5	2.0	1.5	2.6	2.0	1.6	2.6	2.0	1.6	2.3	2.0	1.5	30.0
32.0	1.6	1.5	1.3	2.2	1.8	1.4	2.1	1.8	1.4	2.3	1.9	1.5	2.3	1.9	1.5	2.4	1.9	1.5	2.4	1.9	1.5	2.3	1.9	1.5	32.0
34.0	1.5	1.4	1.2	2.0	1.7	1.4	2.0	1.7	1.4	2.1	1.7	1.4	2.2	1.8	1.4	2.3	1.8	1.4	2.3	1.8	1.4	2.2	1.8	1.4	34.0
36.0	1.4	1.3	1.2	1.9	1.6	1.3	1.8	1.6	1.3	2.0	1.7	1.3	2.0	1.7	1.3	2.1	1.7	1.4	2.1	1.7	1.4	2.1	1.7	1.4	36.0
38.0	1.3	1.2		1.7	1.5	1.3	1.7	1.5	1.3	1.9	1.6	1.3	1.9	1.6	1.3	2.0	1.6	1.3	2.0	1.6	1.3	2.0	1.6	1.3	38.0
40.0	1.2			1.6	1.4	1.2	1.6	1.4	1.2	1.8	1.5	1.2	1.8	1.5	1.2	1.9	1.6	1.3	1.9	1.6	1.3	1.9	1.5	1.3	40.0
44.0				1.4	1.3		1.4	1.3		1.6	1.3	1.2	1.6	1.3	1.2	1.7	1.4	1.2	1.7	1.4	1.2	1.6	1.4	1.2	44.0
48.0				1.3	1.2		1.3	1.2		1.4	1.2		1.4	1.2		1.5	1.3	1.1	1.5	1.3	1.1	1.5	1.3	1.1	48.0
52.0				1.2			1.1			1.3	1.1		1.3	1.1		1.4	1.2		1.3	1.2		1.3	1.2		52.0
56.0										1.1			1.1			1.1	1.1		1.2	1.1		1.2	1.1		56.0
60.0																			1.1			1.1			60.0
64.0																									64.0
68.0																									68.0
72.0																									72.0
% 1	0	0	0	46	46	46	0	0	0	92	92	92	46	46	46	92	92	92	46	46	46	0	0	0	1
% 2	0	0	0	46	46	46	0	0	0	46	46	46	46	46	46	46	46	46	46	46	46	0	0	0	2
% 3	0	0	0	46	46	46	0	0	0	46	46	46	46	46	46	46	46	46	46	46	46	46	46	46	3
% 4	0	0	0	0	0	0	46	46	46	0	0	0	46	46	46	46	46	46	46	46	46	92	92	92	4
% 5	0	0	0	0	0	0	92	92	92	0	0	0	0	0	0	0	0	0	46	46	46	92	92	92	5
ID	1	1	1	66	66	66	17	17	17	67	67	67	54	54	54	55	55	55	49	49	49	19	19	19	ID
[DEG]	0~81	40~85	56~85	25~81	41~85	63~85	26~81	42~85	64~85	26~81	40~85	60~85	26~81	40~85	60~85	35~81	39~85	58~85	26~81	40~85	58~85	27~81	41~85	59~85	[DEG]
	1	1	1	1	1	1	1	1	1	1	1	1	1	1	1	1	1	1	1	1	1	1	1	1	
	8.7t	8.7t	8.7t	8.7t	8.7t	8.7t	8.7t	8.7t	8.7t	8.7t	8.7t	8.7t	8.7t	8.7t	8.7t	8.7t	8.7t	8.7t	8.7t	8.7t	8.7t	8.7t	8.7t	8.7t	

m	43.0	43.0	43.0	43.0	43.0	43.0	47.4	47.4	47.4	47.4	47.4	47.4	51.7	51.7	51.7	51.7	51.7	51.7	56.0	56.0	56.0	60.0	60.0	60.0	m
°	5	20	40	5	20	40	5	20	40	5	20	40	5	20	40	5	20	40	5	20	40	5	20	40	°
3.0																									3.0
3.5																									3.5
4.0																									4.0
4.5																									4.5
5.0																									5.0
6.0																									6.0
7.0																									7.0
8.0																									8.0
9.0																									9.0
10.0																									10.0
11.0																									11.0
12.0																									12.0
14.0																									14.0
16.0	2.7			2.1																					16.0
18.0	2.7			2.1			2.4			2.2			2.2			2.1									18.0
20.0	2.7			2.1			2.4			2.2			2.2			2.1									20.0
22.0	2.7	2.6		2.1	2.1		2.4	2.4		2.2	2.2		2.2			2.1			2.1			1.6			22.0
24.0	2.7	2.5		2.1	2.1		2.4	2.4		2.2	2.2		2.2	2.2		2.1	2.1		2.1	2.1		1.6			24.0
26.0	2.7	2.3		2.1	2.1		2.4	2.3		2.2	2.2		2.2	2.2		2.1	2.1		2.1	2.1		1.6	1.6		26.0
28.0	2.7	2.2		2.1	2.1		2.4	2.2		2.2	2.2		2.2	2.2		2.1	2.1		2.1	2.1		1.6	1.6		28.0
30.0	2.7	2.1	1.6	2.1	2.1		2.4	2.1		2.2	2.1		2.2	2.1		2.1	2.1		2.1	2.1		1.6	1.6		30.0
32.0	2.6	2.0	1.5	2.1	2.0	1.5	2.4	2.0	1.5	2.2	2.0	1.5	2.2	2.0		2.1	2.0		2.1	2.0		1.6	1.6		32.0
34.0	2.5	1.9	1.4	2.1	1.9	1.4	2.4	1.9	1.5	2.2	1.9	1.4	2.2	1.9	1.4	2.1	1.9	1.4	2.1	1.9	1.4	1.6	1.6		34.0
36.0	2.3	1.8	1.4	2.1	1.8	1.4	2.4	1.8	1.4	2.2	1.8	1.4	2.2	1.9	1.4	2.1	1.8	1.4	2.1	1.9	1.4	1.6	1.6	1.2	36.0
38.0	2.2	1.7	1.3	2.1	1.7	1.3	2.3	1.8	1.4	2.2	1.8	1.4	2.2	1.8	1.4	2.1	1.8	1.4	2.1	1.8	1.4	1.6	1.6	1.2	38.0
40.0	2.1	1.7	1.3	2.0	1.6	1.3	2.2	1.7	1.3	2.2	1.7	1.3	2.2	1.7	1.3	2.1	1.7	1.3	2.1	1.7	1.3	1.6	1.6	1.2	40.0
44.0	1.9	1.5	1.2	1.8	1.5	1.2	1.9	1.5	1.2	1.9	1.5	1.2	2.0	1.6	1.2	2.0	1.6	1.2	2.0	1.6	1.2	1.6	1.5	1.1	44.0
48.0	1.7	1.4	1.2	1.6	1.4	1.2	1.8	1.4	1.2	1.7	1.4	1.2	1.8	1.5	1.2	1.8	1.5	1.2	1.8	1.5	1.2	1.6	1.4	1.1	48.0
52.0	1.5	1.3	1.1	1.5	1.3	1.1	1.4	1.3	1.1	1.6	1.3	1.1	1.4	1.4	1.1	1.6	1.4	1.1	1.5	1.4	1.1	1.4	1.3	1.0	52.0
56.0		1.2		1.3	1.2			1.2		1.3	1.2			1.3	1.1	1.3	1.3	1.1		1.3	1.1		1.2	1.0	56.0
60.0				1.2	1.1						1.2						1.2				1.1			0.9	60.0
64.0				1.1	1.1																				64.0
68.0																									68.0
72.0																									72.0
% 1	92	92	92	0	0	0	92	92	92	46	46	46	92	92	92	46	46	46	92	92	92	100	100	100	1
% 2	92	92	92	46	46	46	92	92	92	92	92	92	92	92	92	92	92	92	92	92	92	100	100	100	2
% 3	46	46	46	92	92	92	92	92	92	92	92	92	92	92	92	92	92	92	92	92	92	100	100	100	3
% 4	46	46	46	92	92	92	46	46	46	92	92	92	92	92	92	92	92	92	92	92	92	100	100	100	4
% 5	46	46	46	92	92	92	46	46	46	46	46	46	46	46	46	92	92	92	92	92	92	100	100	100	5
ID	42	42	42	21	21	21	38	38	38	31	31	31	32	32	32	23	23	23	24	24	24	16	16	16	ID
[DEG]	51~81	51~85	60~85	37~81	40~85	61~85	55~81	55~85	64~85	51~81	51~85	64~85	58~81	59~85	63~85	55~81	55~85	63~85	61~81	62~85	62~85	63~81	65~85	64~85	[DEG]
	1	1	1	1	1	1	1	1	1	1	1	1	1	1	1	1	1	1	1	1	1	1	1	1	
	8.7t	8.7t	8.7t	8.7t	8.7t	8.7t	8.7t	8.7t	8.7t	8.7t	8.7t	8.7t	8.7t	8.7t	8.7t	8.7t	8.7t	8.7t	8.7t	8.7t	8.7t	8.7t	8.7t	8.7t	

油圧チルトジブ

HLJ	1.0m + 2.8m	25.4 t	8.0m x 6.2m	360 °	JPN

m	12.8	12.8	12.8	25.8	25.8	25.8	25.8	25.8	25.8	30.1	30.1	30.1	30.1	30.1	30.1	34.4	34.4	34.4	34.4	34.4	34.4	34.4	34.4	34.4	m
°	5	20	40	5	20	40	5	20	40	5	20	40	5	20	40	5	20	40	5	20	40	5	20	40	°
3.0		31.6	25.3																						3.0
3.5	38.1	30.3	24.6		31.4			25.0																	3.5
4.0	36.1	29.1	23.9		30.6	23.4		24.2						31.2											4.0
4.5	34.3	28.0	23.3		29.8	23.1		23.3	21.5		30.2			30.4											4.5
5.0	32.7	27.0	22.8		29.0	22.7		22.4	20.6		29.5	22.8		29.8	22.9		29.9			24.9			16.9		5.0
6.0	29.9	25.3	21.8		27.7	22.0		20.5	19.0		28.3	22.2		28.5	22.3		28.9	22.5		24.9	23.0		16.9	16.9	6.0
7.0	27.7	23.8	20.9		26.5	21.3		18.9	17.7		27.1	21.6		27.4	21.7		27.9	22.0		24.9	22.4		16.9	16.9	7.0
8.0	25.7	22.6	20.2	32.0	25.4	20.8	18.6	17.5	16.5		26.1	21.1		26.3	21.2		26.9	21.5		24.3	21.9		16.9	16.7	8.0
9.0	24.1	21.5		30.3	24.4	20.2	17.3	16.3	15.5	32.0	25.2	20.6	32.2	25.4	20.7		26.0	21.0		23.1	20.9		16.2	15.9	9.0
10.0	22.7	20.6		28.7	23.5	19.7	16.1	15.3	14.6	30.1	24.3	20.2	30.7	24.5	20.2		25.2	20.6	24.4	22.1	20.1		15.3	14.9	10.0
11.0	21.5	19.9		26.2	22.7	19.3	15.1	14.4	13.7	25.6	23.6	19.8	26.8	23.7	19.8	26.1	24.4	20.2	23.2	21.1	19.3	14.8	14.4	14.0	11.0
12.0	20.6	19.3		22.6	21.9	18.9	14.2	13.6	13.0	22.0	22.4	19.4	23.1	23.0	19.4	22.5	22.9	19.8	22.1	20.2	18.6	13.9	13.5	13.2	12.0
14.0				17.3	17.5	17.8	12.6	12.2	11.8	16.7	17.0	17.3	17.7	18.0	18.3	17.2	17.5	17.8	18.4	18.7	17.4	12.3	12.1	11.8	14.0
16.0				13.6	13.8	14.0	11.4	11.1	10.8	13.1	13.3	13.6	14.0	14.3	14.5	13.5	13.8	14.0	14.7	14.9	15.1	11.1	10.9	10.6	16.0
18.0				10.9	11.1		10.3	10.0		10.4	10.6	10.8	11.4	11.5	11.7	10.9	11.1	11.3	12.0	12.2	12.3	9.9	9.8	9.7	18.0
20.0				8.9	9.0		9.3	9.2		8.4	8.5		9.3	9.4		8.8	9.0	9.1	9.9	10.1	10.2	8.9	8.8	8.8	20.0
22.0				7.3	7.4		8.5	8.4		6.8	6.9		7.7	7.8		7.2	7.3		8.3	8.4		8.1	8.0		22.0
24.0				6.0			7.9			5.5	5.6		6.4	6.5		5.9	6.0		7.0	7.1		7.4	7.3		24.0
26.0										4.4	4.5		5.3	5.4		4.8	4.9		5.9	6.0		6.8	6.7		26.0
28.0										3.5			4.4			4.0	4.0		5.0	5.0		6.2	6.2		28.0
30.0																3.2			4.2			5.5			30.0
32.0																2.5			3.5			4.8			32.0
34.0																									34.0
36.0																									36.0
38.0																									38.0
40.0																									40.0
44.0																									44.0
48.0																									48.0
52.0																									52.0
56.0																									56.0
60.0																									60.0
64.0																									64.0
68.0																									68.0
72.0																									72.0
1	0	0	0	46	46	46	0	0	0	92	92	92	46	46	46	92	92	92	46	46	46	0	0	0	1
2	0	0	0	46	46	46	0	0	0	46	46	46	46	46	46	46	46	46	46	46	46	0	0	0	2
3	0	0	0	46	46	46	0	0	0	46	46	46	46	46	46	46	46	46	46	46	46	46	46	46	3
4	0	0	0	0	0	0	46	46	46	0	0	0	46	46	46	46	46	46	46	46	46	92	92	92	4
5	0	0	0	0	0	0	92	92	92	0	0	0	0	0	0	0	0	0	46	46	46	92	92	92	5
ID	1	1	1	66	66	66	17	17	17	67	67	67	54	54	54	55	55	55	49	49	49	19	19	19	ID
[DEG]	0~76	34~85	58~85	28~76	37~85	56~85	29~76	38~85	57~85	28~76	36~85	58~85	28~76	36~85	58~85	28~76	40~85	59~85	28~76	41~85	59~85	29~76	41~85	59~85	[DEG]
	5	5	5	4	4	4	3	3	3	4	4	4	4	4	4	4	4	4	3	3	3	2	2	2	
	60t	60t	60t	60t	60t	60t	26t	26t	26t	60t	60t	60t	60t	60t	60t	60t	60t	60t	26t	26t	26t	26t	26t	26t	

m	43.0	43.0	43.0	43.0	43.0	43.0	47.4	47.4	47.4	47.4	47.4	47.4	51.7	51.7	51.7	51.7	51.7	51.7	56.0	56.0	56.0	60.0	60.0	60.0	m
°	5	20	40	5	20	40	5	20	40	5	20	40	5	20	40	5	20	40	5	20	40	5	20	40	°
3.0																									3.0
3.5																									3.5
4.0																									4.0
4.5																									4.5
5.0																									5.0
6.0																									6.0
7.0		17.1	17.1		12.1	12.1		13.9			12.4														7.0
8.0		17.1	17.1		12.1	12.1		13.9	13.9		12.4	12.4		11.1			9.8								8.0
9.0		17.1	17.1		12.1	12.1		13.9	13.9		12.4	12.4		11.1	11.1		9.8	9.8		9.0	9.0		7.8		9.0
10.0		17.1	17.1		12.1	12.1		13.9	13.9		12.4	12.4		11.1	11.1		9.8	9.8		9.0	9.0		7.8	7.8	10.0
11.0		17.1	17.1		12.1	12.1		13.9	13.9		12.4	12.4		11.1	11.1		9.8	9.8		9.0	9.0		7.8	7.8	11.0
12.0		17.1	17.1		12.1	12.1		13.9	13.9		12.4	12.4		11.1	11.1		9.8	9.8		9.0	9.0		7.8	7.8	12.0
14.0	17.1	17.1	17.1	12.1	12.1	12.1		13.9	13.9		12.4	12.4		11.1	11.1		9.8	9.8		9.0	9.0		7.8	7.8	14.0
16.0	14.2	14.4	14.7	11.5	11.4	11.2	13.9	13.9	13.9	12.4	12.4	12.4	11.1	11.1	11.1	9.8	9.8	9.8		9.0	9.0		7.8	7.8	16.0
18.0	11.5	11.7	11.9	10.4	10.3	10.2	11.6	11.8	12.0	12.2	12.1	11.8	11.1	11.1	11.1	9.8	9.8	9.8	9.0	9.0	9.0		7.8	7.8	18.0
20.0	9.4	9.6	9.7	9.5	9.4	9.3	9.5	9.7	9.9	10.2	10.3	10.5	9.7	9.9	10.1	9.8	9.8	9.8	9.0	9.0	9.0	7.8	7.8	7.8	20.0
22.0	7.8	7.9	8.1	8.7	8.6	8.5	7.9	8.0	8.2	8.5	8.7	8.8	8.1	8.3	8.4	8.8	8.9	9.1	8.4	8.5	8.7	7.8	7.8	7.8	22.0
24.0	6.5	6.6	6.7	8.0	7.9	7.8	6.6	6.7	6.8	7.2	7.3	7.4	6.8	6.9	7.0	7.5	7.6	7.7	7.1	7.2	7.3	7.0	7.2	7.3	24.0
26.0	5.4	5.5	5.6	6.9	7.0	7.1	5.5	5.6	5.7	6.1	6.2	6.3	5.7	5.8	5.9	6.4	6.5	6.6	6.0	6.1	6.2	6.0	6.1	6.2	26.0
28.0	4.5	4.6		6.0	6.1		4.6	4.7	4.8	5.2	5.3	5.3	4.8	4.9	5.0	5.4	5.5	5.6	5.0	5.2	5.2	5.0	5.1	5.2	28.0
30.0	3.7	3.8		5.2	5.3		3.8	3.9		4.4	4.5		4.0	4.1	4.2	4.7	4.7	4.8	4.3	4.4	4.4	4.3	4.4	4.4	30.0
32.0	3.0	3.1		4.5	4.6		3.1	3.2		3.7	3.8		3.3	3.4		4.0	4.1		3.6	3.7	3.7	3.6	3.7	3.7	32.0
34.0	2.4	2.5		3.9	4.0		2.5	2.6		3.1	3.2		2.7	2.8		3.4	3.5		3.0	3.1		3.0	3.1	3.1	34.0
36.0	1.9	1.9		3.4	3.4		2.0	2.1		2.6	2.7		2.2	2.3		2.9	2.9		2.5	2.6		2.5	2.6		36.0
38.0	1.4			3.0			1.5	1.6		2.2	2.2		1.7	1.8		2.4	2.5		2.0	2.1		2.0	2.1		38.0
40.0				2.6						1.7	1.8		1.3	1.4		2.0	2.1		1.6	1.7		1.6	1.7		40.0
44.0																1.3									44.0
48.0																									48.0
52.0																									52.0
56.0																									56.0
60.0																									60.0
64.0																									64.0
68.0																									68.0
72.0																									72.0
1	92	92	92	0	0	0	92	92	92	46	46	46	92	92	92	46	46	46	92	92	92	100	100	100	1
2	92	92	92	46	46	46	92	92	92	92	92	92	92	92	92	92	92	92	92	92	92	100	100	100	2
3	46	46	46	92	92	92	92	92	92	92	92	92	92	92	92	92	92	92	92	92	92	100	100	100	3
4	46	46	46	92	92	92	46	46	46	92	92	92	92	92	92	92	92	92	92	92	92	100	100	100	4
5	46	46	46	92	92	92	46	46	46	46	46	46	46	46	46	92	92	92	92	92	92	100	100	100	5
ID	42	42	42	21	21	21	38	38	38	31	31	31	32	32	32	23	23	23	24	24	24	16	16	16	ID
[DEG]	33~76	39~85	57~85	28~76	39~85	58~85	41~76	42~85	59~85	37~76	38~85	59~85	44~76	44~85	59~85	37~76	44~85	60~85	49~76	49~85	60~85	53~76	53~85	61~85	[DEG]
	2	2	2	2	2	2	2	2	2	2	2	2	2	2	2	2	2	2	2	2	2	2	2	2	
	26t	26t	26t	26t	26t	26t	26t	26t	26t	26t	26t	26t	26t	26t	26t	26t	26t	26t	26t	26t	26t	26t	26t	26t	

HLJ	1.0m + 9.2m	25.4 t	8.0m x 6.2m	360 °	JPN

m	12.8	12.8	12.8	25.8	25.8	25.8	25.8	25.8	25.8	30.1	30.1	30.1	30.1	30.1	30.1	34.4	34.4	34.4	34.4	34.4	34.4	34.4	34.4	34.4	m
°	5	20	40	5	20	40	5	20	40	5	20	40	5	20	40	5	20	40	5	20	40	5	20	40	°
3.0																									3.0
3.5																									3.5
4.0	15.0																								4.0
4.5	15.0																								4.5
5.0	15.0	13.5																							5.0
6.0	15.0	12.4			14.4			14.1																	6.0
7.0	14.8	11.4	8.9	15.0	13.5		14.3	13.3			13.6			13.8			13.8			13.4					7.0
8.0	13.4	10.6	8.4	15.0	12.8		14.3	12.5		15.0	12.9		15.0	13.1			13.2			13.3			10.1		8.0
9.0	12.2	9.9	8.0	15.0	12.1	8.7	14.0	11.9	8.6	15.0	12.3	8.8	15.0	12.5	8.8	15.0	12.6		13.4	12.7			10.1		9.0
10.0	11.2	9.2	7.6	15.0	11.5	8.4	13.2	11.3	8.4	15.0	11.8	8.5	15.0	11.9	8.6	15.0	12.1	8.6	13.4	12.2	8.6	10.1	10.1		10.0
11.0	10.4	8.7	7.3	15.0	10.9	8.2	12.5	10.8	8.1	15.0	11.3	8.3	15.0	11.4	8.3	15.0	11.6	8.4	13.4	11.7	8.4	10.1	10.1	8.3	11.0
12.0	9.6	8.2	7.0	14.2	10.4	7.9	11.7	10.3	7.9	15.0	10.8	8.1	15.0	10.9	8.1	15.0	11.1	8.2	13.4	11.2	8.2	10.1	10.1	8.1	12.0
14.0	8.4	7.4	6.5	12.6	9.6	7.5	10.3	9.4	7.4	13.5	10.0	7.7	13.7	10.1	7.7	14.4	10.3	7.8	13.4	10.4	7.8	10.1	9.9	7.8	14.0
16.0	7.5	6.8		11.3	8.9	7.1	9.1	8.4	7.1	12.2	9.3	7.3	12.3	9.3	7.3	13.1	9.7	7.5	13.2	9.7	7.5	9.7	9.2	7.4	16.0
18.0	6.8			10.2	8.3	6.8	8.1	7.6	6.8	11.1	8.7	7.0	11.2	8.7	7.0	11.6	9.1	7.2	12.0	9.1	7.2	8.7	8.4	7.1	18.0
20.0				9.3	7.7	6.5	7.3	6.9	6.5	9.3	8.2	6.7	10.2	8.2	6.8	9.6	8.6	6.9	10.5	8.6	6.9	7.8	7.6	6.9	20.0
22.0				8.3	7.3	6.3	6.7	6.3	6.1	7.7	7.7	6.5	8.5	7.8	6.5	8.0	8.1	6.7	8.8	8.2	6.7	7.1	6.9	6.7	22.0
24.0				7.0	6.9		6.1	5.8		6.4	6.9	6.3	7.2	7.4	6.3	6.6	7.1	6.5	7.5	7.7	6.5	6.4	6.3	6.2	24.0
26.0				5.9	6.2		5.6	5.4		5.3	5.7		6.1	6.5		5.6	6.0	6.3	6.4	6.8	6.3	5.9	5.8	5.7	26.0
28.0				5.0	5.3		5.2	5.0		4.4	4.8		5.2	5.5		4.7	5.0		5.5	5.8		5.4	5.3		28.0
30.0				4.3			4.8			3.7	3.9		4.4	4.7		3.9	4.2		4.7	5.0		5.0	4.9		30.0
32.0										3.0	3.2		3.8	4.0		3.2	3.5		4.1	4.3		4.6	4.6		32.0
34.0										2.4			3.2			2.7	2.9		3.5	3.7		4.3	4.3		34.0
36.0																2.1			3.0			4.0			36.0
38.0																1.6			2.5			3.5			38.0
40.0																									40.0
44.0																									44.0
48.0																									48.0
52.0																									52.0
56.0																									56.0
60.0																									60.0
64.0																									64.0
68.0																									68.0
72.0																									72.0
1	0	0	0	46	46	46	0	0	0	92	92	92	46	46	46	92	92	92	46	46	46	0	0	0	1
2	0	0	0	46	46	46	0	0	0	46	46	46	46	46	46	46	46	46	46	46	46	0	0	0	2
3	0	0	0	46	46	46	0	0	0	46	46	46	46	46	46	46	46	46	46	46	46	46	46	46	3
4	0	0	0	0	0	0	46	46	46	0	0	0	46	46	46	46	46	46	46	46	46	92	92	92	4
5	0	0	0	0	0	0	92	92	92	0	0	0	0	0	0	0	0	0	46	46	46	92	92	92	5
ID	1	1	1	66	66	66	17	17	17	67	67	67	54	54	54	55	55	55	49	49	49	19	19	19	ID
[DEG]	0~79	44~85	57~85	27~79	37~85	56~85	28~79	38~85	57~85	27~79	36~85	58~85	27~79	36~85	57~85	27~79	40~85	58~85	27~79	40~85	59~85	28~79	41~85	59~85	[DEG]
	2	2	2	2	2	2	2	2	2	2	2	2	2	2	2	2	2	2	2	2	2	2	2	2	
	26t	26t	26t	26t	26t	26t	26t	26t	26t	26t	26t	26t	26t	26t	26t	26t	26t	26t	26t	26t	26t	26t	26t	26t	

m	43.0	43.0	43.0	43.0	43.0	43.0	47.4	47.4	47.4	47.4	47.4	47.4	51.7	51.7	51.7	51.7	51.7	51.7	56.0	56.0	56.0	60.0	60.0	60.0	m
°	5	20	40	5	20	40	5	20	40	5	20	40	5	20	40	5	20	40	5	20	40	5	20	40	°
3.0																									3.0
3.5																									3.5
4.0																									4.0
4.5																									4.5
5.0																									5.0
6.0																									6.0
7.0																									7.0
8.0																									8.0
9.0		10.6			7.2																				9.0
10.0		10.6			7.2			8.4			7.5														10.0
11.0		10.6			7.2			8.4			7.5			7.0			6.4			6.4					11.0
12.0	10.6	10.6	8.3	7.2	7.2	7.2		8.4			7.5			7.0			6.4			6.4			5.7		12.0
14.0	10.6	10.6	7.9	7.2	7.2	7.2	8.4	8.4	8.0	7.5	7.5	7.5		7.0	7.0	6.4	6.4	6.4		6.4			5.7		14.0
16.0	10.6	10.2	7.6	7.2	7.2	7.2	8.4	8.4	7.7	7.5	7.5	7.5	7.0	7.0	7.0	6.4	6.4	6.4	6.4	6.4	6.4		5.7	5.7	16.0
18.0	10.6	9.6	7.4	7.2	7.2	7.2	8.4	8.4	7.4	7.5	7.5	7.5	7.0	7.0	7.0	6.4	6.4	6.4	6.4	6.4	6.4	5.7	5.7	5.7	18.0
20.0	9.7	9.2	7.1	7.2	7.2	7.1	8.4	8.4	7.2	7.5	7.5	7.2	7.0	7.0	7.0	6.4	6.4	6.4	6.4	6.4	6.4	5.7	5.7	5.7	20.0
22.0	8.1	8.7	6.9	7.2	7.2	6.9	8.3	8.4	7.0	7.5	7.5	7.0	7.0	7.0	7.0	6.4	6.4	6.4	6.4	6.4	6.4	5.7	5.7	5.7	22.0
24.0	6.8	7.3	6.7	7.2	7.0	6.7	7.0	7.5	6.8	7.5	7.5	6.8	7.0	7.0	6.9	6.4	6.4	6.4	6.4	6.4	6.4	5.7	5.7	5.5	24.0
26.0	5.7	6.2	6.6	6.8	6.6	6.4	5.9	6.4	6.6	6.5	6.9	6.7	6.1	6.5	6.7	6.4	6.4	6.4	6.3	6.4	6.4	5.5	5.4	5.2	26.0
28.0	4.8	5.2	5.6	6.3	6.2	6.0	5.0	5.4	5.8	5.5	5.9	6.3	5.1	5.5	6.0	5.7	6.1	6.2	5.3	5.7	6.2	5.3	5.1	4.9	28.0
30.0	4.1	4.4	4.7	5.5	5.7	5.6	4.2	4.6	4.9	4.8	5.1	5.4	4.4	4.7	5.1	4.9	5.3	5.6	4.6	4.9	5.3	4.5	4.8	4.6	30.0
32.0	3.4	3.7	4.0	4.8	5.1	5.3	3.6	3.9	4.2	4.1	4.4	4.7	3.7	4.0	4.3	4.3	4.6	4.9	3.9	4.2	4.5	3.8	4.2	4.3	32.0
34.0	2.8	3.1		4.2	4.4		3.0	3.3	3.5	3.5	3.7	4.0	3.1	3.4	3.7	3.7	3.9	4.2	3.3	3.6	3.9	3.3	3.6	3.9	34.0
36.0	2.3	2.5		3.7	3.9		2.5	2.7		3.0	3.2		2.6	2.9	3.1	3.2	3.4	3.6	2.8	3.0	3.3	2.7	3.0	3.3	36.0
38.0	1.8	2.0		3.3	3.4		1.9	2.2		2.5	2.7		2.1	2.4		2.7	2.9		2.3	2.6	2.8	2.3	2.5	2.8	38.0
40.0	1.3	1.5		2.8	3.0		1.5	1.7		2.1	2.3		1.6	1.9		2.3	2.5		1.9	2.1		1.8	2.1	2.3	40.0
44.0				2.1						1.3	1.5					1.5	1.7		1.0	1.3			1.2		44.0
48.0				1.5																					48.0
52.0																									52.0
56.0																									56.0
60.0																									60.0
64.0																									64.0
68.0																									68.0
72.0																									72.0
1	92	92	92	0	0	0	92	92	92	46	46	46	92	92	92	46	46	46	92	92	92	100	100	100	1
2	92	92	92	46	46	46	92	92	92	92	92	92	92	92	92	92	92	92	92	92	92	100	100	100	2
3	46	46	46	92	92	92	92	92	92	92	92	92	92	92	92	92	92	92	92	92	92	100	100	100	3
4	46	46	46	92	92	92	46	46	46	92	92	92	92	92	92	92	92	92	92	92	92	100	100	100	4
5	46	46	46	92	92	92	46	46	46	46	46	46	46	46	46	92	92	92	92	92	92	100	100	100	5
ID	42	42	42	21	21	21	38	38	38	31	31	31	32	32	32	23	23	23	24	24	24	16	16	16	ID
[DEG]	40~79	42~85	58~85	21~79	43~85	58~85	46~79	48~85	59~85	39~79	41~85	59~85	50~79	52~85	60~85	45~79	47~85	60~85	49~79	51~85	61~85	57~79	55~85	61~85	[DEG]
	2	2	2	1	1	1	1	1	1	1	1	1	1	1	1	1	1	1	1	1	1	1	1	1	
	26t	26t	26t	8.7t	8.7t	8.7t	8.7t	8.7t	8.7t	8.7t	8.7t	8.7t	8.7t	8.7t	8.7t	8.7t	8.7t	8.7t	8.7t	8.7t	8.7t	8.7t	8.7t	8.7t	

油圧チルトジブ

HLJ	1.0m + 17.0m	25.4 t	8.0m x 6.2m	360 °	JPN

m	12.8	12.8	12.8	25.8	25.8	25.8	25.8	25.8	25.8	30.1	30.1	30.1	30.1	30.1	30.1	34.4	34.4	34.4	34.4	34.4	34.4	34.4	34.4	34.4	m
°	5	20	40	5	20	40	5	20	40	5	20	40	5	20	40	5	20	40	5	20	40	5	20	40	°
3.0																									3.0
3.5																									3.5
4.0																									4.0
4.5																									4.5
5.0																									5.0
6.0	7.3																								6.0
7.0	6.8																								7.0
8.0	6.4	5.4		7.0			5.6																		8.0
9.0	6.0	5.1		6.7			5.6			6.7			6.5												9.0
10.0	5.7	4.8		6.4	5.0		5.6	4.8		6.5			6.3			6.3			5.9			4.6			10.0
11.0	5.3	4.6		6.1	4.8		5.6	4.6		6.2	4.9		6.1	4.8		6.1	4.8		5.9	4.7		4.6			11.0
12.0	5.1	4.4		5.8	4.7		5.5	4.5		6.0	4.7		5.9	4.6		5.9	4.7		5.7	4.6		4.6	4.4		12.0
14.0	4.6	4.0	3.5	5.4	4.4		5.1	4.2		5.5	4.4		5.4	4.4		5.5	4.4		5.4	4.3		4.6	4.2		14.0
16.0	4.2	3.7	3.3	5.0	4.1	3.4	4.8	3.9	3.3	5.1	4.2	3.4	5.1	4.1	3.4	5.2	4.2	3.4	5.1	4.1		4.6	4.0		16.0
18.0	3.8	3.4	3.1	4.6	3.9	3.3	4.4	3.7	3.2	4.8	3.9	3.3	4.8	3.9	3.3	4.9	3.9	3.3	4.8	3.9	3.2	4.6	3.8	3.2	18.0
20.0	3.5	3.2	3.0	4.3	3.7	3.1	4.2	3.5	3.1	4.5	3.7	3.2	4.5	3.7	3.2	4.6	3.8	3.2	4.5	3.7	3.1	4.3	3.6	3.1	20.0
22.0	3.3	3.1	2.9	4.1	3.5	3.0	3.9	3.4	3.0	4.3	3.6	3.1	4.2	3.5	3.0	4.3	3.6	3.1	4.3	3.5	3.0	4.1	3.5	3.0	22.0
24.0	3.1	2.9		3.8	3.3	2.9	3.7	3.2	2.9	4.0	3.4	3.0	4.0	3.4	2.9	4.1	3.5	3.0	4.0	3.4	2.9	3.9	3.3	2.9	24.0
26.0	3.0			3.6	3.2	2.9	3.5	3.1	2.8	3.8	3.3	2.9	3.8	3.2	2.9	3.9	3.3	2.9	3.8	3.3	2.9	3.7	3.2	2.8	26.0
28.0				3.5	3.1	2.8	3.4	3.0	2.7	3.6	3.2	2.8	3.6	3.1	2.8	3.7	3.2	2.8	3.7	3.2	2.8	3.6	3.1	2.7	28.0
30.0				3.3	3.0		3.2	2.9		3.5	3.0	2.8	3.4	3.0	2.7	3.6	3.1	2.8	3.5	3.1	2.7	3.4	3.0	2.7	30.0
32.0				3.2	2.9		3.1	2.8		3.3	2.9	2.7	3.3	2.9	2.7	3.4	3.0	2.7	3.4	3.0	2.7	3.3	2.9	2.6	32.0
34.0				3.0	2.8		3.0	2.7		3.2	2.9		3.2	2.8		3.3	2.9	2.7	3.3	2.9	2.6	3.2	2.8	2.6	34.0
36.0				2.9	2.7		2.9	2.7		2.8	2.8		3.1	2.8		2.9	2.8		3.1	2.8		3.1	2.7		36.0
38.0				2.9			2.8			2.4	2.7		3.0	2.7		2.5	2.8		3.0	2.7		3.0	2.7		38.0
40.0										2.0			2.6			2.1	2.4		2.7	2.7		2.9	2.6		40.0
44.0																1.3			2.0			2.6			44.0
48.0																									48.0
52.0																									52.0
56.0																									56.0
60.0																									60.0
64.0																									64.0
68.0																									68.0
72.0																									72.0
1	0	0	0	46	46	46	0	0	0	92	92	92	46	46	46	92	92	92	46	46	46	0	0	0	1
2	0	0	0	46	46	46	0	0	0	46	46	46	46	46	46	46	46	46	46	46	46	0	0	0	2
3	0	0	0	46	46	46	0	0	0	46	46	46	46	46	46	46	46	46	46	46	46	46	46	46	3
4	0	0	0	0	0	0	46	46	46	0	0	0	46	46	46	46	46	46	46	46	46	92	92	92	4
5	0	0	0	0	0	0	92	92	92	0	0	0	0	0	0	0	0	0	46	46	46	92	92	92	5
ID	1	1	1	66	66	66	17	17	17	67	67	67	54	54	54	55	55	55	49	49	49	19	19	19	ID
[DEG]	0~81	41~85	56~85	25~81	36~85	59~85	26~81	37~85	60~85	31~81	40~85	57~85	31~81	40~85	57~85	30~81	43~85	58~85	31~81	44~85	58~85	32~81	44~85	58~85	[DEG]
	1	1	1	1	1	1	1	1	1	1	1	1	1	1	1	1	1	1	1	1	1	1	1	1	
	8.7t	8.7t	8.7t	8.7t	8.7t	8.7t	8.7t	8.7t	8.7t	8.7t	8.7t	8.7t	8.7t	8.7t	8.7t	8.7t	8.7t	8.7t	8.7t	8.7t	8.7t	8.7t	8.7t	8.7t	

m	43.0	43.0	43.0	43.0	43.0	43.0	47.4	47.4	47.4	47.4	47.4	47.4	51.7	51.7	51.7	51.7	51.7	51.7	56.0	56.0	56.0	60.0	60.0	60.0	m
°	5	20	40	5	20	40	5	20	40	5	20	40	5	20	40	5	20	40	5	20	40	5	20	40	°
3.0																									3.0
3.5																									3.5
4.0																									4.0
4.5																									4.5
5.0																									5.0
6.0																									6.0
7.0																									7.0
8.0																									8.0
9.0																									9.0
10.0																									10.0
11.0																									11.0
12.0	5.5			4.1																					12.0
14.0	5.4	4.3		4.1	4.1		4.7	4.2		4.3	4.2		4.1			3.9									14.0
16.0	5.1	4.1		4.1	3.9		4.7	4.1		4.3	4.0		4.1	4.0		3.9	3.9		3.9	3.8		3.6	3.6		16.0
18.0	4.8	3.9	3.2	4.1	3.8		4.7	3.9		4.3	3.8		4.1	3.8		3.9	3.7		3.9	3.7		3.6	3.6		18.0
20.0	4.6	3.8	3.1	4.1	3.6	3.1	4.6	3.7	3.1	4.3	3.7	3.1	4.1	3.7	3.1	3.9	3.6	3.0	3.9	3.6		3.6	3.5		20.0
22.0	4.4	3.6	3.0	4.1	3.5	3.0	4.4	3.6	3.0	4.3	3.5	3.0	4.1	3.5	3.0	3.9	3.5	2.9	3.9	3.5	2.9	3.6	3.4	2.9	22.0
24.0	4.2	3.5	3.0	4.0	3.3	2.9	4.2	3.5	2.9	4.1	3.4	2.9	4.1	3.4	2.9	3.9	3.4	2.9	3.9	3.3	2.9	3.6	3.3	2.8	24.0
26.0	4.0	3.3	2.9	3.8	3.2	2.8	4.0	3.3	2.9	3.9	3.3	2.8	4.0	3.3	2.8	3.8	3.2	2.8	3.8	3.2	2.8	3.6	3.2	2.8	26.0
28.0	3.8	3.2	2.8	3.7	3.1	2.7	3.9	3.2	2.8	3.8	3.2	2.8	3.8	3.2	2.8	3.7	3.1	2.7	3.7	3.1	2.7	3.6	3.1	2.7	28.0
30.0	3.7	3.1	2.8	3.5	3.0	2.7	3.7	3.1	2.7	3.6	3.1	2.7	3.7	3.1	2.7	3.6	3.1	2.7	3.6	3.1	2.7	3.5	3.0	2.6	30.0
32.0	3.5	3.0	2.7	3.4	2.9	2.6	3.6	3.0	2.7	3.5	3.0	2.7	3.5	3.0	2.7	3.5	3.0	2.6	3.5	3.0	2.6	3.4	2.9	2.6	32.0
34.0	3.4	2.9	2.6	3.3	2.9	2.6	3.5	3.0	2.6	3.4	2.9	2.6	3.4	2.9	2.6	3.4	2.9	2.6	3.4	2.9	2.6	3.3	2.9	2.5	34.0
36.0	3.0	2.9	2.6	3.2	2.8	2.5	2.9	2.9	2.6	3.3	2.8	2.6	3.0	2.9	2.6	3.3	2.8	2.5	3.1	2.8	2.5	3.1	2.8	2.5	36.0
38.0	2.5	2.8	2.6	3.1	2.7	2.5	2.5	2.8	2.5	2.9	2.8	2.5	2.5	2.8	2.5	3.0	2.7	2.5	2.7	2.8	2.5	2.6	2.7	2.5	38.0
40.0	2.1	2.5		3.0	2.6		2.1	2.5	2.5	2.5	2.7	2.5	2.1	2.5	2.5	2.6	2.7	2.4	2.3	2.7	2.4	2.2	2.6	2.4	40.0
44.0	1.3	1.7		2.5	2.5		1.3	1.7		1.8	2.1		1.4	1.8	2.1	1.9	2.2	2.4	1.5	1.9	2.3	1.5	1.9	2.2	44.0
48.0				1.9	2.1					1.2	1.4					1.3	1.6			1.2				1.5	48.0
52.0				1.4																					52.0
56.0																									56.0
60.0																									60.0
64.0																									64.0
68.0																									68.0
72.0																									72.0
1	92	92	92	0	0	0	92	92	92	46	46	46	92	92	92	46	46	46	92	92	92	100	100	100	1
2	92	92	92	46	46	46	92	92	92	92	92	92	92	92	92	92	92	92	92	92	92	100	100	100	2
3	46	46	46	92	92	92	92	92	92	92	92	92	92	92	92	92	92	92	92	92	92	100	100	100	3
4	46	46	46	92	92	92	46	46	46	92	92	92	92	92	92	92	92	92	92	92	92	100	100	100	4
5	46	46	46	92	92	92	46	46	46	46	46	46	46	46	46	92	92	92	92	92	92	100	100	100	5
ID	42	42	42	21	21	21	38	38	38	31	31	31	32	32	32	23	23	23	24	24	24	16	16	16	ID
[DEG]	44~81	48~85	60~85	31~81	43~85	60~85	49~81	53~85	61~85	44~81	47~85	61~85	53~81	56~85	59~85	49~81	52~85	60~85	56~81	55~85	63~85	59~81	62~85	61~85	[DEG]
	1	1	1	1	1	1	1	1	1	1	1	1	1	1	1	1	1	1	1	1	1	1	1	1	
	8.7t	8.7t	8.7t	8.7t	8.7t	8.7t	8.7t	8.7t	8.7t	8.7t	8.7t	8.7t	8.7t	8.7t	8.7t	8.7t	8.7t	8.7t	8.7t	8.7t	8.7t	8.7t	8.7t	8.7t	

HLJ	1.0m + 24.0m	25.4 t	8.0m x 6.2m	360 °	JPN

m	12.8	12.8	12.8	25.8	25.8	25.8	25.8	25.8	25.8	30.1	30.1	30.1	30.1	30.1	30.1	34.4	34.4	34.4	34.4	34.4	34.4	34.4	34.4	34.4	m
°	5	20	40	5	20	40	5	20	40	5	20	40	5	20	40	5	20	40	5	20	40	5	20	40	°
3.0																									3.0
3.5																									3.5
4.0																									4.0
4.5																									4.5
5.0																									5.0
6.0																									6.0
7.0																									7.0
8.0	5.1																								8.0
9.0	5.1																								9.0
10.0	5.1			4.9			3.7																		10.0
11.0	5.1			4.9			3.7			4.6			4.3												11.0
12.0	5.1	4.5		4.9			3.7			4.6			4.3			4.2			4.0			3.2			12.0
14.0	4.8	4.0		4.9	4.4		3.7	3.7		4.6	4.4		4.3	4.3		4.2			4.0			3.2			14.0
16.0	4.3	3.6		4.9	4.1		3.7	3.7		4.6	4.1		4.3	4.1		4.2	4.1		4.0	4.0		3.2	3.2		16.0
18.0	3.8	3.3		4.6	3.8		3.7	3.7		4.6	3.8		4.3	3.9		4.2	3.9		4.0	3.8		3.2	3.2		18.0
20.0	3.4	3.0	2.6	4.3	3.5		3.7	3.4		4.4	3.6		4.3	3.6		4.2	3.6		4.0	3.7		3.2	3.2		20.0
22.0	3.1	2.7	2.4	4.1	3.2	2.6	3.7	3.2	2.5	4.2	3.3	2.6	4.2	3.4	2.6	4.2	3.4	2.6	4.0	3.4		3.2	3.2		22.0
24.0	2.8	2.5	2.2	3.7	3.0	2.4	3.7	3.0	2.4	4.0	3.1	2.5	4.0	3.1	2.5	4.0	3.2	2.5	3.9	3.2	2.5	3.2	3.2	2.5	24.0
26.0	2.6	2.3	2.1	3.5	2.8	2.3	3.4	2.8	2.3	3.7	2.9	2.4	3.7	3.0	2.4	3.9	3.0	2.4	3.8	3.1	2.4	3.2	3.0	2.4	26.0
28.0	2.4	2.2	2.0	3.2	2.7	2.2	3.2	2.6	2.2	3.4	2.8	2.3	3.4	2.8	2.3	3.6	2.9	2.3	3.6	2.9	2.3	3.2	2.8	2.3	28.0
30.0	2.2	2.0		3.0	2.5	2.1	2.9	2.5	2.1	3.2	2.6	2.2	3.2	2.6	2.2	3.4	2.7	2.2	3.4	2.7	2.2	3.2	2.7	2.2	30.0
32.0	2.0	1.9		2.8	2.4	2.0	2.8	2.4	2.0	3.0	2.5	2.1	3.0	2.5	2.1	3.2	2.6	2.1	3.2	2.6	2.1	3.1	2.6	2.1	32.0
34.0				2.6	2.3	2.0	2.6	2.3	2.0	2.8	2.4	2.0	2.8	2.4	2.0	3.0	2.5	2.1	3.0	2.5	2.1	3.0	2.5	2.1	34.0
36.0				2.5	2.2	1.9	2.4	2.1	1.9	2.6	2.3	2.0	2.7	2.3	2.0	2.8	2.4	2.0	2.8	2.4	2.0	2.8	2.4	2.0	36.0
38.0				2.3	2.1		2.3	2.1		2.5	2.2	1.9	2.5	2.2	1.9	2.7	2.3	1.9	2.7	2.3	1.9	2.6	2.3	1.9	38.0
40.0				2.2	2.0		2.2	2.0		2.4	2.1		2.4	2.1		2.4	2.2	1.9	2.5	2.2	1.9	2.5	2.2	1.9	40.0
44.0				2.0			2.0			1.7	1.9		2.1	1.9		1.7	2.0		2.3	2.0		2.3	2.0		44.0
48.0													1.6				1.4		1.7	1.9		2.0	1.9		48.0
52.0																			1.2			1.8			52.0
56.0																									56.0
60.0																									60.0
64.0																									64.0
68.0																									68.0
72.0																									72.0
1	0	0	0	46	46	46	0	0	0	92	92	92	46	46	46	92	92	92	46	46	46	0	0	0	1
2	0	0	0	46	46	46	0	0	0	46	46	46	46	46	46	46	46	46	46	46	46	0	0	0	2
3	0	0	0	46	46	46	0	0	0	46	46	46	46	46	46	46	46	46	46	46	46	46	46	46	3
4	0	0	0	0	0	0	46	46	46	0	0	0	46	46	46	46	46	46	46	46	46	92	92	92	4
5	0	0	0	0	0	0	92	92	92	0	0	0	0	0	0	0	0	0	46	46	46	92	92	92	5
ID	1	1	1	66	66	66	17	17	17	67	67	67	54	54	54	55	55	55	49	49	49	19	19	19	ID
[DEG]	0~81	37~85	59~85	28~81	44~85	57~85	29~81	45~85	58~85	37~81	43~85	59~85	28~81	43~85	59~85	43~81	41~85	59~85	28~81	42~85	59~85	30~81	43~85	60~85	[DEG]
	1	1	1	1	1	1	1	1	1	1	1	1	1	1	1	1	1	1	1	1	1	1	1	1	
	8.7t	8.7t	8.7t	8.7t	8.7t	8.7t	8.7t	8.7t	8.7t	8.7t	8.7t	8.7t	8.7t	8.7t	8.7t	8.7t	8.7t	8.7t	8.7t	8.7t	8.7t	8.7t	8.7t	8.7t	

m	43.0	43.0	43.0	43.0	43.0	43.0	47.4	47.4	47.4	47.4	47.4	47.4	51.7	51.7	51.7	51.7	51.7	51.7	56.0	56.0	56.0	60.0	60.0	60.0	m
°	5	20	40	5	20	40	5	20	40	5	20	40	5	20	40	5	20	40	5	20	40	5	20	40	°
3.0																									3.0
3.5																									3.5
4.0																									4.0
4.5																									4.5
5.0																									5.0
6.0																									6.0
7.0																									7.0
8.0																									8.0
9.0																									9.0
10.0																									10.0
11.0																									11.0
12.0																									12.0
14.0	3.8			2.9																					14.0
16.0	3.8			2.9			3.3			3.1			3.0			2.9									16.0
18.0	3.8	3.8		2.9	2.9		3.3	3.3		3.1	3.1		3.0	3.0		2.9			2.9						18.0
20.0	3.8	3.6		2.9	2.9		3.3	3.3		3.1	3.1		3.0	3.0		2.9	2.9		2.9	2.9		2.4			20.0
22.0	3.8	3.5		2.9	2.9		3.3	3.3		3.1	3.1		3.0	3.0		2.9	2.9		2.9	2.9		2.4	2.4		22.0
24.0	3.8	3.3	2.5	2.9	2.9		3.3	3.3		3.1	3.1		3.0	3.0		2.9	2.9		2.9	2.9		2.4	2.4		24.0
26.0	3.8	3.2	2.4	2.9	2.9	2.4	3.3	3.2	2.4	3.1	3.1	2.4	3.0	3.0		2.9	2.9		2.9	2.9		2.4	2.4		26.0
28.0	3.7	3.0	2.3	2.9	2.9	2.3	3.3	3.0	2.3	3.1	3.0	2.3	3.0	3.0	2.3	2.9	2.9	2.3	2.9	2.9	2.3	2.4	2.4		28.0
30.0	3.5	2.9	2.3	2.9	2.8	2.2	3.3	2.9	2.3	3.1	2.9	2.3	3.0	2.9	2.3	2.9	2.9	2.3	2.9	2.9	2.3	2.4	2.4	2.0	30.0
32.0	3.4	2.8	2.2	2.9	2.7	2.2	3.3	2.8	2.2	3.1	2.8	2.2	3.0	2.8	2.2	2.9	2.8	2.2	2.9	2.8	2.2	2.4	2.4	2.0	32.0
34.0	3.3	2.6	2.1	2.9	2.6	2.1	3.3	2.7	2.1	3.1	2.7	2.1	3.0	2.7	2.2	2.9	2.7	2.2	2.9	2.8	2.2	2.4	2.4	1.9	34.0
36.0	3.1	2.5	2.1	2.9	2.5	2.1	3.2	2.6	2.1	3.1	2.6	2.1	3.0	2.6	2.1	2.9	2.6	2.1	2.9	2.7	2.1	2.4	2.4	1.9	36.0
38.0	2.8	2.4	2.0	2.9	2.4	2.0	2.7	2.5	2.0	3.1	2.5	2.0	2.7	2.5	2.0	2.9	2.5	2.1	2.8	2.6	2.1	2.4	2.3	1.9	38.0
40.0	2.4	2.3	2.0	2.8	2.3	2.0	2.3	2.4	2.0	2.7	2.4	2.0	2.3	2.4	2.0	2.8	2.4	2.0	2.4	2.5	2.0	2.3	2.3	1.8	40.0
44.0	1.6	2.1	1.9	2.6	2.2	1.9	1.6	2.1	1.9	2.0	2.2	1.9	1.6	2.1	1.9	2.1	2.3	1.9	1.7	2.2	1.9	1.6	2.1	1.7	44.0
48.0		1.4		2.0	2.0			1.4	1.8	1.4	1.8	1.8		1.4	1.9	1.4	1.8	1.9		1.5	1.9		1.5	1.7	48.0
52.0				1.5	1.8						1.2						1.3				1.3			1.3	52.0
56.0					1.3																				56.0
60.0																									60.0
64.0																									64.0
68.0																									68.0
72.0																									72.0
1	92	92	92	0	0	0	92	92	92	46	46	46	92	92	92	46	46	46	92	92	92	100	100	100	1
2	92	92	92	46	46	46	92	92	92	92	92	92	92	92	92	92	92	92	92	92	92	100	100	100	2
3	46	46	46	92	92	92	92	92	92	92	92	92	92	92	92	92	92	92	92	92	92	100	100	100	3
4	46	46	46	92	92	92	46	46	46	92	92	92	92	92	92	92	92	92	92	92	92	100	100	100	4
5	46	46	46	92	92	92	46	46	46	46	46	46	46	46	46	92	92	92	92	92	92	100	100	100	5
ID	42	42	42	21	21	21	38	38	38	31	31	31	32	32	32	23	23	23	24	24	24	16	16	16	ID
[DEG]	52~81	52~85	61~85	44~81	41~85	62~85	56~81	56~85	60~85	52~81	51~85	60~85	59~81	59~85	64~85	55~81	55~85	64~85	62~81	62~85	62~85	64~81	65~85	65~85	[DEG]
	1	1	1	1	1	1	1	1	1	1	1	1	1	1	1	1	1	1	1	1	1	1	1	1	
	8.7t	8.7t	8.7t	8.7t	8.7t	8.7t	8.7t	8.7t	8.7t	8.7t	8.7t	8.7t	8.7t	8.7t	8.7t	8.7t	8.7t	8.7t	8.7t	8.7t	8.7t	8.7t	8.7t	8.7t	

油圧チルトジブ

HLJ	1.0m + 31.0m	25.4 t	8.0m x 6.2m	360 °	JPN

m	12.8	12.8	12.8	25.8	25.8	25.8	25.8	25.8	25.8	30.1	30.1	30.1	30.1	30.1	30.1	34.4	34.4	34.4	34.4	34.4	34.4	34.4	34.4	34.4	m
°	5	20	40	5	20	40	5	20	40	5	20	40	5	20	40	5	20	40	5	20	40	5	20	40	°
3.0																									3.0
3.5																									3.5
4.0																									4.0
4.5																									4.5
5.0																									5.0
6.0																									6.0
7.0																									7.0
8.0																									8.0
9.0																									9.0
10.0	3.5																								10.0
11.0	3.5																								11.0
12.0	3.5			3.3			2.6																		12.0
14.0	3.5			3.3			2.6			3.1			2.9			2.9			2.8			2.3			14.0
16.0	3.5	3.0		3.3			2.6			3.1			2.9			2.9			2.8			2.3			16.0
18.0	3.2	2.7		3.3	3.0		2.6	2.6		3.1	3.0		2.9	2.9		2.9			2.8			2.3			18.0
20.0	2.9	2.5		3.3	2.7		2.6	2.6		3.1	2.8		2.9	2.8		2.9	2.8		2.8	2.8		2.3	2.3		20.0
22.0	2.6	2.2		3.3	2.5		2.6	2.5		3.1	2.6		2.9	2.6		2.9	2.6		2.8	2.6		2.3	2.3		22.0
24.0	2.3	2.0	1.7	3.0	2.3		2.6	2.3		3.1	2.4		2.9	2.4		2.9	2.4		2.8	2.4		2.3	2.3		24.0
26.0	2.1	1.9	1.6	2.7	2.2	1.7	2.6	2.1		2.9	2.2		2.9	2.2		2.9	2.3		2.8	2.3		2.3	2.2		26.0
28.0	1.9	1.7	1.5	2.5	2.0	1.6	2.5	2.0	1.6	2.7	2.1	1.6	2.7	2.1	1.6	2.8	2.2	1.6	2.8	2.2		2.3	2.1		28.0
30.0	1.7	1.6	1.4	2.3	1.9	1.5	2.3	1.9	1.5	2.5	2.0	1.5	2.5	2.0	1.5	2.6	2.0	1.6	2.6	2.0	1.6	2.3	2.0	1.5	30.0
32.0	1.6	1.5	1.3	2.2	1.8	1.4	2.1	1.8	1.4	2.3	1.9	1.5	2.3	1.9	1.5	2.4	1.9	1.5	2.4	1.9	1.5	2.3	1.9	1.5	32.0
34.0	1.5	1.4	1.2	2.0	1.7	1.4	2.0	1.7	1.4	2.1	1.7	1.4	2.2	1.8	1.4	2.3	1.8	1.4	2.3	1.8	1.4	2.2	1.8	1.4	34.0
36.0	1.4	1.3	1.2	1.9	1.6	1.3	1.8	1.6	1.3	2.0	1.7	1.3	2.0	1.7	1.3	2.1	1.7	1.4	2.1	1.7	1.4	2.1	1.7	1.4	36.0
38.0	1.3	1.2		1.7	1.5	1.3	1.7	1.5	1.3	1.9	1.6	1.3	1.9	1.6	1.3	2.0	1.6	1.3	2.0	1.6	1.3	2.0	1.6	1.3	38.0
40.0	1.2			1.6	1.4	1.2	1.6	1.4	1.2	1.8	1.5	1.2	1.8	1.5	1.2	1.9	1.6	1.3	1.9	1.6	1.3	1.9	1.5	1.3	40.0
44.0				1.4	1.3		1.4	1.3		1.6	1.3	1.2	1.6	1.3	1.2	1.7	1.4	1.2	1.7	1.4	1.2	1.6	1.4	1.2	44.0
48.0				1.3	1.2		1.3	1.2		1.3	1.2		1.4	1.2		1.3	1.3	1.1	1.5	1.3	1.1	1.5	1.3	1.1	48.0
52.0				1.2			1.1				1.1		1.3	1.1			1.2		1.3	1.2		1.3	1.2		52.0
56.0																				1.1		1.2	1.1		56.0
60.0																						1.1			60.0
64.0																									64.0
68.0																									68.0
72.0																									72.0
1	0	0	0	46	46	46	0	0	0	92	92	92	46	46	46	92	92	92	46	46	46	0	0	0	1
2	0	0	0	46	46	46	0	0	0	46	46	46	46	46	46	46	46	46	46	46	46	0	0	0	2
3	0	0	0	46	46	46	0	0	0	46	46	46	46	46	46	46	46	46	46	46	46	46	46	46	3
4	0	0	0	0	0	0	46	46	46	0	0	0	46	46	46	46	46	46	46	46	46	92	92	92	4
5	0	0	0	0	0	0	92	92	92	0	0	0	0	0	0	0	0	0	46	46	46	92	92	92	5
ID	1	1	1	66	66	66	17	17	17	67	67	67	54	54	54	55	55	55	49	49	49	19	19	19	ID
[DEG]	0~81	40~85	56~85	25~81	41~85	63~85	26~81	42~85	64~85	42~81	40~85	60~85	35~81	40~85	60~85	47~81	47~85	58~85	41~81	39~85	58~85	27~81	41~85	59~85	[DEG]
	1	1	1	1	1	1	1	1	1	1	1	1	1	1	1	1	1	1	1	1	1	1	1	1	
	8.7t	8.7t	8.7t	8.7t	8.7t	8.7t	8.7t	8.7t	8.7t	8.7t	8.7t	8.7t	8.7t	8.7t	8.7t	8.7t	8.7t	8.7t	8.7t	8.7t	8.7t	8.7t	8.7t	8.7t	

m	43.0	43.0	43.0	43.0	43.0	43.0	47.4	47.4	47.4	47.4	47.4	47.4	51.7	51.7	51.7	51.7	51.7	51.7	56.0	56.0	56.0	60.0	60.0	60.0	m
°	5	20	40	5	20	40	5	20	40	5	20	40	5	20	40	5	20	40	5	20	40	5	20	40	°
3.0																									3.0
3.5																									3.5
4.0																									4.0
4.5																									4.5
5.0																									5.0
6.0																									6.0
7.0																									7.0
8.0																									8.0
9.0																									9.0
10.0																									10.0
11.0																									11.0
12.0																									12.0
14.0																									14.0
16.0	2.7			2.1																					16.0
18.0	2.7			2.1			2.4			2.2			2.2			2.1									18.0
20.0	2.7			2.1			2.4			2.2			2.2			2.1									20.0
22.0	2.7	2.6		2.1	2.1		2.4	2.4		2.2	2.2		2.2			2.1			2.1			1.6			22.0
24.0	2.7	2.5		2.1	2.1		2.4	2.4		2.2	2.2		2.2	2.2		2.1	2.1		2.1	2.1		1.6			24.0
26.0	2.7	2.3		2.1	2.1		2.4	2.3		2.2	2.2		2.2	2.2		2.1	2.1		2.1	2.1		1.6	1.6		26.0
28.0	2.7	2.2		2.1	2.1		2.4	2.2		2.2	2.2		2.2	2.2		2.1	2.1		2.1	2.1		1.6	1.6		28.0
30.0	2.7	2.1	1.6	2.1	2.1		2.4	2.1		2.2	2.1		2.2	2.1		2.1	2.1		2.1	2.1		1.6	1.6		30.0
32.0	2.6	2.0	1.5	2.1	2.0	1.5	2.4	2.0	1.5	2.2	2.0	1.5	2.2	2.0		2.1	2.0		2.1	2.0		1.6	1.6		32.0
34.0	2.5	1.9	1.4	2.1	1.9	1.4	2.4	1.9	1.5	2.2	1.9	1.4	2.2	1.9	1.4	2.1	1.9	1.4	2.1	1.9	1.4	1.6	1.6		34.0
36.0	2.3	1.8	1.4	2.1	1.8	1.4	2.4	1.8	1.4	2.2	1.8	1.4	2.2	1.9	1.4	2.1	1.8	1.4	2.1	1.9	1.4	1.6	1.6	1.2	36.0
38.0	2.2	1.7	1.3	2.1	1.7	1.3	2.3	1.8	1.4	2.2	1.8	1.4	2.2	1.8	1.4	2.1	1.8	1.4	2.1	1.8	1.4	1.6	1.6	1.2	38.0
40.0	2.1	1.7	1.3	2.0	1.6	1.3	2.2	1.7	1.3	2.2	1.7	1.3	2.2	1.7	1.3	2.1	1.7	1.3	2.1	1.7	1.3	1.6	1.6	1.2	40.0
44.0	1.8	1.5	1.2	1.8	1.5	1.2	1.7	1.5	1.2	1.9	1.5	1.2	1.7	1.6	1.2	2.0	1.6	1.2	1.8	1.6	1.2	1.6	1.5	1.1	44.0
48.0	1.2	1.4	1.2	1.6	1.4	1.2		1.4	1.2	1.5	1.4	1.2		1.5	1.2	1.5	1.5	1.2		1.5	1.2		1.4	1.1	48.0
52.0		1.1	1.1	1.5	1.3	1.1			1.1		1.3	1.1			1.1		1.4	1.1			1.1			1.0	52.0
56.0				1.1	1.2													1.1			1.1				56.0
60.0																									60.0
64.0																									64.0
68.0																									68.0
72.0																									72.0
1	92	92	92	0	0	0	92	92	92	46	46	46	92	92	92	46	46	46	92	92	92	100	100	100	1
2	92	92	92	46	46	46	92	92	92	92	92	92	92	92	92	92	92	92	92	92	92	100	100	100	2
3	46	46	46	92	92	92	92	92	92	92	92	92	92	92	92	92	92	92	92	92	92	100	100	100	3
4	46	46	46	92	92	92	46	46	46	92	92	92	92	92	92	92	92	92	92	92	92	100	100	100	4
5	46	46	46	92	92	92	46	46	46	46	46	46	46	46	46	92	92	92	92	92	92	100	100	100	5
ID	42	42	42	21	21	21	38	38	38	31	31	31	32	32	32	23	23	23	24	24	24	16	16	16	ID
[DEG]	55~81	56~85	60~85	47~81	52~85	61~85	62~81	63~85	64~85	58~81	59~85	64~85	64~81	66~85	67~85	61~81	63~85	63~85	67~81	68~85	66~85	69~81	70~85	71~85	[DEG]
	1	1	1	1	1	1	1	1	1	1	1	1	1	1	1	1	1	1	1	1	1	1	1	1	
	8.7t	8.7t	8.7t	8.7t	8.7t	8.7t	8.7t	8.7t	8.7t	8.7t	8.7t	8.7t	8.7t	8.7t	8.7t	8.7t	8.7t	8.7t	8.7t	8.7t	8.7t	8.7t	8.7t	8.7t	

HLJ	1.0m + 2.8m	25.4 t	8.0m x 5.0m	360 °	JPN

m	12.8	12.8	12.8	25.8	25.8	25.8	25.8	25.8	25.8	30.1	30.1	30.1	30.1	30.1	30.1	34.4	34.4	34.4	34.4	34.4	34.4	34.4	34.4	34.4	m
°	5	20	40	5	20	40	5	20	40	5	20	40	5	20	40	5	20	40	5	20	40	5	20	40	°
3.0		31.6	25.3																						3.0
3.5	38.1	30.3	24.6		31.4			25.0																	3.5
4.0	36.1	29.1	23.9		30.6	23.4		24.2						31.2											4.0
4.5	34.3	28.0	23.3		29.8	23.1		23.3	21.5		30.2			30.4											4.5
5.0	32.7	27.0	22.8		29.0	22.7		22.4	20.6		29.5	22.8		29.8	22.9		29.9			24.9			16.9		5.0
6.0	29.9	25.3	21.8		27.7	22.0		20.5	19.0		28.3	22.2		28.5	22.3		28.9	22.5		24.9	23.0		16.9	16.9	6.0
7.0	27.7	23.8	20.9		26.5	21.3		18.9	17.7		27.1	21.6		27.4	21.7		27.9	22.0		24.9	22.4		16.9	16.9	7.0
8.0	25.7	22.6	20.2	32.0	25.4	20.8	18.6	17.5	16.5		26.1	21.1		26.3	21.2		26.9	21.5		24.3	21.9		16.9	16.7	8.0
9.0	24.1	21.5		28.3	24.4	20.2	17.3	16.3	15.5	27.6	25.2	20.6	28.8	25.4	20.7		26.0	21.0		23.1	20.9		16.2	15.9	9.0
10.0	22.7	20.6		23.6	23.5	19.7	16.1	15.3	14.6	23.1	23.6	20.2	24.1	24.5	20.2		24.1	20.6	24.4	22.1	20.1		15.3	14.9	10.0
11.0	20.9	19.9		20.1	20.5	19.3	15.1	14.4	13.7	19.5	20.0	19.8	20.6	21.0	19.8	20.0	20.5	20.2	21.3	21.1	19.3	14.8	14.4	14.0	11.0
12.0	18.0	18.2		17.3	17.6	18.0	14.2	13.6	13.0	16.8	17.1	17.5	17.8	18.1	18.4	17.3	17.6	18.0	18.5	18.8	18.6	13.9	13.5	13.2	12.0
14.0				13.2	13.4	13.7	12.6	12.2	11.8	12.7	13.0	13.3	13.6	13.9	14.1	13.1	13.4	13.7	14.3	14.6	14.8	12.3	12.1	11.8	14.0
16.0				10.3	10.5	10.7	11.4	11.1	10.8	9.8	10.0	10.3	10.7	10.9	11.1	10.2	10.5	10.7	11.4	11.6	11.8	11.1	10.9	10.6	16.0
18.0				8.1	8.3		10.3	10.0		7.7	7.8	8.0	8.6	8.7	8.9	8.1	8.3	8.5	9.2	9.4	9.5	9.9	9.8	9.7	18.0
20.0				6.5	6.6		8.6	8.7		6.0	6.2		6.9	7.0		6.4	6.6	6.7	7.5	7.6	7.8	8.8	8.8	8.8	20.0
22.0				5.2	5.3		7.3	7.3		4.7	4.8		5.6	5.7		5.1	5.3		6.2	6.3		7.5	7.6		22.0
24.0				4.1			6.2			3.6	3.7		4.5	4.6		4.1	4.2		5.1	5.2		6.4	6.4		24.0
26.0										2.8	2.8		3.6	3.7		3.2	3.3		4.2	4.3		5.5	5.5		26.0
28.0										2.0			2.9			2.4	2.5		3.4	3.5		4.7	4.7		28.0
30.0																1.8			2.8			4.0			30.0
32.0																			2.2			3.5			32.0
34.0																									34.0
36.0																									36.0
38.0																									38.0
40.0																									40.0
44.0																									44.0
48.0																									48.0
52.0																									52.0
56.0																									56.0
60.0																									60.0
64.0																									64.0
68.0																									68.0
72.0																									72.0
1	0	0	0	46	46	46	0	0	0	92	92	92	46	46	46	92	92	92	46	46	46	0	0	0	1
2	0	0	0	46	46	46	0	0	0	46	46	46	46	46	46	46	46	46	46	46	46	0	0	0	2
3	0	0	0	46	46	46	0	0	0	46	46	46	46	46	46	46	46	46	46	46	46	46	46	46	3
4	0	0	0	0	0	0	46	46	46	0	0	0	46	46	46	46	46	46	46	46	46	92	92	92	4
5	0	0	0	0	0	0	92	92	92	0	0	0	0	0	0	0	0	0	46	46	46	92	92	92	5
ID	1	1	1	66	66	66	17	17	17	67	67	67	54	54	54	55	55	55	49	49	49	19	19	19	ID
[DEG]	0~76	34~85	58~85	28~76	37~85	56~85	29~76	38~85	57~85	28~76	36~85	58~85	28~76	36~85	57~85	34~76	40~85	58~85	28~76	41~85	59~85	28~76	41~85	59~85	[DEG]
	5	5	5	4	4	4	3	3	3	4	4	4	4	4	4	4	4	4	3	3	3	2	2	2	
	60t	60t	60t	60t	60t	60t	26t	26t	26t	60t	60t	60t	60t	60t	60t	60t	60t	60t	26t	26t	26t	26t	26t	26t	

m	43.0	43.0	43.0	43.0	43.0	43.0	47.4	47.4	47.4	47.4	47.4	47.4	51.7	51.7	51.7	51.7	51.7	51.7	56.0	56.0	56.0	60.0	60.0	60.0	m
°	5	20	40	5	20	40	5	20	40	5	20	40	5	20	40	5	20	40	5	20	40	5	20	40	°
3.0																									3.0
3.5																									3.5
4.0																									4.0
4.5																									4.5
5.0																									5.0
6.0																									6.0
7.0		17.1	17.1		12.1	12.1		13.9			12.4														7.0
8.0		17.1	17.1		12.1	12.1		13.9	13.9		12.4	12.4		11.1			9.8								8.0
9.0		17.1	17.1		12.1	12.1		13.9	13.9		12.4	12.4		11.1	11.1		9.8	9.8		9.0	9.0		7.8		9.0
10.0		17.1	17.1		12.1	12.1		13.9	13.9		12.4	12.4		11.1	11.1		9.8	9.8		9.0	9.0		7.8	7.8	10.0
11.0		17.1	17.1		12.1	12.1		13.9	13.9		12.4	12.4		11.1	11.1		9.8	9.8		9.0	9.0		7.8	7.8	11.0
12.0		17.1	17.1		12.1	12.1		13.9	13.9		12.4	12.4		11.1	11.1		9.8	9.8		9.0	9.0		7.8	7.8	12.0
14.0	13.8	14.1	14.3	12.1	12.1	12.1		13.9	13.9		12.4	12.4		11.1	11.1		9.8	9.8		9.0	9.0		7.8	7.8	14.0
16.0	10.8	11.1	11.3	11.5	11.4	11.2	11.0	11.2	11.4	11.6	11.8	12.0	11.1	11.1	11.1	9.8	9.8	9.8		9.0	9.0		7.8	7.8	16.0
18.0	8.7	8.9	9.1	10.3	10.3	10.2	8.8	9.0	9.2	9.4	9.6	9.8	9.0	9.2	9.4	9.7	9.8	9.8	9.0	9.0	9.0		7.8	7.8	18.0
20.0	7.0	7.2	7.3	8.6	8.7	8.8	7.1	7.3	7.4	7.7	7.9	8.0	7.3	7.5	7.7	8.0	8.2	8.3	7.6	7.8	7.9	7.6	7.8	7.8	20.0
22.0	5.7	5.8	5.9	7.2	7.3	7.4	5.8	5.9	6.1	6.4	6.5	6.6	6.0	6.1	6.3	6.7	6.8	6.9	6.3	6.4	6.5	6.2	6.4	6.5	22.0
24.0	4.6	4.7	4.8	6.1	6.2	6.3	4.7	4.8	4.9	5.3	5.4	5.5	4.9	5.0	5.1	5.6	5.7	5.8	5.2	5.3	5.4	5.2	5.3	5.4	24.0
26.0	3.7	3.8	3.9	5.2	5.3	5.3	3.8	3.9	4.0	4.4	4.5	4.6	4.0	4.1	4.2	4.6	4.7	4.8	4.3	4.4	4.5	4.3	4.4	4.5	26.0
28.0	2.9	3.0		4.4	4.5		3.0	3.1	3.2	3.6	3.7	3.8	3.2	3.3	3.4	3.9	4.0	4.1	3.5	3.6	3.7	3.5	3.6	3.7	28.0
30.0	2.3	2.4		3.8	3.8		2.4	2.5		3.0	3.0		2.6	2.7	2.8	3.2	3.3	3.4	2.9	2.9	3.0	2.8	2.9	3.0	30.0
32.0	1.7	1.8		3.2	3.2		1.8	1.9		2.4	2.5		2.0	2.1		2.7	2.7		2.3	2.4	2.4	2.3	2.4	2.4	32.0
34.0		1.3		2.7	2.7		1.3	1.4		1.9	2.0		1.5	1.6		2.2	2.2		1.8	1.9		1.8	1.9	1.9	34.0
36.0				2.3	2.3					1.5	1.5					1.7	1.8		1.4	1.4		1.3	1.4		36.0
38.0				1.9												1.4	1.4								38.0
40.0				1.5																					40.0
44.0																									44.0
48.0																									48.0
52.0																									52.0
56.0																									56.0
60.0																									60.0
64.0																									64.0
68.0																									68.0
72.0																									72.0
1	92	92	92	0	0	0	92	92	92	46	46	46	92	92	92	46	46	46	92	92	92	100	100	100	1
2	92	92	92	46	46	46	92	92	92	92	92	92	92	92	92	92	92	92	92	92	92	100	100	100	2
3	46	46	46	92	92	92	92	92	92	92	92	92	92	92	92	92	92	92	92	92	92	100	100	100	3
4	46	46	46	92	92	92	46	46	46	92	92	92	92	92	92	92	92	92	92	92	92	100	100	100	4
5	46	46	46	92	92	92	46	46	46	46	46	46	46	46	46	92	92	92	92	92	92	100	100	100	5
ID	42	42	42	21	21	21	38	38	38	31	31	31	32	32	32	23	23	23	24	24	24	16	16	16	ID
[DEG]	46~76	42~85	57~85	28~76	39~85	58~85	48~76	48~85	58~85	44~76	45~85	58~85	52~76	53~85	59~85	47~76	47~85	59~85	54~76	54~85	60~85	57~76	58~85	60~85	[DEG]
	2	2	2	2	2	2	2	2	2	2	2	2	2	2	2	2	2	2	2	2	2	2	2	2	
	26t	26t	26t	26t	26t	26t	26t	26t	26t	26t	26t	26t	26t	26t	26t	26t	26t	26t	26t	26t	26t	26t	26t	26t	

油圧チルトジブ

HLJ	1.0m + 9.2m	25.4 t	8.0m x 5.0m	360 °	JPN

m	12.8	12.8	12.8	25.8	25.8	25.8	25.8	25.8	25.8	30.1	30.1	30.1	30.1	30.1	30.1	34.4	34.4	34.4	34.4	34.4	34.4	34.4	34.4	34.4	m
°	5	20	40	5	20	40	5	20	40	5	20	40	5	20	40	5	20	40	5	20	40	5	20	40	°
3.0																									3.0
3.5																									3.5
4.0	15.0																								4.0
4.5	15.0																								4.5
5.0	15.0	13.5																							5.0
6.0	15.0	12.4			14.4			14.1																	6.0
7.0	14.8	11.4	8.9	15.0	13.5		14.3	13.3			13.6			13.8			13.8			13.4					7.0
8.0	13.4	10.6	8.4	15.0	12.8		14.3	12.5		15.0	12.9		15.0	13.1			13.2			13.3			10.1		8.0
9.0	12.2	9.9	8.0	15.0	12.1	8.7	14.0	11.9	8.6	15.0	12.3	8.8	15.0	12.5	8.8	15.0	12.6		13.4	12.7			10.1		9.0
10.0	11.2	9.2	7.6	15.0	11.5	8.4	13.2	11.3	8.4	15.0	11.8	8.5	15.0	11.9	8.6	15.0	12.1	8.6	13.4	12.2	8.6	10.1	10.1		10.0
11.0	10.4	8.7	7.3	15.0	10.9	8.2	12.5	10.8	8.1	15.0	11.3	8.3	15.0	11.4	8.3	15.0	11.6	8.4	13.4	11.7	8.4	10.1	10.1	8.3	11.0
12.0	9.6	8.2	7.0	14.2	10.4	7.9	11.7	10.3	7.9	15.0	10.8	8.1	15.0	10.9	8.1	15.0	11.1	8.2	13.4	11.2	8.2	10.1	10.1	8.1	12.0
14.0	8.4	7.4	6.5	12.6	9.6	7.5	10.3	9.4	7.4	13.5	10.0	7.7	13.7	10.1	7.7	13.9	10.3	7.8	13.4	10.4	7.8	10.1	9.9	7.8	14.0
16.0	7.5	6.8		11.3	8.9	7.1	9.1	8.4	7.1	10.7	9.3	7.3	11.6	9.3	7.3	11.0	9.7	7.5	11.9	9.7	7.5	9.7	9.2	7.4	16.0
18.0	6.8			9.2	8.3	6.8	8.1	7.6	6.8	8.6	8.7	7.0	9.4	8.7	7.0	8.8	9.1	7.2	9.7	9.1	7.2	8.7	8.4	7.1	18.0
20.0				7.5	7.7	6.5	7.3	6.9	6.5	6.9	7.5	6.7	7.7	8.2	6.8	7.2	7.8	6.9	8.0	8.5	6.9	7.8	7.6	6.9	20.0
22.0				6.2	6.6	6.3	6.7	6.3	6.1	5.6	6.1	6.5	6.4	6.8	6.5	5.8	6.4	6.7	6.7	7.1	6.7	7.1	6.9	6.7	22.0
24.0				5.1	5.5		6.1	5.8		4.5	5.0	5.4	5.3	5.7	6.1	4.8	5.2	5.7	5.6	6.0	6.4	6.4	6.3	6.2	24.0
26.0				4.2	4.5		5.6	5.4		3.6	4.0		4.4	4.7		3.9	4.3	4.7	4.7	5.0	5.4	5.8	5.8	5.7	26.0
28.0				3.5	3.7		5.1	5.0		2.9	3.2		3.7	3.9		3.1	3.5		3.9	4.2		5.0	5.2		28.0
30.0				2.8			4.5			2.3	2.5		3.0	3.2		2.5	2.8		3.3	3.5		4.3	4.5		30.0
32.0										1.6	1.9		2.5	2.7		1.9	2.2		2.7	3.0		3.8	3.9		32.0
34.0													2.0			1.3	1.6		2.3	2.4		3.3	3.4		34.0
36.0																			1.8			2.8			36.0
38.0																			1.4			2.5			38.0
40.0																									40.0
44.0																									44.0
48.0																									48.0
52.0																									52.0
56.0																									56.0
60.0																									60.0
64.0																									64.0
68.0																									68.0
72.0																									72.0
1	0	0	0	46	46	46	0	0	0	92	92	92	46	46	46	92	92	92	46	46	46	0	0	0	1
2	0	0	0	46	46	46	0	0	0	46	46	46	46	46	46	46	46	46	46	46	46	0	0	0	2
3	0	0	0	46	46	46	0	0	0	46	46	46	46	46	46	46	46	46	46	46	46	46	46	46	3
4	0	0	0	0	0	0	46	46	46	0	0	0	46	46	46	46	46	46	46	46	46	92	92	92	4
5	0	0	0	0	0	0	92	92	92	0	0	0	0	0	0	0	0	0	46	46	46	92	92	92	5
ID	1	1	1	66	66	66	17	17	17	67	67	67	54	54	54	55	55	55	49	49	49	19	19	19	ID
[DEG]	0~79	44~85	57~85	27~79	37~85	56~85	28~79	38~85	57~85	33~79	36~85	57~85	27~79	36~85	57~85	37~79	40~85	58~85	27~79	40~85	59~85	27~79	41~85	59~85	[DEG]
	2	2	2	2	2	2	2	2	2	2	2	2	2	2	2	2	2	2	2	2	2	2	2	2	
	26t	26t	26t	26t	26t	26t	26t	26t	26t	26t	26t	26t	26t	26t	26t	26t	26t	26t	26t	26t	26t	26t	26t	26t	

m	43.0	43.0	43.0	43.0	43.0	43.0	47.4	47.4	47.4	47.4	47.4	47.4	51.7	51.7	51.7	51.7	51.7	51.7	56.0	56.0	56.0	60.0	60.0	60.0	m
°	5	20	40	5	20	40	5	20	40	5	20	40	5	20	40	5	20	40	5	20	40	5	20	40	°
3.0																									3.0
3.5																									3.5
4.0																									4.0
4.5																									4.5
5.0																									5.0
6.0																									6.0
7.0																									7.0
8.0																									8.0
9.0		10.6			7.2																				9.0
10.0		10.6			7.2			8.4			7.5														10.0
11.0		10.6			7.2			8.4			7.5			7.0			6.4			6.4					11.0
12.0	10.6	10.6	8.3	7.2	7.2	7.2		8.4			7.5			7.0			6.4			6.4			5.7		12.0
14.0	10.6	10.6	7.9	7.2	7.2	7.2	8.4	8.4	8.0	7.5	7.5	7.5		7.0	7.0	6.4	6.4	6.4		6.4			5.7		14.0
16.0	10.6	10.2	7.6	7.2	7.2	7.2	8.4	8.4	7.7	7.5	7.5	7.5	7.0	7.0	7.0	6.4	6.4	6.4	6.4	6.4	6.4		5.7	5.7	16.0
18.0	9.0	9.6	7.4	7.2	7.2	7.2	8.4	8.4	7.4	7.5	7.5	7.5	7.0	7.0	7.0	6.4	6.4	6.4	6.4	6.4	6.4	5.7	5.7	5.7	18.0
20.0	7.3	7.9	7.1	7.2	7.2	7.1	7.5	8.2	7.2	7.5	7.5	7.2	7.0	7.0	7.0	6.4	6.4	6.4	6.4	6.4	6.4	5.7	5.7	5.7	20.0
22.0	6.0	6.5	6.9	7.2	7.2	6.9	6.2	6.7	7.0	6.8	7.2	7.0	6.3	6.9	7.0	6.4	6.4	6.4	6.4	6.4	6.4	5.7	5.7	5.7	22.0
24.0	4.9	5.4	5.9	6.4	6.8	6.7	5.1	5.6	6.1	5.7	6.1	6.6	5.3	5.7	6.3	5.9	6.3	6.4	5.5	5.9	6.4	5.4	5.7	5.5	24.0
26.0	4.0	4.5	4.9	5.5	5.8	6.2	4.2	4.6	5.1	4.7	5.1	5.6	4.4	4.8	5.2	4.9	5.3	5.7	4.6	5.0	5.4	4.5	4.9	5.2	26.0
28.0	3.3	3.7	4.0	4.7	5.0	5.3	3.5	3.8	4.2	4.0	4.3	4.7	3.6	4.0	4.4	4.2	4.5	4.9	3.8	4.2	4.6	3.8	4.1	4.6	28.0
30.0	2.6	3.0	3.3	4.1	4.3	4.6	2.8	3.2	3.5	3.3	3.6	4.0	2.9	3.3	3.7	3.5	3.8	4.2	3.1	3.5	3.8	3.1	3.4	3.8	30.0
32.0	2.1	2.4	2.7	3.5	3.7	4.0	2.2	2.6	2.9	2.8	3.0	3.3	2.4	2.7	3.0	2.9	3.2	3.5	2.6	2.9	3.2	2.5	2.9	3.2	32.0
34.0	1.5	1.9		3.0	3.2		1.7	2.0	2.3	2.3	2.5	2.8	1.9	2.2	2.5	2.5	2.7	3.0	2.1	2.4	2.7	2.0	2.3	2.6	34.0
36.0		1.3		2.6	2.7			1.5		1.8	2.1		1.3	1.7	2.0	2.0	2.2	2.5	1.6	1.9	2.2	1.5	1.9	2.2	36.0
38.0				2.2	2.3					1.4	1.6					1.6	1.8			1.4	1.7		1.4	1.7	38.0
40.0				1.8	2.0						1.2					1.2	1.4								40.0
44.0				1.2																					44.0
48.0																									48.0
52.0																									52.0
56.0																									56.0
60.0																									60.0
64.0																									64.0
68.0																									68.0
72.0																									72.0
1	92	92	92	0	0	0	92	92	92	46	46	46	92	92	92	46	46	46	92	92	92	100	100	100	1
2	92	92	92	46	46	46	92	92	92	92	92	92	92	92	92	92	92	92	92	92	92	100	100	100	2
3	46	46	46	92	92	92	92	92	92	92	92	92	92	92	92	92	92	92	92	92	92	100	100	100	3
4	46	46	46	92	92	92	46	46	46	92	92	92	92	92	92	92	92	92	92	92	92	100	100	100	4
5	46	46	46	92	92	92	46	46	46	46	46	46	46	46	46	92	92	92	92	92	92	100	100	100	5
ID	42	42	42	21	21	21	38	38	38	31	31	31	32	32	32	23	23	23	24	24	24	16	16	16	ID
[DEG]	49~79	49~85	57~85	32~79	43~85	58~85	54~79	53~85	58~85	48~79	47~85	58~85	55~79	57~85	59~85	50~79	52~85	59~85	58~79	58~85	60~85	61~79	61~85	63~85	[DEG]
	2	2	2	1	1	1	1	1	1	1	1	1	1	1	1	1	1	1	1	1	1	1	1	1	
	26t	26t	26t	8.7t	8.7t	8.7t	8.7t	8.7t	8.7t	8.7t	8.7t	8.7t	8.7t	8.7t	8.7t	8.7t	8.7t	8.7t	8.7t	8.7t	8.7t	8.7t	8.7t	8.7t	

HLJ	1.0m + 17.0m	25.4 t	8.0m x 5.0m	360 °	JPN

m	12.8	12.8	12.8	25.8	25.8	25.8	25.8	25.8	25.8	30.1	30.1	30.1	30.1	30.1	30.1	34.4	34.4	34.4	34.4	34.4	34.4	34.4	34.4	34.4	m
°	5	20	40	5	20	40	5	20	40	5	20	40	5	20	40	5	20	40	5	20	40	5	20	40	°
3.0																									3.0
3.5																									3.5
4.0																									4.0
4.5																									4.5
5.0																									5.0
6.0	7.3																								6.0
7.0	6.8																								7.0
8.0	6.4	5.4		7.0			5.6																		8.0
9.0	6.0	5.1		6.7			5.6			6.7			6.5												9.0
10.0	5.7	4.8		6.4	5.0		5.6	4.8		6.5			6.3			6.3			5.9			4.6			10.0
11.0	5.3	4.6		6.1	4.8		5.6	4.6		6.2	4.9		6.1	4.8		6.1	4.8		5.9	4.7		4.6			11.0
12.0	5.1	4.4		5.8	4.7		5.5	4.5		6.0	4.7		5.9	4.6		5.9	4.7		5.7	4.6		4.6	4.4		12.0
14.0	4.6	4.0	3.5	5.4	4.4		5.1	4.2		5.5	4.4		5.4	4.4		5.5	4.4		5.4	4.3		4.6	4.2		14.0
16.0	4.2	3.7	3.3	5.0	4.1	3.4	4.8	3.9	3.3	5.1	4.2	3.4	5.1	4.1	3.4	5.2	4.2	3.4	5.1	4.1		4.6	4.0		16.0
18.0	3.8	3.4	3.1	4.6	3.9	3.3	4.4	3.7	3.2	4.8	3.9	3.3	4.8	3.9	3.3	4.9	3.9	3.3	4.8	3.9	3.2	4.6	3.8	3.2	18.0
20.0	3.5	3.2	3.0	4.3	3.7	3.1	4.2	3.5	3.1	4.5	3.7	3.2	4.5	3.7	3.2	4.6	3.8	3.2	4.5	3.7	3.1	4.3	3.6	3.1	20.0
22.0	3.3	3.1	2.9	4.1	3.5	3.0	3.9	3.4	3.0	4.3	3.6	3.1	4.2	3.5	3.0	4.3	3.6	3.1	4.3	3.5	3.0	4.1	3.5	3.0	22.0
24.0	3.1	2.9		3.8	3.3	2.9	3.7	3.2	2.9	4.0	3.4	3.0	4.0	3.4	2.9	4.1	3.5	3.0	4.0	3.4	2.9	3.9	3.3	2.9	24.0
26.0	3.0			3.6	3.2	2.9	3.5	3.1	2.8	3.8	3.3	2.9	3.8	3.2	2.9	3.9	3.3	2.9	3.8	3.3	2.9	3.7	3.2	2.8	26.0
28.0				3.5	3.1	2.8	3.4	3.0	2.7	3.6	3.2	2.8	3.6	3.1	2.8	3.7	3.2	2.8	3.7	3.2	2.8	3.6	3.1	2.7	28.0
30.0				3.3	3.0		3.2	2.9		3.2	3.0	2.8	3.4	3.0	2.7	3.3	3.1	2.8	3.5	3.1	2.7	3.4	3.0	2.7	30.0
32.0				3.2	2.9		3.1	2.8		2.6	2.9	2.7	3.3	2.9	2.7	2.7	3.0	2.7	3.4	3.0	2.7	3.3	2.9	2.6	32.0
34.0				2.7	2.8		3.0	2.7		2.1	2.6		2.8	2.8		2.2	2.7	2.7	2.9	2.9	2.6	3.2	2.8	2.6	34.0
36.0				2.2	2.5		2.9	2.7		1.7	2.1		2.3	2.6		1.8	2.2		2.5	2.8		3.1	2.7		36.0
38.0				1.9			2.8			1.3	1.6		1.9	2.2		1.4	1.8		2.1	2.4		2.9	2.7		38.0
40.0													1.6				1.4		1.7	2.0		2.6	2.6		40.0
44.0																						1.9			44.0
48.0																									48.0
52.0																									52.0
56.0																									56.0
60.0																									60.0
64.0																									64.0
68.0																									68.0
72.0																									72.0
1	0	0	0	46	46	46	0	0	0	92	92	92	46	46	46	92	92	92	46	46	46	0	0	0	1
2	0	0	0	46	46	46	0	0	0	46	46	46	46	46	46	46	46	46	46	46	46	0	0	0	2
3	0	0	0	46	46	46	0	0	0	46	46	46	46	46	46	46	46	46	46	46	46	46	46	46	3
4	0	0	0	0	0	0	46	46	46	0	0	0	46	46	46	46	46	46	46	46	46	92	92	92	4
5	0	0	0	0	0	0	92	92	92	0	0	0	0	0	0	0	0	0	46	46	46	92	92	92	5
ID	1	1	1	66	66	66	17	17	17	67	67	67	54	54	54	55	55	55	49	49	49	19	19	19	ID
[DEG]	0~81	41~85	56~85	25~81	36~85	59~85	26~81	37~85	60~85	36~81	40~85	57~85	31~81	40~85	57~85	42~81	43~85	58~85	39~81	43~85	58~85	32~81	44~85	58~85	[DEG]
	1	1	1	1	1	1	1	1	1	1	1	1	1	1	1	1	1	1	1	1	1	1	1	1	
	8.7t	8.7t	8.7t	8.7t	8.7t	8.7t	8.7t	8.7t	8.7t	8.7t	8.7t	8.7t	8.7t	8.7t	8.7t	8.7t	8.7t	8.7t	8.7t	8.7t	8.7t	8.7t	8.7t	8.7t	

m	43.0	43.0	43.0	43.0	43.0	43.0	47.4	47.4	47.4	47.4	47.4	47.4	51.7	51.7	51.7	51.7	51.7	51.7	56.0	56.0	56.0	60.0	60.0	60.0	m
°	5	20	40	5	20	40	5	20	40	5	20	40	5	20	40	5	20	40	5	20	40	5	20	40	°
3.0																									3.0
3.5																									3.5
4.0																									4.0
4.5																									4.5
5.0																									5.0
6.0																									6.0
7.0																									7.0
8.0																									8.0
9.0																									9.0
10.0																									10.0
11.0																									11.0
12.0	5.5			4.1																					12.0
14.0	5.4	4.3		4.1	4.1		4.7	4.2		4.3	4.2		4.1			3.9									14.0
16.0	5.1	4.1		4.1	3.9		4.7	4.1		4.3	4.0		4.1	4.0		3.9	3.9		3.9	3.8		3.6	3.6		16.0
18.0	4.8	3.9	3.2	4.1	3.8		4.7	3.9		4.3	3.8		4.1	3.8		3.9	3.7		3.9	3.7		3.6	3.6		18.0
20.0	4.6	3.8	3.1	4.1	3.6	3.1	4.6	3.7	3.1	4.3	3.7	3.1	4.1	3.7	3.1	3.9	3.6	3.0	3.9	3.6		3.6	3.5		20.0
22.0	4.4	3.6	3.0	4.1	3.5	3.0	4.4	3.6	3.0	4.3	3.5	3.0	4.1	3.5	3.0	3.9	3.5	2.9	3.9	3.5	2.9	3.6	3.4	2.9	22.0
24.0	4.2	3.5	3.0	4.0	3.3	2.9	4.2	3.5	2.9	4.1	3.4	2.9	4.1	3.4	2.9	3.9	3.4	2.9	3.9	3.3	2.9	3.6	3.3	2.8	24.0
26.0	4.0	3.3	2.9	3.8	3.2	2.8	4.0	3.3	2.9	3.9	3.3	2.8	4.0	3.3	2.8	3.8	3.2	2.8	3.8	3.2	2.8	3.6	3.2	2.8	26.0
28.0	3.8	3.2	2.8	3.7	3.1	2.7	3.9	3.2	2.8	3.8	3.2	2.8	3.8	3.2	2.8	3.7	3.1	2.7	3.7	3.1	2.7	3.6	3.1	2.7	28.0
30.0	3.3	3.1	2.8	3.5	3.0	2.7	3.3	3.1	2.7	3.6	3.1	2.7	3.4	3.1	2.7	3.6	3.1	2.7	3.5	3.1	2.7	3.4	3.0	2.6	30.0
32.0	2.8	3.0	2.7	3.4	2.9	2.6	2.7	3.0	2.7	3.2	3.0	2.7	2.8	3.0	2.7	3.3	3.0	2.6	2.9	3.0	2.6	2.9	2.9	2.6	32.0
34.0	2.3	2.7	2.6	3.3	2.9	2.6	2.2	2.7	2.6	2.7	2.9	2.6	2.3	2.8	2.6	2.8	2.9	2.6	2.4	2.9	2.6	2.4	2.9	2.5	34.0
36.0	1.8	2.3	2.6	2.9	2.8	2.5	1.8	2.3	2.6	2.2	2.7	2.6	1.9	2.3	2.6	2.4	2.8	2.5	2.0	2.5	2.5	1.9	2.4	2.5	36.0
38.0	1.4	1.8	2.2	2.5	2.7	2.5	1.4	1.8	2.3	1.8	2.2	2.5	1.5	1.9	2.4	2.0	2.3	2.5	1.6	2.0	2.5	1.5	2.0	2.5	38.0
40.0		1.4		2.2	2.4			1.4	1.8	1.5	1.8	2.2		1.5	1.9	1.6	2.0	2.3		1.6	2.1		1.6	2.0	40.0
44.0				1.6	1.8						1.2						1.3	1.6			1.3			1.3	44.0
48.0					1.2																				48.0
52.0																									52.0
56.0																									56.0
60.0																									60.0
64.0																									64.0
68.0																									68.0
72.0																									72.0
1	92	92	92	0	0	0	92	92	92	46	46	46	92	92	92	46	46	46	92	92	92	100	100	100	1
2	92	92	92	46	46	46	92	92	92	92	92	92	92	92	92	92	92	92	92	92	92	100	100	100	2
3	46	46	46	92	92	92	92	92	92	92	92	92	92	92	92	92	92	92	92	92	92	100	100	100	3
4	46	46	46	92	92	92	46	46	46	92	92	92	92	92	92	92	92	92	92	92	92	100	100	100	4
5	46	46	46	92	92	92	46	46	46	46	46	46	46	46	46	92	92	92	92	92	92	100	100	100	5
ID	42	42	42	21	21	21	38	38	38	31	31	31	32	32	32	23	23	23	24	24	24	16	16	16	ID
[DEG]	52~81	53~85	60~85	45~81	42~85	60~85	56~81	57~85	60~85	54~81	52~85	61~85	59~81	60~85	64~85	57~81	56~85	59~85	62~81	63~85	62~85	64~81	65~85	64~85	[DEG]
	1	1	1	1	1	1	1	1	1	1	1	1	1	1	1	1	1	1	1	1	1	1	1	1	
	8.7t	8.7t	8.7t	8.7t	8.7t	8.7t	8.7t	8.7t	8.7t	8.7t	8.7t	8.7t	8.7t	8.7t	8.7t	8.7t	8.7t	8.7t	8.7t	8.7t	8.7t	8.7t	8.7t	8.7t	

油圧チルトジブ

HLJ	1.0m + 24.0m	25.4 t	8.0m x 5.0m	360 °	JPN

m	12.8	12.8	12.8	25.8	25.8	25.8	25.8	25.8	25.8	30.1	30.1	30.1	30.1	30.1	30.1	34.4	34.4	34.4	34.4	34.4	34.4	34.4	34.4	34.4	m
°	5	20	40	5	20	40	5	20	40	5	20	40	5	20	40	5	20	40	5	20	40	5	20	40	°
3.0																									3.0
3.5																									3.5
4.0																									4.0
4.5																									4.5
5.0																									5.0
6.0																									6.0
7.0																									7.0
8.0	5.1																								8.0
9.0	5.1																								9.0
10.0	5.1			4.9			3.7																		10.0
11.0	5.1			4.9			3.7			4.6			4.3												11.0
12.0	5.1	4.5		4.9			3.7			4.6			4.3			4.2			4.0			3.2			12.0
14.0	4.8	4.0		4.9	4.4		3.7	3.7		4.6	4.4		4.3	4.3		4.2			4.0			3.2			14.0
16.0	4.3	3.6		4.9	4.1		3.7	3.7		4.6	4.1		4.3	4.1		4.2	4.1		4.0	4.0		3.2	3.2		16.0
18.0	3.8	3.3		4.6	3.8		3.7	3.7		4.6	3.8		4.3	3.9		4.2	3.9		4.0	3.8		3.2	3.2		18.0
20.0	3.4	3.0	2.6	4.3	3.5		3.7	3.4		4.4	3.6		4.3	3.6		4.2	3.6		4.0	3.7		3.2	3.2		20.0
22.0	3.1	2.7	2.4	4.1	3.2	2.6	3.7	3.2	2.5	4.2	3.3	2.6	4.2	3.4	2.6	4.2	3.4	2.6	4.0	3.4		3.2	3.2		22.0
24.0	2.8	2.5	2.2	3.7	3.0	2.4	3.7	3.0	2.4	4.0	3.1	2.5	4.0	3.1	2.5	4.0	3.2	2.5	3.9	3.2	2.5	3.2	3.2	2.5	24.0
26.0	2.6	2.3	2.1	3.5	2.8	2.3	3.4	2.8	2.3	3.7	2.9	2.4	3.7	3.0	2.4	3.9	3.0	2.4	3.8	3.1	2.4	3.2	3.0	2.4	26.0
28.0	2.4	2.2	2.0	3.2	2.7	2.2	3.2	2.6	2.2	3.4	2.8	2.3	3.4	2.8	2.3	3.6	2.9	2.3	3.6	2.9	2.3	3.2	2.8	2.3	28.0
30.0	2.2	2.0		3.0	2.5	2.1	2.9	2.5	2.1	3.2	2.6	2.2	3.2	2.6	2.2	3.4	2.7	2.2	3.4	2.7	2.2	3.2	2.7	2.2	30.0
32.0	2.0	1.9		2.8	2.4	2.0	2.8	2.4	2.0	3.0	2.5	2.1	3.0	2.5	2.1	3.1	2.6	2.1	3.2	2.6	2.1	3.1	2.6	2.1	32.0
34.0				2.6	2.3	2.0	2.6	2.3	2.0	2.6	2.4	2.0	2.8	2.4	2.0	2.6	2.5	2.1	3.0	2.5	2.1	3.0	2.5	2.1	34.0
36.0				2.5	2.2	1.9	2.4	2.1	1.9	2.1	2.3	2.0	2.7	2.3	2.0	2.2	2.4	2.0	2.7	2.4	2.0	2.8	2.4	2.0	36.0
38.0				2.3	2.1		2.3	2.1		1.7	2.2	1.9	2.3	2.2	1.9	1.8	2.3	1.9	2.3	2.3	1.9	2.6	2.3	1.9	38.0
40.0				1.9	2.0		2.2	2.0		1.4	1.8		1.9	2.1		1.4	1.9	1.9	2.0	2.2	1.9	2.5	2.2	1.9	40.0
44.0				1.3			2.0						1.3	1.6			1.2		1.4	1.7		2.1	2.0		44.0
48.0																				1.1		1.6	1.8		48.0
52.0																						1.2			52.0
56.0																									56.0
60.0																									60.0
64.0																									64.0
68.0																									68.0
72.0																									72.0
1	0	0	0	46	46	46	0	0	0	92	92	92	46	46	46	92	92	92	46	46	46	0	0	0	1
2	0	0	0	46	46	46	0	0	0	46	46	46	46	46	46	46	46	46	46	46	46	0	0	0	2
3	0	0	0	46	46	46	0	0	0	46	46	46	46	46	46	46	46	46	46	46	46	46	46	46	3
4	0	0	0	0	0	0	46	46	46	0	0	0	46	46	46	46	46	46	46	46	46	92	92	92	4
5	0	0	0	0	0	0	92	92	92	0	0	0	0	0	0	0	0	0	46	46	46	92	92	92	5
ID	1	1	1	66	66	66	17	17	17	67	67	67	54	54	54	55	55	55	49	49	49	19	19	19	ID
[DEG]	0~81	37~85	59~85	28~81	44~85	57~85	29~81	45~85	58~85	44~81	50~85	59~85	37~81	42~85	59~85	49~81	48~85	59~85	43~81	41~85	59~85	29~81	43~85	60~85	[DEG]
	1	1	1	1	1	1	1	1	1	1	1	1	1	1	1	1	1	1	1	1	1	1	1	1	
	8.7t	8.7t	8.7t	8.7t	8.7t	8.7t	8.7t	8.7t	8.7t	8.7t	8.7t	8.7t	8.7t	8.7t	8.7t	8.7t	8.7t	8.7t	8.7t	8.7t	8.7t	8.7t	8.7t	8.7t	

m	43.0	43.0	43.0	43.0	43.0	43.0	47.4	47.4	47.4	47.4	47.4	47.4	51.7	51.7	51.7	51.7	51.7	51.7	56.0	56.0	56.0	60.0	60.0	60.0	m
°	5	20	40	5	20	40	5	20	40	5	20	40	5	20	40	5	20	40	5	20	40	5	20	40	°
3.0																									3.0
3.5																									3.5
4.0																									4.0
4.5																									4.5
5.0																									5.0
6.0																									6.0
7.0																									7.0
8.0																									8.0
9.0																									9.0
10.0																									10.0
11.0																									11.0
12.0																									12.0
14.0	3.8			2.9																					14.0
16.0	3.8			2.9			3.3			3.1			3.0			2.9									16.0
18.0	3.8	3.8		2.9	2.9		3.3	3.3		3.1	3.1		3.0	3.0		2.9			2.9						18.0
20.0	3.8	3.6		2.9	2.9		3.3	3.3		3.1	3.1		3.0	3.0		2.9	2.9		2.9	2.9		2.4			20.0
22.0	3.8	3.5		2.9	2.9		3.3	3.3		3.1	3.1		3.0	3.0		2.9	2.9		2.9	2.9		2.4	2.4		22.0
24.0	3.8	3.3	2.5	2.9	2.9		3.3	3.3		3.1	3.1		3.0	3.0		2.9	2.9		2.9	2.9		2.4	2.4		24.0
26.0	3.8	3.2	2.4	2.9	2.9	2.4	3.3	3.2	2.4	3.1	3.1	2.4	3.0	3.0		2.9	2.9		2.9	2.9		2.4	2.4		26.0
28.0	3.7	3.0	2.3	2.9	2.9	2.3	3.3	3.0	2.3	3.1	3.0	2.3	3.0	3.0	2.3	2.9	2.9	2.3	2.9	2.9	2.3	2.4	2.4		28.0
30.0	3.5	2.9	2.3	2.9	2.8	2.2	3.3	2.9	2.3	3.1	2.9	2.3	3.0	2.9	2.3	2.9	2.9	2.3	2.9	2.9	2.3	2.4	2.4	2.0	30.0
32.0	3.1	2.8	2.2	2.9	2.7	2.2	3.0	2.8	2.2	3.1	2.8	2.2	3.0	2.8	2.2	2.9	2.8	2.2	2.9	2.8	2.2	2.4	2.4	2.0	32.0
34.0	2.5	2.6	2.1	2.9	2.6	2.1	2.5	2.7	2.1	2.9	2.7	2.1	2.5	2.7	2.2	2.9	2.7	2.2	2.6	2.8	2.2	2.4	2.4	1.9	34.0
36.0	2.1	2.5	2.1	2.9	2.5	2.1	2.0	2.6	2.1	2.4	2.6	2.1	2.1	2.6	2.1	2.5	2.6	2.1	2.2	2.7	2.1	2.1	2.4	1.9	36.0
38.0	1.7	2.3	2.0	2.7	2.4	2.0	1.6	2.2	2.0	2.0	2.5	2.0	1.7	2.3	2.0	2.1	2.5	2.1	1.8	2.4	2.1	1.7	2.3	1.9	38.0
40.0	1.3	1.9	2.0	2.3	2.3	2.0		1.8	2.0	1.7	2.2	2.0		1.9	2.0	1.7	2.3	2.0		2.0	2.0		1.9	1.8	40.0
44.0			1.7	1.7	2.0	1.9			1.7		1.5	1.9			1.7		1.6	1.9			1.8			1.7	44.0
48.0				1.2	1.5							1.3						1.4							48.0
52.0																									52.0
56.0																									56.0
60.0																									60.0
64.0																									64.0
68.0																									68.0
72.0																									72.0
1	92	92	92	0	0	0	92	92	92	46	46	46	92	92	92	46	46	46	92	92	92	100	100	100	1
2	92	92	92	46	46	46	92	92	92	92	92	92	92	92	92	92	92	92	92	92	92	100	100	100	2
3	46	46	46	92	92	92	92	92	92	92	92	92	92	92	92	92	92	92	92	92	92	100	100	100	3
4	46	46	46	92	92	92	46	46	46	92	92	92	92	92	92	92	92	92	92	92	92	100	100	100	4
5	46	46	46	92	92	92	46	46	46	46	46	46	46	46	46	92	92	92	92	92	92	100	100	100	5
ID	42	42	42	21	21	21	38	38	38	31	31	31	32	32	32	23	23	23	24	24	24	16	16	16	ID
[DEG]	56~81	62~85	61~85	48~81	53~85	62~85	62~81	64~85	65~85	60~81	60~85	60~85	64~81	67~85	67~85	63~81	63~85	63~85	66~81	69~85	70~85	68~81	71~85	72~85	[DEG]
	1	1	1	1	1	1	1	1	1	1	1	1	1	1	1	1	1	1	1	1	1	1	1	1	
	8.7t	8.7t	8.7t	8.7t	8.7t	8.7t	8.7t	8.7t	8.7t	8.7t	8.7t	8.7t	8.7t	8.7t	8.7t	8.7t	8.7t	8.7t	8.7t	8.7t	8.7t	8.7t	8.7t	8.7t	

HLJ	1.0m + 31.0m	25.4 t	8.0m x 5.0m	360 °	JPN

m	12.8	12.8	12.8	25.8	25.8	25.8	25.8	25.8	25.8	30.1	30.1	30.1	30.1	30.1	30.1	34.4	34.4	34.4	34.4	34.4	34.4	34.4	34.4	34.4	m
°	5	20	40	5	20	40	5	20	40	5	20	40	5	20	40	5	20	40	5	20	40	5	20	40	°
3.0																									3.0
3.5																									3.5
4.0																									4.0
4.5																									4.5
5.0																									5.0
6.0																									6.0
7.0																									7.0
8.0																									8.0
9.0																									9.0
10.0	3.5																								10.0
11.0	3.5																								11.0
12.0	3.5			3.3			2.6																		12.0
14.0	3.5			3.3			2.6			3.1			2.9			2.9			2.8			2.3			14.0
16.0	3.5	3.0		3.3			2.6			3.1			2.9			2.9			2.8			2.3			16.0
18.0	3.2	2.7		3.3	3.0		2.6	2.6		3.1	3.0		2.9	2.9		2.9			2.8			2.3			18.0
20.0	2.9	2.5		3.3	2.7		2.6	2.6		3.1	2.8		2.9	2.8		2.9	2.8		2.8	2.8		2.3	2.3		20.0
22.0	2.6	2.2		3.3	2.5		2.6	2.5		3.1	2.6		2.9	2.6		2.9	2.6		2.8	2.6		2.3	2.3		22.0
24.0	2.3	2.0	1.7	3.0	2.3		2.6	2.3		3.1	2.4		2.9	2.4		2.9	2.4		2.8	2.4		2.3	2.3		24.0
26.0	2.1	1.9	1.6	2.7	2.2	1.7	2.6	2.1		2.9	2.2		2.9	2.2		2.9	2.3		2.8	2.3		2.3	2.2		26.0
28.0	1.9	1.7	1.5	2.5	2.0	1.6	2.5	2.0	1.6	2.7	2.1	1.6	2.7	2.1	1.6	2.8	2.2	1.6	2.8	2.2		2.3	2.1		28.0
30.0	1.7	1.6	1.4	2.3	1.9	1.5	2.3	1.9	1.5	2.5	2.0	1.5	2.5	2.0	1.5	2.6	2.0	1.6	2.6	2.0	1.6	2.3	2.0	1.5	30.0
32.0	1.6	1.5	1.3	2.2	1.8	1.4	2.1	1.8	1.4	2.3	1.9	1.5	2.3	1.9	1.5	2.4	1.9	1.5	2.4	1.9	1.5	2.3	1.9	1.5	32.0
34.0	1.5	1.4	1.2	2.0	1.7	1.4	2.0	1.7	1.4	2.1	1.7	1.4	2.2	1.8	1.4	2.3	1.8	1.4	2.3	1.8	1.4	2.2	1.8	1.4	34.0
36.0	1.4	1.3	1.2	1.9	1.6	1.3	1.8	1.6	1.3	2.0	1.7	1.3	2.0	1.7	1.3	2.1	1.7	1.4	2.1	1.7	1.4	2.1	1.7	1.4	36.0
38.0	1.3	1.2		1.7	1.5	1.3	1.7	1.5	1.3	1.9	1.6	1.3	1.9	1.6	1.3	2.0	1.6	1.3	2.0	1.6	1.3	2.0	1.6	1.3	38.0
40.0	1.2			1.6	1.4	1.2	1.6	1.4	1.2	1.7	1.5	1.2	1.8	1.5	1.2	1.7	1.6	1.3	1.9	1.6	1.3	1.9	1.5	1.3	40.0
44.0				1.4	1.3		1.4	1.3			1.3	1.2	1.5	1.3	1.2		1.4	1.2	1.5	1.4	1.2	1.6	1.4	1.2	44.0
48.0					1.2		1.3	1.2						1.2				1.1		1.3	1.1	1.5	1.3	1.1	48.0
52.0							1.1															1.2	1.2		52.0
56.0																							1.1		56.0
60.0																									60.0
64.0																									64.0
68.0																									68.0
72.0																									72.0
1	0	0	0	46	46	46	0	0	0	92	92	92	46	46	46	92	92	92	46	46	46	0	0	0	1
2	0	0	0	46	46	46	0	0	0	46	46	46	46	46	46	46	46	46	46	46	46	0	0	0	2
3	0	0	0	46	46	46	0	0	0	46	46	46	46	46	46	46	46	46	46	46	46	46	46	46	3
4	0	0	0	0	0	0	46	46	46	0	0	0	46	46	46	46	46	46	46	46	46	92	92	92	4
5	0	0	0	0	0	0	92	92	92	0	0	0	0	0	0	0	0	0	46	46	46	92	92	92	5
ID	1	1	1	66	66	66	17	17	17	67	67	67	54	54	54	55	55	55	49	49	49	19	19	19	ID
[DEG]	0~81	40~85	56~85	42~81	41~85	63~85	26~81	42~85	64~85	53~81	54~85	60~85	48~81	48~85	60~85	57~81	58~85	58~85	52~81	53~85	58~85	43~81	41~85	59~85	[DEG]
	1	1	1	1	1	1	1	1	1	1	1	1	1	1	1	1	1	1	1	1	1	1	1	1	
	8.7t	8.7t	8.7t	8.7t	8.7t	8.7t	8.7t	8.7t	8.7t	8.7t	8.7t	8.7t	8.7t	8.7t	8.7t	8.7t	8.7t	8.7t	8.7t	8.7t	8.7t	8.7t	8.7t	8.7t	

m	43.0	43.0	43.0	43.0	43.0	43.0	47.4	47.4	47.4	47.4	47.4	47.4	51.7	51.7	51.7	51.7	51.7	51.7	56.0	56.0	56.0	60.0	60.0	60.0	m
°	5	20	40	5	20	40	5	20	40	5	20	40	5	20	40	5	20	40	5	20	40	5	20	40	°
3.0																									3.0
3.5																									3.5
4.0																									4.0
4.5																									4.5
5.0																									5.0
6.0																									6.0
7.0																									7.0
8.0																									8.0
9.0																									9.0
10.0																									10.0
11.0																									11.0
12.0																									12.0
14.0																									14.0
16.0	2.7			2.1																					16.0
18.0	2.7			2.1			2.4			2.2			2.2			2.1									18.0
20.0	2.7			2.1			2.4			2.2			2.2			2.1									20.0
22.0	2.7	2.6		2.1	2.1		2.4	2.4		2.2	2.2		2.2			2.1			2.1			1.6			22.0
24.0	2.7	2.5		2.1	2.1		2.4	2.4		2.2	2.2		2.2	2.2		2.1	2.1		2.1	2.1		1.6			24.0
26.0	2.7	2.3		2.1	2.1		2.4	2.3		2.2	2.2		2.2	2.2		2.1	2.1		2.1	2.1		1.6	1.6		26.0
28.0	2.7	2.2		2.1	2.1		2.4	2.2		2.2	2.2		2.2	2.2		2.1	2.1		2.1	2.1		1.6	1.6		28.0
30.0	2.7	2.1	1.6	2.1	2.1		2.4	2.1		2.2	2.1		2.2	2.1		2.1	2.1		2.1	2.1		1.6	1.6		30.0
32.0	2.6	2.0	1.5	2.1	2.0	1.5	2.4	2.0	1.5	2.2	2.0	1.5	2.2	2.0		2.1	2.0		2.1	2.0		1.6	1.6		32.0
34.0	2.5	1.9	1.4	2.1	1.9	1.4	2.4	1.9	1.5	2.2	1.9	1.4	2.2	1.9	1.4	2.1	1.9	1.4	2.1	1.9	1.4	1.6	1.6		34.0
36.0	2.3	1.8	1.4	2.1	1.8	1.4	2.2	1.8	1.4	2.2	1.8	1.4	2.2	1.9	1.4	2.1	1.8	1.4	2.1	1.9	1.4	1.6	1.6	1.2	36.0
38.0	1.9	1.7	1.3	2.1	1.7	1.3	1.8	1.8	1.4	2.2	1.8	1.4	1.8	1.8	1.4	2.1	1.8	1.4	1.9	1.8	1.4		1.6	1.2	38.0
40.0	1.5	1.7	1.3	2.0	1.6	1.3	1.5	1.7	1.3	1.8	1.7	1.3	1.5	1.7	1.3	1.8	1.7	1.3	1.5	1.7	1.3		1.6	1.2	40.0
44.0		1.5	1.2	1.8	1.5	1.2		1.4	1.2		1.5	1.2		1.5	1.2		1.6	1.2		1.5	1.2			1.1	44.0
48.0			1.2	1.3	1.4	1.2			1.2			1.2			1.2			1.2			1.2				48.0
52.0					1.2	1.1												1.1							52.0
56.0																									56.0
60.0																									60.0
64.0																									64.0
68.0																									68.0
72.0																									72.0
1	92	92	92	0	0	0	92	92	92	46	46	46	92	92	92	46	46	46	92	92	92	100	100	100	1
2	92	92	92	46	46	46	92	92	92	92	92	92	92	92	92	92	92	92	92	92	92	100	100	100	2
3	46	46	46	92	92	92	92	92	92	92	92	92	92	92	92	92	92	92	92	92	92	100	100	100	3
4	46	46	46	92	92	92	46	46	46	92	92	92	92	92	92	92	92	92	92	92	92	100	100	100	4
5	46	46	46	92	92	92	46	46	46	46	46	46	46	46	46	92	92	92	92	92	92	100	100	100	5
ID	42	42	42	21	21	21	38	38	38	31	31	31	32	32	32	23	23	23	24	24	24	16	16	16	ID
[DEG]	62~81	64~85	65~85	56~81	57~85	61~85	64~81	67~85	68~85	65~81	67~85	68~85	67~81	69~85	70~85	67~81	69~85	67~85	69~81	71~85	73~85	73~81	76~85	77~85	[DEG]
	1	1	1	1	1	1	1	1	1	1	1	1	1	1	1	1	1	1	1	1	1	1	1	1	
	8.7t	8.7t	8.7t	8.7t	8.7t	8.7t	8.7t	8.7t	8.7t	8.7t	8.7t	8.7t	8.7t	8.7t	8.7t	8.7t	8.7t	8.7t	8.7t	8.7t	8.7t	8.7t	8.7t	8.7t	

油圧チルトジブ

HLJ	1.0m + 2.8m	15.4 t	8.0m x 7.5m	360 °	JPN

m	12.8	12.8	12.8	25.8	25.8	25.8	25.8	25.8	25.8	30.1	30.1	30.1	30.1	30.1	30.1	34.4	34.4	34.4	34.4	34.4	34.4	34.4	34.4	34.4	m
°	5	20	40	5	20	40	5	20	40	5	20	40	5	20	40	5	20	40	5	20	40	5	20	40	°
3.0		31.6	25.3																						3.0
3.5	38.1	30.3	24.6		31.4			25.0																	3.5
4.0	36.1	29.1	23.9		30.6	23.4		24.2						31.2											4.0
4.5	34.3	28.0	23.3		29.8	23.1		23.3	21.5		30.2			30.4											4.5
5.0	32.7	27.0	22.8		29.0	22.7		22.4	20.6		29.5	22.8		29.8	22.9		29.9			24.9			16.9		5.0
6.0	29.9	25.3	21.8		27.7	22.0		20.5	19.0		28.3	22.2		28.5	22.3		28.9	22.5		24.9	23.0		16.9	16.9	6.0
7.0	27.7	23.8	20.9		26.5	21.3		18.9	17.7		27.1	21.6		27.4	21.7		27.9	22.0		24.9	22.4		16.9	16.9	7.0
8.0	25.7	22.6	20.2	32.0	25.4	20.8	18.6	17.5	16.5		26.1	21.1		26.3	21.2		26.9	21.5		24.3	21.9		16.9	16.7	8.0
9.0	24.1	21.5		30.3	24.4	20.2	17.3	16.3	15.5	32.0	25.2	20.6	32.2	25.4	20.7		26.0	21.0		23.1	20.9		16.2	15.9	9.0
10.0	22.7	20.6		28.7	23.5	19.7	16.1	15.3	14.6	29.5	24.3	20.2	30.7	24.5	20.2		25.2	20.6	24.4	22.1	20.1		15.3	14.9	10.0
11.0	21.5	19.9		25.6	22.7	19.3	15.1	14.4	13.7	25.0	23.6	19.8	26.1	23.7	19.8	25.5	24.4	20.2	23.2	21.1	19.3	14.8	14.4	14.0	11.0
12.0	20.6	19.3		22.0	21.9	18.9	14.2	13.6	13.0	21.4	21.8	19.4	22.5	22.9	19.4	21.9	22.3	19.8	22.1	20.2	18.6	13.9	13.5	13.2	12.0
14.0				16.8	17.1	17.3	12.6	12.2	11.8	16.2	16.6	16.9	17.3	17.6	17.8	16.7	17.1	17.4	18.0	18.3	17.4	12.3	12.1	11.8	14.0
16.0				13.0	13.3	13.5	11.4	11.1	10.8	12.5	12.7	13.0	13.5	13.7	14.0	13.0	13.2	13.5	14.2	14.4	14.7	11.1	10.9	10.6	16.0
18.0				10.3	10.5		10.3	10.0		9.8	10.0	10.2	10.8	11.0	11.1	10.3	10.5	10.7	11.4	11.6	11.8	9.9	9.8	9.7	18.0
20.0				8.3	8.4		9.3	9.2		7.7	7.9		8.7	8.9		8.2	8.4	8.5	9.4	9.5	9.6	8.9	8.8	8.8	20.0
22.0				6.7	6.8		8.5	8.4		6.2	6.3		7.1	7.2		6.6	6.8		7.7	7.8		8.1	8.0		22.0
24.0				5.4			7.6			4.9	5.0		5.8	5.9		5.3	5.4		6.4	6.5		7.4	7.3		24.0
26.0										3.9	3.9		4.8	4.8		4.3	4.4		5.3	5.4		6.7	6.7		26.0
28.0										3.0			3.9			3.4	3.5		4.5	4.5		5.8	5.8		28.0
30.0																2.7			3.7			5.0			30.0
32.0																1.9			3.1			4.3			32.0
34.0																									34.0
36.0																									36.0
38.0																									38.0
40.0																									40.0
44.0																									44.0
48.0																									48.0
52.0																									52.0
56.0																									56.0
60.0																									60.0
64.0																									64.0
68.0																									68.0
72.0																									72.0
1	0	0	0	46	46	46	0	0	0	92	92	92	46	46	46	92	92	92	46	46	46	0	0	0	1
2	0	0	0	46	46	46	0	0	0	46	46	46	46	46	46	46	46	46	46	46	46	0	0	0	2
3	0	0	0	46	46	46	0	0	0	46	46	46	46	46	46	46	46	46	46	46	46	46	46	46	3
4	0	0	0	0	0	0	46	46	46	0	0	0	46	46	46	46	46	46	46	46	46	92	92	92	4
5	0	0	0	0	0	0	92	92	92	0	0	0	0	0	0	0	0	0	46	46	46	92	92	92	5
ID	1	1	1	66	66	66	17	17	17	67	67	67	54	54	54	55	55	55	49	49	49	19	19	19	ID
[DEG]	0~76	34~85	58~85	28~76	37~85	56~85	29~76	38~85	57~85	28~76	36~85	58~85	28~76	36~85	58~85	28~76	40~85	58~85	28~76	41~85	59~85	28~76	41~85	59~85	[DEG]
	5	5	5	4	4	4	3	3	3	4	4	4	4	4	4	4	4	4	3	3	3	2	2	2	
	60t	60t	60t	60t	60t	60t	26t	26t	26t	60t	60t	60t	60t	60t	60t	60t	60t	60t	26t	26t	26t	26t	26t	26t	

m	43.0	43.0	43.0	43.0	43.0	43.0	47.4	47.4	47.4	47.4	47.4	47.4	51.7	51.7	51.7	51.7	51.7	51.7	56.0	56.0	56.0	60.0	60.0	60.0	m
°	5	20	40	5	20	40	5	20	40	5	20	40	5	20	40	5	20	40	5	20	40	5	20	40	°
3.0																									3.0
3.5																									3.5
4.0																									4.0
4.5																									4.5
5.0																									5.0
6.0																									6.0
7.0		17.1	17.1		12.1	12.1		13.9			12.4														7.0
8.0		17.1	17.1		12.1	12.1		13.9	13.9		12.4	12.4		11.1			9.8								8.0
9.0		17.1	17.1		12.1	12.1		13.9	13.9		12.4	12.4		11.1	11.1		9.8	9.8		9.0	9.0		7.8		9.0
10.0		17.1	17.1		12.1	12.1		13.9	13.9		12.4	12.4		11.1	11.1		9.8	9.8		9.0	9.0		7.8	7.8	10.0
11.0		17.1	17.1		12.1	12.1		13.9	13.9		12.4	12.4		11.1	11.1		9.8	9.8		9.0	9.0		7.8	7.8	11.0
12.0		17.1	17.1		12.1	12.1		13.9	13.9		12.4	12.4		11.1	11.1		9.8	9.8		9.0	9.0		7.8	7.8	12.0
14.0	17.1	17.1	17.1	12.1	12.1	12.1		13.9	13.9		12.4	12.4		11.1	11.1		9.8	9.8		9.0	9.0		7.8	7.8	14.0
16.0	13.6	13.9	14.2	11.5	11.4	11.2	13.8	13.9	13.9	12.4	12.4	12.4	11.1	11.1	11.1	9.8	9.8	9.8		9.0	9.0		7.8	7.8	16.0
18.0	10.9	11.1	11.3	10.4	10.3	10.2	11.0	11.2	11.4	11.7	11.9	11.8	11.1	11.1	11.1	9.8	9.8	9.8	9.0	9.0	9.0		7.8	7.8	18.0
20.0	8.8	9.0	9.2	9.5	9.4	9.3	8.9	9.1	9.3	9.6	9.8	9.9	9.2	9.3	9.5	9.8	9.8	9.8	9.0	9.0	9.0	7.8	7.8	7.8	20.0
22.0	7.2	7.3	7.5	8.7	8.6	8.5	7.3	7.5	7.6	8.0	8.1	8.2	7.5	7.7	7.8	8.2	8.4	8.5	7.8	8.0	8.1	7.8	7.8	7.8	22.0
24.0	5.9	6.0	6.1	7.5	7.6	7.7	6.0	6.1	6.3	6.6	6.8	6.9	6.2	6.4	6.5	6.9	7.0	7.2	6.5	6.6	6.8	6.5	6.6	6.8	24.0
26.0	4.8	4.9	5.0	6.4	6.5	6.6	4.9	5.1	5.2	5.6	5.7	5.8	5.1	5.3	5.4	5.8	5.9	6.0	5.4	5.6	5.7	5.4	5.5	5.7	26.0
28.0	3.9	4.0		5.5	5.6		4.0	4.1	4.2	4.7	4.8	4.8	4.3	4.4	4.5	4.9	5.0	5.1	4.5	4.6	4.7	4.5	4.6	4.7	28.0
30.0	3.2	3.3		4.7	4.8		3.3	3.4		3.9	4.0		3.5	3.6	3.7	4.2	4.3	4.3	3.8	3.9	4.0	3.8	3.9	4.0	30.0
32.0	2.5	2.6		4.1	4.1		2.6	2.7		3.2	3.3		2.9	2.9		3.5	3.6		3.1	3.2	3.3	3.1	3.2	3.3	32.0
34.0	1.8	1.9		3.5	3.5		1.9	2.0		2.7	2.7		2.2	2.3		2.9	3.0		2.5	2.6		2.5	2.6	2.7	34.0
36.0	1.2	1.3		3.0	3.0		1.4	1.4		2.1	2.1		1.6	1.7		2.4	2.5		1.9	2.0		1.9	2.0		36.0
38.0				2.5						1.6	1.6		1.1	1.2		1.9	1.9		1.4	1.5		1.4	1.5		38.0
40.0				2.1						1.1	1.2					1.4	1.5		1.0	1.0			1.0		40.0
44.0																									44.0
48.0																									48.0
52.0																									52.0
56.0																									56.0
60.0																									60.0
64.0																									64.0
68.0																									68.0
72.0																									72.0
1	92	92	92	0	0	0	92	92	92	46	46	46	92	92	92	46	46	46	92	92	92	100	100	100	1
2	92	92	92	46	46	46	92	92	92	92	92	92	92	92	92	92	92	92	92	92	92	100	100	100	2
3	46	46	46	92	92	92	92	92	92	92	92	92	92	92	92	92	92	92	92	92	92	100	100	100	3
4	46	46	46	92	92	92	46	46	46	92	92	92	92	92	92	92	92	92	92	92	92	100	100	100	4
5	46	46	46	92	92	92	46	46	46	46	46	46	46	46	46	92	92	92	92	92	92	100	100	100	5
ID	42	42	42	21	21	21	38	38	38	31	31	31	32	32	32	23	23	23	24	24	24	16	16	16	ID
[DEG]	38~76	38~85	57~85	28~76	39~85	58~85	44~76	45~85	58~85	37~76	37~85	58~85	47~76	47~85	59~85	43~76	44~85	59~85	48~76	49~85	60~85	55~76	53~85	61~85	[DEG]
	2	2	2	2	2	2	2	2	2	2	2	2	2	2	2	2	2	2	2	2	2	2	2	2	
	26t	26t	26t	26t	26t	26t	26t	26t	26t	26t	26t	26t	26t	26t	26t	26t	26t	26t	26t	26t	26t	26t	26t	26t	

HLJ	1.0m + 9.2m	15.4 t	8.0m x 7.5m	360 °	JPN

m	12.8	12.8	12.8	25.8	25.8	25.8	25.8	25.8	25.8	30.1	30.1	30.1	30.1	30.1	30.1	34.4	34.4	34.4	34.4	34.4	34.4	34.4	34.4	34.4	m
°	5	20	40	5	20	40	5	20	40	5	20	40	5	20	40	5	20	40	5	20	40	5	20	40	°
3.0																									3.0
3.5																									3.5
4.0	15.0																								4.0
4.5	15.0																								4.5
5.0	15.0	13.5																							5.0
6.0	15.0	12.4			14.4			14.1																	6.0
7.0	14.8	11.4	8.9	15.0	13.5		14.3	13.3			13.6			13.8			13.8			13.4					7.0
8.0	13.4	10.6	8.4	15.0	12.8		14.3	12.5		15.0	12.9		15.0	13.1			13.2			13.3			10.1		8.0
9.0	12.2	9.9	8.0	15.0	12.1	8.7	14.0	11.9	8.6	15.0	12.3	8.8	15.0	12.5	8.8	15.0	12.6		13.4	12.7			10.1		9.0
10.0	11.2	9.2	7.6	15.0	11.5	8.4	13.2	11.3	8.4	15.0	11.8	8.5	15.0	11.9	8.6	15.0	12.1	8.6	13.4	12.2	8.6	10.1	10.1		10.0
11.0	10.4	8.7	7.3	15.0	10.9	8.2	12.5	10.8	8.1	15.0	11.3	8.3	15.0	11.4	8.3	15.0	11.6	8.4	13.4	11.7	8.4	10.1	10.1	8.3	11.0
12.0	9.6	8.2	7.0	14.2	10.4	7.9	11.7	10.3	7.9	15.0	10.8	8.1	15.0	10.9	8.1	15.0	11.1	8.2	13.4	11.2	8.2	10.1	10.1	8.1	12.0
14.0	8.4	7.4	6.5	12.6	9.6	7.5	10.3	9.4	7.4	13.5	10.0	7.7	13.7	10.1	7.7	14.4	10.3	7.8	13.4	10.4	7.8	10.1	9.9	7.8	14.0
16.0	7.5	6.8		11.3	8.9	7.1	9.1	8.4	7.1	12.2	9.3	7.3	12.3	9.3	7.3	13.1	9.7	7.5	13.2	9.7	7.5	9.7	9.2	7.4	16.0
18.0	6.8			10.2	8.3	6.8	8.1	7.6	6.8	10.8	8.7	7.0	11.2	8.7	7.0	11.0	9.1	7.2	12.0	9.1	7.2	8.7	8.4	7.1	18.0
20.0				9.3	7.7	6.5	7.3	6.9	6.5	8.7	8.2	6.7	9.6	8.2	6.8	9.0	8.6	6.9	9.9	8.6	6.9	7.8	7.6	6.9	20.0
22.0				7.8	7.3	6.3	6.7	6.3	6.1	7.1	7.7	6.5	8.0	7.8	6.5	7.4	7.9	6.7	8.3	8.2	6.7	7.1	6.9	6.7	22.0
24.0				6.5	6.8		6.1	5.8		5.8	6.3	6.3	6.7	7.1	6.3	6.1	6.6	6.5	7.0	7.4	6.5	6.4	6.3	6.2	24.0
26.0				5.4	5.7		5.6	5.4		4.8	5.2		5.6	5.9		5.0	5.4	5.9	5.9	6.3	6.3	5.9	5.8	5.7	26.0
28.0				4.5	4.8		5.2	5.0		3.9	4.2		4.7	5.0		4.1	4.5		5.0	5.3		5.4	5.3		28.0
30.0				3.8			4.8			3.2	3.4		4.0	4.2		3.4	3.7		4.2	4.5		5.0	4.9		30.0
32.0										2.5	2.7		3.3	3.5		2.8	3.0		3.6	3.8		4.6	4.6		32.0
34.0										1.9			2.8			2.2	2.4		3.0	3.2		4.1	4.2		34.0
36.0																1.6			2.5			3.6			36.0
38.0																1.1			2.1			3.2			38.0
40.0																									40.0
44.0																									44.0
48.0																									48.0
52.0																									52.0
56.0																									56.0
60.0																									60.0
64.0																									64.0
68.0																									68.0
72.0																									72.0
1	0	0	0	46	46	46	0	0	0	92	92	92	46	46	46	92	92	92	46	46	46	0	0	0	1
2	0	0	0	46	46	46	0	0	0	46	46	46	46	46	46	46	46	46	46	46	46	0	0	0	2
3	0	0	0	46	46	46	0	0	0	46	46	46	46	46	46	46	46	46	46	46	46	46	46	46	3
4	0	0	0	0	0	0	46	46	46	0	0	0	46	46	46	46	46	46	46	46	46	92	92	92	4
5	0	0	0	0	0	0	92	92	92	0	0	0	0	0	0	0	0	0	46	46	46	92	92	92	5
ID	1	1	1	66	66	66	17	17	17	67	67	67	54	54	54	55	55	55	49	49	49	19	19	19	ID
[DEG]	0~79	44~85	57~85	27~79	37~85	56~85	28~79	38~85	57~85	27~79	36~85	58~85	27~79	36~85	57~85	26~79	40~85	58~85	27~79	40~85	59~85	28~79	41~85	59~85	[DEG]
	2	2	2	2	2	2	2	2	2	2	2	2	2	2	2	2	2	2	2	2	2	2	2	2	
	26t	26t	26t	26t	26t	26t	26t	26t	26t	26t	26t	26t	26t	26t	26t	26t	26t	26t	26t	26t	26t	26t	26t	26t	

m	43.0	43.0	43.0	43.0	43.0	43.0	47.4	47.4	47.4	47.4	47.4	47.4	51.7	51.7	51.7	51.7	51.7	51.7	56.0	56.0	56.0	60.0	60.0	60.0	m
°	5	20	40	5	20	40	5	20	40	5	20	40	5	20	40	5	20	40	5	20	40	5	20	40	°
3.0																									3.0
3.5																									3.5
4.0																									4.0
4.5																									4.5
5.0																									5.0
6.0																									6.0
7.0																									7.0
8.0																									8.0
9.0		10.6			7.2																				9.0
10.0		10.6			7.2			8.4			7.5														10.0
11.0		10.6			7.2			8.4			7.5			7.0			6.4			6.4					11.0
12.0	10.6	10.6	8.3	7.2	7.2	7.2		8.4			7.5			7.0			6.4			6.4			5.7		12.0
14.0	10.6	10.6	7.9	7.2	7.2	7.2	8.4	8.4	8.0	7.5	7.5	7.5		7.0	7.0	6.4	6.4	6.4		6.4			5.7		14.0
16.0	10.6	10.2	7.6	7.2	7.2	7.2	8.4	8.4	7.7	7.5	7.5	7.5	7.0	7.0	7.0	6.4	6.4	6.4	6.4	6.4	6.4		5.7	5.7	16.0
18.0	10.6	9.6	7.4	7.2	7.2	7.2	8.4	8.4	7.4	7.5	7.5	7.5	7.0	7.0	7.0	6.4	6.4	6.4	6.4	6.4	6.4	5.7	5.7	5.7	18.0
20.0	9.2	9.2	7.1	7.2	7.2	7.1	8.4	8.4	7.2	7.5	7.5	7.2	7.0	7.0	7.0	6.4	6.4	6.4	6.4	6.4	6.4	5.7	5.7	5.7	20.0
22.0	7.6	8.1	6.9	7.2	7.2	6.9	7.8	8.3	7.0	7.5	7.5	7.0	7.0	7.0	7.0	6.4	6.4	6.4	6.4	6.4	6.4	5.7	5.7	5.7	22.0
24.0	6.3	6.8	6.7	7.2	7.0	6.7	6.5	7.0	6.8	7.0	7.5	6.8	6.6	7.0	6.9	6.4	6.4	6.4	6.4	6.4	6.4	5.7	5.7	5.5	24.0
26.0	5.2	5.6	6.1	6.8	6.6	6.4	5.4	5.8	6.3	5.9	6.4	6.7	5.5	6.0	6.5	6.1	6.4	6.4	5.7	6.2	6.4	5.5	5.4	5.2	26.0
28.0	4.3	4.7	5.1	5.8	6.1	6.0	4.5	4.9	5.3	5.0	5.4	5.8	4.6	5.0	5.5	5.2	5.6	6.0	4.8	5.2	5.7	4.8	5.1	4.9	28.0
30.0	3.6	3.9	4.3	5.1	5.3	5.6	3.7	4.1	4.5	4.3	4.6	4.9	3.9	4.2	4.6	4.5	4.8	5.1	4.1	4.4	4.8	4.0	4.4	4.6	30.0
32.0	2.9	3.2	3.5	4.4	4.6	4.9	3.1	3.4	3.7	3.6	3.9	4.2	3.2	3.5	3.9	3.8	4.1	4.4	3.4	3.7	4.1	3.4	3.7	4.1	32.0
34.0	2.4	2.6		3.8	4.0		2.5	2.8	3.1	3.0	3.3	3.6	2.6	2.9	3.2	3.2	3.5	3.8	2.9	3.1	3.5	2.8	3.1	3.4	34.0
36.0	1.8	2.1		3.3	3.5		2.0	2.3		2.5	2.8		2.2	2.4	2.7	2.7	3.0	3.2	2.4	2.6	2.9	2.3	2.6	2.9	36.0
38.0	1.3	1.6		2.9	3.0		1.5	1.8		2.1	2.3		1.7	2.0		2.3	2.5		1.9	2.2	2.4	1.9	2.1	2.4	38.0
40.0		1.1		2.5	2.6			1.3		1.7	1.9		1.2	1.5		1.9	2.1		1.4	1.7		1.4	1.7	2.0	40.0
44.0				1.8							1.1					1.1	1.3								44.0
48.0				1.2																					48.0
52.0																									52.0
56.0																									56.0
60.0																									60.0
64.0																									64.0
68.0																									68.0
72.0																									72.0
1	92	92	92	0	0	0	92	92	92	46	46	46	92	92	92	46	46	46	92	92	92	100	100	100	1
2	92	92	92	46	46	46	92	92	92	92	92	92	92	92	92	92	92	92	92	92	92	100	100	100	2
3	46	46	46	92	92	92	92	92	92	92	92	92	92	92	92	92	92	92	92	92	92	100	100	100	3
4	46	46	46	92	92	92	46	46	46	92	92	92	92	92	92	92	92	92	92	92	92	100	100	100	4
5	46	46	46	92	92	92	46	46	46	46	46	46	46	46	46	92	92	92	92	92	92	100	100	100	5
ID	42	42	42	21	21	21	38	38	38	31	31	31	32	32	32	23	23	23	24	24	24	16	16	16	ID
[DEG]	43~79	42~85	57~85	21~79	43~85	58~85	48~79	48~85	58~85	46~79	41~85	59~85	50~79	52~85	59~85	45~79	47~85	60~85	54~79	56~85	60~85	57~79	59~85	61~85	[DEG]
	2	2	2	1	1	1	1	1	1	1	1	1	1	1	1	1	1	1	1	1	1	1	1	1	
	26t	26t	26t	8.7t	8.7t	8.7t	8.7t	8.7t	8.7t	8.7t	8.7t	8.7t	8.7t	8.7t	8.7t	8.7t	8.7t	8.7t	8.7t	8.7t	8.7t	8.7t	8.7t	8.7t	

油圧チルトジブ

HLJ	1.0m + 17.0m	15.4 t	8.0m x 7.5m	360 °	JPN

m	12.8	12.8	12.8	25.8	25.8	25.8	25.8	25.8	25.8	30.1	30.1	30.1	30.1	30.1	30.1	34.4	34.4	34.4	34.4	34.4	34.4	34.4	34.4	34.4	m
°	5	20	40	5	20	40	5	20	40	5	20	40	5	20	40	5	20	40	5	20	40	5	20	40	°
3.0																									3.0
3.5																									3.5
4.0																									4.0
4.5																									4.5
5.0																									5.0
6.0	7.3																								6.0
7.0	6.8																								7.0
8.0	6.4	5.4		7.0			5.6																		8.0
9.0	6.0	5.1		6.7			5.6			6.7			6.5												9.0
10.0	5.7	4.8		6.4	5.0		5.6	4.8		6.5			6.3			6.3			5.9			4.6			10.0
11.0	5.3	4.6		6.1	4.8		5.6	4.6		6.2	4.9		6.1	4.8		6.1	4.8		5.9	4.7		4.6			11.0
12.0	5.1	4.4		5.8	4.7		5.5	4.5		6.0	4.7		5.9	4.6		5.9	4.7		5.7	4.6		4.6	4.4		12.0
14.0	4.6	4.0	3.5	5.4	4.4		5.1	4.2		5.5	4.4		5.4	4.4		5.5	4.4		5.4	4.3		4.6	4.2		14.0
16.0	4.2	3.7	3.3	5.0	4.1	3.4	4.8	3.9	3.3	5.1	4.2	3.4	5.1	4.1	3.4	5.2	4.2	3.4	5.1	4.1		4.6	4.0		16.0
18.0	3.8	3.4	3.1	4.6	3.9	3.3	4.4	3.7	3.2	4.8	3.9	3.3	4.8	3.9	3.3	4.9	3.9	3.3	4.8	3.9	3.2	4.6	3.8	3.2	18.0
20.0	3.5	3.2	3.0	4.3	3.7	3.1	4.2	3.5	3.1	4.5	3.7	3.2	4.5	3.7	3.2	4.6	3.8	3.2	4.5	3.7	3.1	4.3	3.6	3.1	20.0
22.0	3.3	3.1	2.9	4.1	3.5	3.0	3.9	3.4	3.0	4.3	3.6	3.1	4.2	3.5	3.0	4.3	3.6	3.1	4.3	3.5	3.0	4.1	3.5	3.0	22.0
24.0	3.1	2.9		3.8	3.3	2.9	3.7	3.2	2.9	4.0	3.4	3.0	4.0	3.4	2.9	4.1	3.5	3.0	4.0	3.4	2.9	3.9	3.3	2.9	24.0
26.0	3.0			3.6	3.2	2.9	3.5	3.1	2.8	3.8	3.3	2.9	3.8	3.2	2.9	3.9	3.3	2.9	3.8	3.3	2.9	3.7	3.2	2.8	26.0
28.0				3.5	3.1	2.8	3.4	3.0	2.7	3.6	3.2	2.8	3.6	3.1	2.8	3.7	3.2	2.8	3.7	3.2	2.8	3.6	3.1	2.7	28.0
30.0				3.3	3.0		3.2	2.9		3.5	3.0	2.8	3.4	3.0	2.7	3.6	3.1	2.8	3.5	3.1	2.7	3.4	3.0	2.7	30.0
32.0				3.2	2.9		3.1	2.8		3.3	2.9	2.7	3.3	2.9	2.7	3.4	3.0	2.7	3.4	3.0	2.7	3.3	2.9	2.6	32.0
34.0				3.0	2.8		3.0	2.7		2.9	2.9		3.2	2.8		3.0	2.9	2.7	3.3	2.9	2.6	3.2	2.8	2.6	34.0
36.0				2.9	2.7		2.9	2.7		2.4	2.8		3.0	2.8		2.5	2.8		3.1	2.8		3.1	2.7		36.0
38.0				2.5			2.8			1.8	2.2		2.6	2.7		2.0	2.4		2.8	2.7		3.0	2.7		38.0
40.0										1.4			2.1			1.5	1.9		2.3	2.6		2.9	2.6		40.0
44.0																			1.5			2.5			44.0
48.0																									48.0
52.0																									52.0
56.0																									56.0
60.0																									60.0
64.0																									64.0
68.0																									68.0
72.0																									72.0
1	0	0	0	46	46	46	0	0	0	92	92	92	46	46	46	92	92	92	46	46	46	0	0	0	1
2	0	0	0	46	46	46	0	0	0	46	46	46	46	46	46	46	46	46	46	46	46	0	0	0	2
3	0	0	0	46	46	46	0	0	0	46	46	46	46	46	46	46	46	46	46	46	46	46	46	46	3
4	0	0	0	0	0	0	46	46	46	0	0	0	46	46	46	46	46	46	46	46	46	92	92	92	4
5	0	0	0	0	0	0	92	92	92	0	0	0	0	0	0	0	0	0	46	46	46	92	92	92	5
ID	1	1	1	66	66	66	17	17	17	67	67	67	54	54	54	55	55	55	49	49	49	19	19	19	ID
[DEG]	0~81	41~85	56~85	25~81	36~85	59~85	26~81	37~85	60~85	31~81	40~85	57~85	31~81	40~85	57~85	39~81	43~85	58~85	31~81	43~85	58~85	32~81	44~85	58~85	[DEG]
	1	1	1	1	1	1	1	1	1	1	1	1	1	1	1	1	1	1	1	1	1	1	1	1	
	8.7t	8.7t	8.7t	8.7t	8.7t	8.7t	8.7t	8.7t	8.7t	8.7t	8.7t	8.7t	8.7t	8.7t	8.7t	8.7t	8.7t	8.7t	8.7t	8.7t	8.7t	8.7t	8.7t	8.7t	

m	43.0	43.0	43.0	43.0	43.0	43.0	47.4	47.4	47.4	47.4	47.4	47.4	51.7	51.7	51.7	51.7	51.7	51.7	56.0	56.0	56.0	60.0	60.0	60.0	m
°	5	20	40	5	20	40	5	20	40	5	20	40	5	20	40	5	20	40	5	20	40	5	20	40	°
3.0																									3.0
3.5																									3.5
4.0																									4.0
4.5																									4.5
5.0																									5.0
6.0																									6.0
7.0																									7.0
8.0																									8.0
9.0																									9.0
10.0																									10.0
11.0																									11.0
12.0	5.5			4.1																					12.0
14.0	5.4	4.3		4.1	4.1		4.7	4.2		4.3	4.2		4.1			3.9									14.0
16.0	5.1	4.1		4.1	3.9		4.7	4.1		4.3	4.0		4.1	4.0		3.9	3.9		3.9	3.8		3.6	3.6		16.0
18.0	4.8	3.9	3.2	4.1	3.8		4.7	3.9		4.3	3.8		4.1	3.8		3.9	3.7		3.9	3.7		3.6	3.6		18.0
20.0	4.6	3.8	3.1	4.1	3.6	3.1	4.6	3.7	3.1	4.3	3.7	3.1	4.1	3.7	3.1	3.9	3.6	3.0	3.9	3.6		3.6	3.5		20.0
22.0	4.4	3.6	3.0	4.1	3.5	3.0	4.4	3.6	3.0	4.3	3.5	3.0	4.1	3.5	3.0	3.9	3.5	2.9	3.9	3.5	2.9	3.6	3.4	2.9	22.0
24.0	4.2	3.5	3.0	4.0	3.3	2.9	4.2	3.5	2.9	4.1	3.4	2.9	4.1	3.4	2.9	3.9	3.4	2.9	3.9	3.3	2.9	3.6	3.3	2.8	24.0
26.0	4.0	3.3	2.9	3.8	3.2	2.8	4.0	3.3	2.9	3.9	3.3	2.8	4.0	3.3	2.8	3.8	3.2	2.8	3.8	3.2	2.8	3.6	3.2	2.8	26.0
28.0	3.8	3.2	2.8	3.7	3.1	2.7	3.9	3.2	2.8	3.8	3.2	2.8	3.8	3.2	2.8	3.7	3.1	2.7	3.7	3.1	2.7	3.6	3.1	2.7	28.0
30.0	3.7	3.1	2.8	3.5	3.0	2.7	3.7	3.1	2.7	3.6	3.1	2.7	3.7	3.1	2.7	3.6	3.1	2.7	3.6	3.1	2.7	3.5	3.0	2.6	30.0
32.0	3.5	3.0	2.7	3.4	2.9	2.6	3.6	3.0	2.7	3.5	3.0	2.7	3.5	3.0	2.7	3.5	3.0	2.6	3.5	3.0	2.6	3.4	2.9	2.6	32.0
34.0	3.0	2.9	2.6	3.3	2.9	2.6	3.0	3.0	2.6	3.4	2.9	2.6	3.1	2.9	2.6	3.4	2.9	2.6	3.2	2.9	2.6	3.2	2.9	2.5	34.0
36.0	2.5	2.9	2.6	3.2	2.8	2.5	2.5	2.9	2.6	3.0	2.8	2.6	2.6	2.9	2.6	3.1	2.8	2.5	2.7	2.8	2.5	2.6	2.8	2.5	36.0
38.0	2.0	2.5	2.6	3.1	2.7	2.5	1.9	2.5	2.5	2.5	2.8	2.5	2.0	2.5	2.5	2.6	2.7	2.5	2.2	2.7	2.5	2.1	2.6	2.5	38.0
40.0	1.5	1.9		2.8	2.6		1.5	1.9	2.4	2.0	2.4	2.5	1.5	2.0	2.5	2.2	2.6	2.4	1.7	2.2	2.4	1.6	2.1	2.4	40.0
44.0		1.1		2.0	2.3			1.1		1.2	1.6			1.2	1.6	1.4	1.7	2.1		1.3	1.7		1.3	1.7	44.0
48.0				1.4	1.6												1.0								48.0
52.0																									52.0
56.0																									56.0
60.0																									60.0
64.0																									64.0
68.0																									68.0
72.0																									72.0
1	92	92	92	0	0	0	92	92	92	46	46	46	92	92	92	46	46	46	92	92	92	100	100	100	1
2	92	92	92	46	46	46	92	92	92	92	92	92	92	92	92	92	92	92	92	92	92	100	100	100	2
3	46	46	46	92	92	92	92	92	92	92	92	92	92	92	92	92	92	92	92	92	92	100	100	100	3
4	46	46	46	92	92	92	46	46	46	92	92	92	92	92	92	92	92	92	92	92	92	100	100	100	4
5	46	46	46	92	92	92	46	46	46	46	46	46	46	46	46	92	92	92	92	92	92	100	100	100	5
ID	42	42	42	21	21	21	38	38	38	31	31	31	32	32	32	23	23	23	24	24	24	16	16	16	ID
[DEG]	50~81	48~85	60~85	39~81	42~85	60~85	54~81	52~85	61~85	49~81	52~85	61~85	57~81	56~85	59~85	53~81	51~85	59~85	60~81	59~85	62~85	62~81	62~85	65~85	[DEG]
	1	1	1	1	1	1	1	1	1	1	1	1	1	1	1	1	1	1	1	1	1	1	1	1	
	8.7t	8.7t	8.7t	8.7t	8.7t	8.7t	8.7t	8.7t	8.7t	8.7t	8.7t	8.7t	8.7t	8.7t	8.7t	8.7t	8.7t	8.7t	8.7t	8.7t	8.7t	8.7t	8.7t	8.7t	

HLJ	1.0m + 24.0m	15.4 t	8.0m x 7.5m	360 °	JPN

m	12.8	12.8	12.8	25.8	25.8	25.8	25.8	25.8	25.8	30.1	30.1	30.1	30.1	30.1	30.1	34.4	34.4	34.4	34.4	34.4	34.4	34.4	34.4	34.4	m
°	5	20	40	5	20	40	5	20	40	5	20	40	5	20	40	5	20	40	5	20	40	5	20	40	°
3.0																									3.0
3.5																									3.5
4.0																									4.0
4.5																									4.5
5.0																									5.0
6.0																									6.0
7.0																									7.0
8.0	5.1																								8.0
9.0	5.1																								9.0
10.0	5.1			4.9			3.7																		10.0
11.0	5.1			4.9			3.7			4.6			4.3												11.0
12.0	5.1	4.5		4.9			3.7			4.6			4.3			4.2			4.0			3.2			12.0
14.0	4.8	4.0		4.9	4.4		3.7	3.7		4.6	4.4		4.3	4.3		4.2			4.0			3.2			14.0
16.0	4.3	3.6		4.9	4.1		3.7	3.7		4.6	4.1		4.3	4.1		4.2	4.1		4.0	4.0		3.2	3.2		16.0
18.0	3.8	3.3		4.6	3.8		3.7	3.7		4.6	3.8		4.3	3.9		4.2	3.9		4.0	3.8		3.2	3.2		18.0
20.0	3.4	3.0	2.6	4.3	3.5		3.7	3.4		4.4	3.6		4.3	3.6		4.2	3.6		4.0	3.7		3.2	3.2		20.0
22.0	3.1	2.7	2.4	4.1	3.2	2.6	3.7	3.2	2.5	4.2	3.3	2.6	4.2	3.4	2.6	4.2	3.4	2.6	4.0	3.4		3.2	3.2		22.0
24.0	2.8	2.5	2.2	3.7	3.0	2.4	3.7	3.0	2.4	4.0	3.1	2.5	4.0	3.1	2.5	4.0	3.2	2.5	3.9	3.2	2.5	3.2	3.2	2.5	24.0
26.0	2.6	2.3	2.1	3.5	2.8	2.3	3.4	2.8	2.3	3.7	2.9	2.4	3.7	3.0	2.4	3.9	3.0	2.4	3.8	3.1	2.4	3.2	3.0	2.4	26.0
28.0	2.4	2.2	2.0	3.2	2.7	2.2	3.2	2.6	2.2	3.4	2.8	2.3	3.4	2.8	2.3	3.6	2.9	2.3	3.6	2.9	2.3	3.2	2.8	2.3	28.0
30.0	2.2	2.0		3.0	2.5	2.1	2.9	2.5	2.1	3.2	2.6	2.2	3.2	2.6	2.2	3.4	2.7	2.2	3.4	2.7	2.2	3.2	2.7	2.2	30.0
32.0	2.0	1.9		2.8	2.4	2.0	2.8	2.4	2.0	3.0	2.5	2.1	3.0	2.5	2.1	3.2	2.6	2.1	3.2	2.6	2.1	3.1	2.6	2.1	32.0
34.0				2.6	2.3	2.0	2.6	2.3	2.0	2.8	2.4	2.0	2.8	2.4	2.0	3.0	2.5	2.1	3.0	2.5	2.1	3.0	2.5	2.1	34.0
36.0				2.5	2.2	1.9	2.4	2.1	1.9	2.6	2.3	2.0	2.7	2.3	2.0	2.8	2.4	2.0	2.8	2.4	2.0	2.8	2.4	2.0	36.0
38.0				2.3	2.1		2.3	2.1		2.4	2.2	1.9	2.5	2.2	1.9	2.5	2.3	1.9	2.7	2.3	1.9	2.6	2.3	1.9	38.0
40.0				2.2	2.0		2.2	2.0		2.0	2.1		2.4	2.1		2.0	2.2	1.9	2.5	2.2	1.9	2.5	2.2	1.9	40.0
44.0				1.8			2.0			1.2	1.5		1.8	1.9		1.2	1.6		1.9	2.0		2.3	2.0		44.0
48.0													1.1						1.2	1.5		2.0	1.9		48.0
52.0																						1.6			52.0
56.0																									56.0
60.0																									60.0
64.0																									64.0
68.0																									68.0
72.0																									72.0
1	0	0	0	46	46	46	0	0	0	92	92	92	46	46	46	92	92	92	46	46	46	0	0	0	1
2	0	0	0	46	46	46	0	0	0	46	46	46	46	46	46	46	46	46	46	46	46	0	0	0	2
3	0	0	0	46	46	46	0	0	0	46	46	46	46	46	46	46	46	46	46	46	46	46	46	46	3
4	0	0	0	0	0	0	46	46	46	0	0	0	46	46	46	46	46	46	46	46	46	92	92	92	4
5	0	0	0	0	0	0	92	92	92	0	0	0	0	0	0	0	0	0	46	46	46	92	92	92	5
ID	1	1	1	66	66	66	17	17	17	67	67	67	54	54	54	55	55	55	49	49	49	19	19	19	ID
[DEG]	0~81	37~85	59~85	28~81	44~85	57~85	29~81	45~85	58~85	37~81	42~85	59~85	28~81	43~85	59~85	43~81	48~85	59~85	36~81	41~85	59~85	30~81	43~85	60~85	[DEG]
	1	1	1	1	1	1	1	1	1	1	1	1	1	1	1	1	1	1	1	1	1	1	1	1	
	8.7t	8.7t	8.7t	8.7t	8.7t	8.7t	8.7t	8.7t	8.7t	8.7t	8.7t	8.7t	8.7t	8.7t	8.7t	8.7t	8.7t	8.7t	8.7t	8.7t	8.7t	8.7t	8.7t	8.7t	

m	43.0	43.0	43.0	43.0	43.0	43.0	47.4	47.4	47.4	47.4	47.4	47.4	51.7	51.7	51.7	51.7	51.7	51.7	56.0	56.0	56.0	60.0	60.0	60.0	m
°	5	20	40	5	20	40	5	20	40	5	20	40	5	20	40	5	20	40	5	20	40	5	20	40	°
3.0																									3.0
3.5																									3.5
4.0																									4.0
4.5																									4.5
5.0																									5.0
6.0																									6.0
7.0																									7.0
8.0																									8.0
9.0																									9.0
10.0																									10.0
11.0																									11.0
12.0																									12.0
14.0	3.8			2.9																					14.0
16.0	3.8			2.9			3.3			3.1			3.0			2.9									16.0
18.0	3.8	3.8		2.9	2.9		3.3	3.3		3.1	3.1		3.0	3.0		2.9			2.9						18.0
20.0	3.8	3.6		2.9	2.9		3.3	3.3		3.1	3.1		3.0	3.0		2.9	2.9		2.9	2.9		2.4			20.0
22.0	3.8	3.5		2.9	2.9		3.3	3.3		3.1	3.1		3.0	3.0		2.9	2.9		2.9	2.9		2.4	2.4		22.0
24.0	3.8	3.3	2.5	2.9	2.9		3.3	3.3		3.1	3.1		3.0	3.0		2.9	2.9		2.9	2.9		2.4	2.4		24.0
26.0	3.8	3.2	2.4	2.9	2.9	2.4	3.3	3.2	2.4	3.1	3.1	2.4	3.0	3.0		2.9	2.9		2.9	2.9		2.4	2.4		26.0
28.0	3.7	3.0	2.3	2.9	2.9	2.3	3.3	3.0	2.3	3.1	3.0	2.3	3.0	3.0	2.3	2.9	2.9	2.3	2.9	2.9	2.3	2.4	2.4		28.0
30.0	3.5	2.9	2.3	2.9	2.8	2.2	3.3	2.9	2.3	3.1	2.9	2.3	3.0	2.9	2.3	2.9	2.9	2.3	2.9	2.9	2.3	2.4	2.4	2.0	30.0
32.0	3.4	2.8	2.2	2.9	2.7	2.2	3.3	2.8	2.2	3.1	2.8	2.2	3.0	2.8	2.2	2.9	2.8	2.2	2.9	2.8	2.2	2.4	2.4	2.0	32.0
34.0	3.3	2.6	2.1	2.9	2.6	2.1	3.3	2.7	2.1	3.1	2.7	2.1	3.0	2.7	2.2	2.9	2.7	2.2	2.9	2.8	2.2	2.4	2.4	1.9	34.0
36.0	2.8	2.5	2.1	2.9	2.5	2.1	2.8	2.6	2.1	3.1	2.6	2.1	2.8	2.6	2.1	2.9	2.6	2.1	2.9	2.7	2.1	2.4	2.4	1.9	36.0
38.0	2.4	2.4	2.0	2.9	2.4	2.0	2.3	2.5	2.0	2.7	2.5	2.0	2.3	2.5	2.0	2.8	2.5	2.1	2.4	2.6	2.1	2.4	2.3	1.9	38.0
40.0	1.9	2.3	2.0	2.8	2.3	2.0	1.8	2.4	2.0	2.3	2.4	2.0	1.9	2.4	2.0	2.4	2.4	2.0	2.0	2.5	2.0	1.9	2.3	1.8	40.0
44.0	1.1	1.6	1.9	2.3	2.2	1.9		1.6	1.9	1.5	2.0	1.9		1.6	1.9	1.6	2.1	1.9	1.2	1.7	1.9		1.6	1.7	44.0
48.0				1.6	1.9				1.3		1.3	1.7			1.4		1.4	1.8			1.5			1.4	48.0
52.0				1.1	1.3																				52.0
56.0																									56.0
60.0																									60.0
64.0																									64.0
68.0																									68.0
72.0																									72.0
1	92	92	92	0	0	0	92	92	92	46	46	46	92	92	92	46	46	46	92	92	92	100	100	100	1
2	92	92	92	46	46	46	92	92	92	92	92	92	92	92	92	92	92	92	92	92	92	100	100	100	2
3	46	46	46	92	92	92	92	92	92	92	92	92	92	92	92	92	92	92	92	92	92	100	100	100	3
4	46	46	46	92	92	92	46	46	46	92	92	92	92	92	92	92	92	92	92	92	92	100	100	100	4
5	46	46	46	92	92	92	46	46	46	46	46	46	46	46	46	92	92	92	92	92	92	100	100	100	5
ID	42	42	42	21	21	21	38	38	38	31	31	31	32	32	32	23	23	23	24	24	24	16	16	16	ID
[DEG]	52~81	57~85	61~85	43~81	47~85	62~85	60~81	60~85	60~85	56~81	56~85	60~85	63~81	63~85	63~85	59~81	59~85	63~85	61~81	66~85	66~85	67~81	68~85	68~85	[DEG]
	1	1	1	1	1	1	1	1	1	1	1	1	1	1	1	1	1	1	1	1	1	1	1	1	
	8.7t	8.7t	8.7t	8.7t	8.7t	8.7t	8.7t	8.7t	8.7t	8.7t	8.7t	8.7t	8.7t	8.7t	8.7t	8.7t	8.7t	8.7t	8.7t	8.7t	8.7t	8.7t	8.7t	8.7t	

油圧チルトジブ

HLJ	1.0m + 31.0m	15.4 t	8.0m x 7.5m	360 °	JPN

m	12.8	12.8	12.8	25.8	25.8	25.8	25.8	25.8	25.8	30.1	30.1	30.1	30.1	30.1	30.1	34.4	34.4	34.4	34.4	34.4	34.4	34.4	34.4	34.4	m
°	5	20	40	5	20	40	5	20	40	5	20	40	5	20	40	5	20	40	5	20	40	5	20	40	°
3.0																									3.0
3.5																									3.5
4.0																									4.0
4.5																									4.5
5.0																									5.0
6.0																									6.0
7.0																									7.0
8.0																									8.0
9.0																									9.0
10.0	3.5																								10.0
11.0	3.5																								11.0
12.0	3.5			3.3			2.6																		12.0
14.0	3.5			3.3			2.6			3.1			2.9			2.9			2.8			2.3			14.0
16.0	3.5	3.0		3.3			2.6			3.1			2.9			2.9			2.8			2.3			16.0
18.0	3.2	2.7		3.3	3.0		2.6	2.6		3.1	3.0		2.9	2.9		2.9			2.8			2.3			18.0
20.0	2.9	2.5		3.3	2.7		2.6	2.6		3.1	2.8		2.9	2.8		2.9	2.8		2.8	2.8		2.3	2.3		20.0
22.0	2.6	2.2		3.3	2.5		2.6	2.5		3.1	2.6		2.9	2.6		2.9	2.6		2.8	2.6		2.3	2.3		22.0
24.0	2.3	2.0	1.7	3.0	2.3		2.6	2.3		3.1	2.4		2.9	2.4		2.9	2.4		2.8	2.4		2.3	2.3		24.0
26.0	2.1	1.9	1.6	2.7	2.2	1.7	2.6	2.1		2.9	2.2		2.9	2.2		2.9	2.3		2.8	2.3		2.3	2.2		26.0
28.0	1.9	1.7	1.5	2.5	2.0	1.6	2.5	2.0	1.6	2.7	2.1	1.6	2.7	2.1	1.6	2.8	2.2	1.6	2.8	2.2		2.3	2.1		28.0
30.0	1.7	1.6	1.4	2.3	1.9	1.5	2.3	1.9	1.5	2.5	2.0	1.5	2.5	2.0	1.5	2.6	2.0	1.6	2.6	2.0	1.6	2.3	2.0	1.5	30.0
32.0	1.6	1.5	1.3	2.2	1.8	1.4	2.1	1.8	1.4	2.3	1.9	1.5	2.3	1.9	1.5	2.4	1.9	1.5	2.4	1.9	1.5	2.3	1.9	1.5	32.0
34.0	1.5	1.4	1.2	2.0	1.7	1.4	2.0	1.7	1.4	2.1	1.7	1.4	2.2	1.8	1.4	2.3	1.8	1.4	2.3	1.8	1.4	2.2	1.8	1.4	34.0
36.0	1.4	1.3	1.2	1.9	1.6	1.3	1.8	1.6	1.3	2.0	1.7	1.3	2.0	1.7	1.3	2.1	1.7	1.4	2.1	1.7	1.4	2.1	1.7	1.4	36.0
38.0	1.3	1.2		1.7	1.5	1.3	1.7	1.5	1.3	1.9	1.6	1.3	1.9	1.6	1.3	2.0	1.6	1.3	2.0	1.6	1.3	2.0	1.6	1.3	38.0
40.0	1.2			1.6	1.4	1.2	1.6	1.4	1.2	1.8	1.5	1.2	1.8	1.5	1.2	1.9	1.6	1.3	1.9	1.6	1.3	1.9	1.5	1.3	40.0
44.0				1.4	1.3		1.4	1.3		1.6	1.3	1.2	1.6	1.3	1.2	1.6	1.4	1.2	1.7	1.4	1.2	1.6	1.4	1.2	44.0
48.0				1.3	1.2		1.3	1.2			1.2		1.4	1.2			1.3	1.1	1.5	1.3	1.1	1.5	1.3	1.1	48.0
52.0							1.1							1.1						1.2		1.3	1.2		52.0
56.0																						1.2	1.1		56.0
60.0																									60.0
64.0																									64.0
68.0																									68.0
72.0																									72.0
1	0	0	0	46	46	46	0	0	0	92	92	92	46	46	46	92	92	92	46	46	46	0	0	0	1
2	0	0	0	46	46	46	0	0	0	46	46	46	46	46	46	46	46	46	46	46	46	0	0	0	2
3	0	0	0	46	46	46	0	0	0	46	46	46	46	46	46	46	46	46	46	46	46	46	46	46	3
4	0	0	0	0	0	0	46	46	46	0	0	0	46	46	46	46	46	46	46	46	46	92	92	92	4
5	0	0	0	0	0	0	92	92	92	0	0	0	0	0	0	0	0	0	46	46	46	92	92	92	5
ID	1	1	1	66	66	66	17	17	17	67	67	67	54	54	54	55	55	55	49	49	49	19	19	19	ID
[DEG]	0~81	40~85	56~85	35~81	41~85	63~85	26~81	42~85	64~85	48~81	48~85	60~85	42~81	40~85	60~85	52~81	53~85	58~85	47~81	47~85	58~85	36~81	41~85	59~85	[DEG]
	1	1	1	1	1	1	1	1	1	1	1	1	1	1	1	1	1	1	1	1	1	1	1	1	
	8.7t	8.7t	8.7t	8.7t	8.7t	8.7t	8.7t	8.7t	8.7t	8.7t	8.7t	8.7t	8.7t	8.7t	8.7t	8.7t	8.7t	8.7t	8.7t	8.7t	8.7t	8.7t	8.7t	8.7t	

m	43.0	43.0	43.0	43.0	43.0	43.0	47.4	47.4	47.4	47.4	47.4	47.4	51.7	51.7	51.7	51.7	51.7	51.7	56.0	56.0	56.0	60.0	60.0	60.0	m
°	5	20	40	5	20	40	5	20	40	5	20	40	5	20	40	5	20	40	5	20	40	5	20	40	°
3.0																									3.0
3.5																									3.5
4.0																									4.0
4.5																									4.5
5.0																									5.0
6.0																									6.0
7.0																									7.0
8.0																									8.0
9.0																									9.0
10.0																									10.0
11.0																									11.0
12.0																									12.0
14.0																									14.0
16.0	2.7			2.1																					16.0
18.0	2.7			2.1			2.4			2.2			2.2			2.1									18.0
20.0	2.7			2.1			2.4			2.2			2.2			2.1									20.0
22.0	2.7	2.6		2.1	2.1		2.4	2.4		2.2	2.2		2.2			2.1			2.1			1.6			22.0
24.0	2.7	2.5		2.1	2.1		2.4	2.4		2.2	2.2		2.2	2.2		2.1	2.1		2.1	2.1		1.6			24.0
26.0	2.7	2.3		2.1	2.1		2.4	2.3		2.2	2.2		2.2	2.2		2.1	2.1		2.1	2.1		1.6	1.6		26.0
28.0	2.7	2.2		2.1	2.1		2.4	2.2		2.2	2.2		2.2	2.2		2.1	2.1		2.1	2.1		1.6	1.6		28.0
30.0	2.7	2.1	1.6	2.1	2.1		2.4	2.1		2.2	2.1		2.2	2.1		2.1	2.1		2.1	2.1		1.6	1.6		30.0
32.0	2.6	2.0	1.5	2.1	2.0	1.5	2.4	2.0	1.5	2.2	2.0	1.5	2.2	2.0		2.1	2.0		2.1	2.0		1.6	1.6		32.0
34.0	2.5	1.9	1.4	2.1	1.9	1.4	2.4	1.9	1.5	2.2	1.9	1.4	2.2	1.9	1.4	2.1	1.9	1.4	2.1	1.9	1.4	1.6	1.6		34.0
36.0	2.3	1.8	1.4	2.1	1.8	1.4	2.4	1.8	1.4	2.2	1.8	1.4	2.2	1.9	1.4	2.1	1.8	1.4	2.1	1.9	1.4	1.6	1.6	1.2	36.0
38.0	2.2	1.7	1.3	2.1	1.7	1.3	2.3	1.8	1.4	2.2	1.8	1.4	2.2	1.8	1.4	2.1	1.8	1.4	2.1	1.8	1.4	1.6	1.6	1.2	38.0
40.0	2.1	1.7	1.3	2.0	1.6	1.3	2.1	1.7	1.3	2.2	1.7	1.3	2.1	1.7	1.3	2.1	1.7	1.3	2.1	1.7	1.3	1.6	1.6	1.2	40.0
44.0	1.4	1.5	1.2	1.8	1.5	1.2	1.3	1.5	1.2	1.7	1.5	1.2	1.3	1.6	1.2	1.8	1.6	1.2	1.4	1.6	1.2		1.5	1.1	44.0
48.0		1.3	1.2	1.6	1.4	1.2		1.2	1.2	1.1	1.4	1.2		1.2	1.2	1.1	1.5	1.2		1.3	1.2			1.1	48.0
52.0			1.1	1.2	1.3	1.1			1.1		1.0	1.1			1.1		1.0	1.1			1.1				52.0
56.0					1.0													0.9							56.0
60.0																									60.0
64.0																									64.0
68.0																									68.0
72.0																									72.0
1	92	92	92	0	0	0	92	92	92	46	46	46	92	92	92	46	46	46	92	92	92	100	100	100	1
2	92	92	92	46	46	46	92	92	92	92	92	92	92	92	92	92	92	92	92	92	92	100	100	100	2
3	46	46	46	92	92	92	92	92	92	92	92	92	92	92	92	92	92	92	92	92	92	100	100	100	3
4	46	46	46	92	92	92	46	46	46	92	92	92	92	92	92	92	92	92	92	92	92	100	100	100	4
5	46	46	46	92	92	92	46	46	46	46	46	46	46	46	46	92	92	92	92	92	92	100	100	100	5
ID	42	42	42	21	21	21	38	38	38	31	31	31	32	32	32	23	23	23	24	24	24	16	16	16	ID
[DEG]	59~81	60~85	60~85	52~81	52~85	61~85	61~81	63~85	64~85	58~81	59~85	64~85	64~81	66~85	67~85	61~81	62~85	62~85	66~81	68~85	69~85	71~81	73~85	74~85	[DEG]
	1	1	1	1	1	1	1	1	1	1	1	1	1	1	1	1	1	1	1	1	1	1	1	1	
	8.7t	8.7t	8.7t	8.7t	8.7t	8.7t	8.7t	8.7t	8.7t	8.7t	8.7t	8.7t	8.7t	8.7t	8.7t	8.7t	8.7t	8.7t	8.7t	8.7t	8.7t	8.7t	8.7t	8.7t	

HLJ	1.0m + 2.8m	15.4 t	8.0m x 6.2m	360 °	JPN

m	12.8	12.8	12.8	25.8	25.8	25.8	25.8	25.8	25.8	30.1	30.1	30.1	30.1	30.1	30.1	34.4	34.4	34.4	34.4	34.4	34.4	34.4	34.4	34.4	m
°	5	20	40	5	20	40	5	20	40	5	20	40	5	20	40	5	20	40	5	20	40	5	20	40	°
3.0		31.6	25.3																						3.0
3.5	38.1	30.3	24.6		31.4			25.0																	3.5
4.0	36.1	29.1	23.9		30.6	23.4		24.2						31.2											4.0
4.5	34.3	28.0	23.3		29.8	23.1		23.3	21.5		30.2			30.4											4.5
5.0	32.7	27.0	22.8		29.0	22.7		22.4	20.6		29.5	22.8		29.8	22.9		29.9			24.9			16.9		5.0
6.0	29.9	25.3	21.8		27.7	22.0		20.5	19.0		28.3	22.2		28.5	22.3		28.9	22.5		24.9	23.0		16.9	16.9	6.0
7.0	27.7	23.8	20.9		26.5	21.3		18.9	17.7		27.1	21.6		27.4	21.7		27.9	22.0		24.9	22.4		16.9	16.9	7.0
8.0	25.7	22.6	20.2	32.0	25.4	20.8	18.6	17.5	16.5		26.1	21.1		26.3	21.2		26.9	21.5		24.3	21.9		16.9	16.7	8.0
9.0	24.1	21.5		28.8	24.4	20.2	17.3	16.3	15.5	28.1	25.2	20.6	29.4	25.4	20.7		26.0	21.0		23.1	20.9		16.2	15.9	9.0
10.0	22.7	20.6		23.7	23.5	19.7	16.1	15.3	14.6	23.1	23.6	20.2	24.3	24.5	20.2		24.2	20.6	24.4	22.1	20.1		15.3	14.9	10.0
11.0	20.7	19.9		19.9	20.3	19.3	15.1	14.4	13.7	19.3	19.8	19.8	20.4	20.8	19.8	19.8	20.3	20.2	21.2	21.1	19.3	14.8	14.4	14.0	11.0
12.0	17.7	17.9		16.9	17.3	17.7	14.2	13.6	13.0	16.4	16.8	17.2	17.4	17.8	18.2	16.9	17.3	17.7	18.2	18.5	18.6	13.9	13.5	13.2	12.0
14.0				12.7	12.9	13.2	12.6	12.2	11.8	12.1	12.4	12.7	13.1	13.4	13.7	12.6	12.9	13.2	13.8	14.1	14.4	12.3	12.1	11.8	14.0
16.0				9.7	9.9	10.1	11.4	11.1	10.8	9.2	9.4	9.7	10.2	10.4	10.6	9.7	9.9	10.1	10.8	11.0	11.3	11.1	10.9	10.6	16.0
18.0				7.6	7.7		9.8	9.9		7.0	7.2	7.4	8.0	8.2	8.3	7.5	7.7	7.9	8.6	8.8	9.0	9.9	9.8	9.7	18.0
20.0				5.9	6.0		8.1	8.2		5.4	5.6		6.3	6.5		5.9	6.0	6.2	7.0	7.1	7.2	8.3	8.5	8.6	20.0
22.0				4.6	4.7		6.8	6.8		4.1	4.3		5.0	5.2		4.6	4.7		5.6	5.8		7.0	7.1		22.0
24.0				3.6			5.7			3.1	3.2		4.0	4.1		3.5	3.6		4.6	4.7		5.9	6.0		24.0
26.0										2.2	2.3		3.1	3.2		2.7	2.8		3.7	3.8		5.0	5.1		26.0
28.0										1.5			2.4			1.9	2.0		3.0	3.0		4.2	4.3		28.0
30.0																1.3			2.3			3.6			30.0
32.0																			1.8			3.1			32.0
34.0																									34.0
36.0																									36.0
38.0																									38.0
40.0																									40.0
44.0																									44.0
48.0																									48.0
52.0																									52.0
56.0																									56.0
60.0																									60.0
64.0																									64.0
68.0																									68.0
72.0																									72.0
% 1	0	0	0	46	46	46	0	0	0	92	92	92	46	46	46	92	92	92	46	46	46	0	0	0	1
% 2	0	0	0	46	46	46	0	0	0	46	46	46	46	46	46	46	46	46	46	46	46	0	0	0	2
% 3	0	0	0	46	46	46	0	0	0	46	46	46	46	46	46	46	46	46	46	46	46	46	46	46	3
% 4	0	0	0	0	0	0	46	46	46	0	0	0	46	46	46	46	46	46	46	46	46	92	92	92	4
% 5	0	0	0	0	0	0	92	92	92	0	0	0	0	0	0	0	0	0	46	46	46	92	92	92	5
ID	1	1	1	66	66	66	17	17	17	67	67	67	54	54	54	55	55	55	49	49	49	19	19	19	ID
[DEG]	0~76	34~85	58~85	28~76	37~85	56~85	29~76	38~85	57~85	28~76	36~85	57~85	28~76	36~85	57~85	34~76	40~85	58~85	28~76	41~85	59~85	28~76	41~85	59~85	[DEG]
	5	5	5	4	4	4	3	3	3	4	4	4	4	4	4	4	4	4	3	3	3	2	2	2	
	60t	60t	60t	60t	60t	60t	26t	26t	26t	60t	60t	60t	60t	60t	60t	60t	60t	60t	26t	26t	26t	26t	26t	26t	

m	43.0	43.0	43.0	43.0	43.0	43.0	47.4	47.4	47.4	47.4	47.4	47.4	51.7	51.7	51.7	51.7	51.7	51.7	56.0	56.0	56.0	60.0	60.0	60.0	m
°	5	20	40	5	20	40	5	20	40	5	20	40	5	20	40	5	20	40	5	20	40	5	20	40	°
3.0																									3.0
3.5																									3.5
4.0																									4.0
4.5																									4.5
5.0																									5.0
6.0																									6.0
7.0		17.1	17.1		12.1	12.1		13.9			12.4														7.0
8.0		17.1	17.1		12.1	12.1		13.9	13.9		12.4	12.4		11.1			9.8								8.0
9.0		17.1	17.1		12.1	12.1		13.9	13.9		12.4	12.4		11.1	11.1		9.8	9.8		9.0	9.0		7.8		9.0
10.0		17.1	17.1		12.1	12.1		13.9	13.9		12.4	12.4		11.1	11.1		9.8	9.8		9.0	9.0		7.8	7.8	10.0
11.0		17.1	17.1		12.1	12.1		13.9	13.9		12.4	12.4		11.1	11.1		9.8	9.8		9.0	9.0		7.8	7.8	11.0
12.0		17.1	17.1		12.1	12.1		13.9	13.9		12.4	12.4		11.1	11.1		9.8	9.8		9.0	9.0		7.8	7.8	12.0
14.0	13.3	13.6	13.9	12.1	12.1	12.1		13.7	13.9		12.4	12.4		11.1	11.1		9.8	9.8		9.0	9.0		7.8	7.8	14.0
16.0	10.3	10.5	10.8	11.5	11.4	11.2	10.4	10.7	10.9	11.1	11.3	11.5	10.6	10.9	11.1	9.8	9.8	9.8		9.0	9.0		7.8	7.8	16.0
18.0	8.1	8.3	8.5	9.8	9.9	10.1	8.2	8.4	8.6	8.9	9.1	9.3	8.4	8.7	8.9	9.2	9.4	9.5	8.7	8.9	9.0		7.8	7.8	18.0
20.0	6.4	6.6	6.8	8.1	8.2	8.3	6.5	6.7	6.9	7.2	7.4	7.5	6.8	6.9	7.1	7.5	7.6	7.8	7.1	7.2	7.4	7.1	7.2	7.4	20.0
22.0	5.1	5.3	5.4	6.7	6.8	6.9	5.2	5.4	5.5	5.9	6.0	6.1	5.4	5.6	5.8	6.1	6.3	6.4	5.7	5.9	6.0	5.7	5.9	6.0	22.0
24.0	4.1	4.2	4.3	5.6	5.7	5.8	4.2	4.3	4.4	4.8	4.9	5.0	4.4	4.5	4.6	5.1	5.2	5.3	4.7	4.8	4.9	4.7	4.8	4.9	24.0
26.0	3.2	3.3	3.4	4.7	4.8	4.9	3.3	3.4	3.5	3.9	4.0	4.1	3.5	3.6	3.7	4.2	4.3	4.4	3.8	3.9	4.0	3.8	3.9	4.0	26.0
28.0	2.4	2.5		4.0	4.0		2.6	2.7	2.7	3.2	3.3	3.3	2.8	2.9	3.0	3.4	3.5	3.6	3.0	3.1	3.2	3.0	3.1	3.2	28.0
30.0	1.8	1.9		3.3	3.4		1.9	2.0		2.5	2.6		2.1	2.2	2.3	2.8	2.9	2.9	2.4	2.5	2.6	2.4	2.5	2.6	30.0
32.0	1.3	1.4		2.8	2.8		1.4	1.5		2.0	2.1		1.6	1.7		2.2	2.3		1.9	1.9	2.0	1.9	1.9	2.0	32.0
34.0				2.3	2.3					1.5	1.6					1.8	1.8		1.4	1.5		1.4	1.5	1.5	34.0
36.0				1.9	1.9											1.4	1.4								36.0
38.0				1.5																					38.0
40.0				1.2																					40.0
44.0																									44.0
48.0																									48.0
52.0																									52.0
56.0																									56.0
60.0																									60.0
64.0																									64.0
68.0																									68.0
72.0																									72.0
% 1	92	92	92	0	0	0	92	92	92	46	46	46	92	92	92	46	46	46	92	92	92	100	100	100	1
% 2	92	92	92	46	46	46	92	92	92	92	92	92	92	92	92	92	92	92	92	92	92	100	100	100	2
% 3	46	46	46	92	92	92	92	92	92	92	92	92	92	92	92	92	92	92	92	92	92	100	100	100	3
% 4	46	46	46	92	92	92	46	46	46	92	92	92	92	92	92	92	92	92	92	92	92	100	100	100	4
% 5	46	46	46	92	92	92	46	46	46	46	46	46	46	46	46	92	92	92	92	92	92	100	100	100	5
ID	42	42	42	21	21	21	38	38	38	31	31	31	32	32	32	23	23	23	24	24	24	16	16	16	ID
[DEG]	45~76	46~85	57~85	28~76	38~85	57~85	51~76	52~85	58~85	48~76	48~85	58~85	55~76	56~85	59~85	49~76	50~85	59~85	56~76	57~85	60~85	59~76	60~85	60~85	[DEG]
	2	2	2	2	2	2	2	2	2	2	2	2	2	2	2	2	2	2	2	2	2	2	2	2	
	26t	26t	26t	26t	26t	26t	26t	26t	26t	26t	26t	26t	26t	26t	26t	26t	26t	26t	26t	26t	26t	26t	26t	26t	

油圧チルトジブ

HLJ	1.0m + 9.2m	15.4 t	8.0m x 6.2m	360 °	JPN

m	12.8	12.8	12.8	25.8	25.8	25.8	25.8	25.8	25.8	30.1	30.1	30.1	30.1	30.1	30.1	34.4	34.4	34.4	34.4	34.4	34.4	34.4	34.4	34.4	m
°	5	20	40	5	20	40	5	20	40	5	20	40	5	20	40	5	20	40	5	20	40	5	20	40	°
3.0																									3.0
3.5																									3.5
4.0	15.0																								4.0
4.5	15.0																								4.5
5.0	15.0	13.5																							5.0
6.0	15.0	12.4			14.4			14.1																	6.0
7.0	14.8	11.4	8.9	15.0	13.5		14.3	13.3			13.6			13.8			13.8			13.4					7.0
8.0	13.4	10.6	8.4	15.0	12.8		14.3	12.5		15.0	12.9		15.0	13.1			13.2			13.3			10.1		8.0
9.0	12.2	9.9	8.0	15.0	12.1	8.7	14.0	11.9	8.6	15.0	12.3	8.8	15.0	12.5	8.8	15.0	12.6		13.4	12.7			10.1		9.0
10.0	11.2	9.2	7.6	15.0	11.5	8.4	13.2	11.3	8.4	15.0	11.8	8.5	15.0	11.9	8.6	15.0	12.1	8.6	13.4	12.2	8.6	10.1	10.1		10.0
11.0	10.4	8.7	7.3	15.0	10.9	8.2	12.5	10.8	8.1	15.0	11.3	8.3	15.0	11.4	8.3	15.0	11.6	8.4	13.4	11.7	8.4	10.1	10.1	8.3	11.0
12.0	9.6	8.2	7.0	14.2	10.4	7.9	11.7	10.3	7.9	15.0	10.8	8.1	15.0	10.9	8.1	15.0	11.1	8.2	13.4	11.2	8.2	10.1	10.1	8.1	12.0
14.0	8.4	7.4	6.5	12.6	9.6	7.5	10.3	9.4	7.4	13.1	10.0	7.7	13.7	10.1	7.7	13.4	10.3	7.8	13.4	10.4	7.8	10.1	9.9	7.8	14.0
16.0	7.5	6.8		10.8	8.9	7.1	9.1	8.4	7.1	10.2	9.3	7.3	11.1	9.3	7.3	10.4	9.7	7.5	11.4	9.7	7.5	9.7	9.2	7.4	16.0
18.0	6.8			8.7	8.3	6.8	8.1	7.6	6.8	8.0	8.7	7.0	8.9	8.7	7.0	8.3	9.0	7.2	9.2	9.1	7.2	8.7	8.4	7.1	18.0
20.0				7.0	7.5	6.5	7.3	6.9	6.5	6.4	7.0	6.7	7.2	7.7	6.8	6.6	7.2	6.9	7.5	8.0	6.9	7.8	7.6	6.9	20.0
22.0				5.7	6.1	6.3	6.7	6.3	6.1	5.1	5.6	6.1	5.9	6.3	6.5	5.3	5.8	6.4	6.2	6.6	6.7	7.1	6.9	6.7	22.0
24.0				4.6	5.0		6.1	5.8		4.0	4.5	4.9	4.8	5.2	5.6	4.2	4.7	5.2	5.1	5.5	5.9	6.2	6.3	6.2	24.0
26.0				3.7	4.0		5.4	5.4		3.1	3.5		3.9	4.3		3.4	3.8	4.2	4.2	4.6	4.9	5.3	5.6	5.7	26.0
28.0				3.0	3.3		4.7	4.9		2.4	2.7		3.2	3.5		2.7	3.0		3.5	3.8		4.6	4.8		28.0
30.0				2.4			4.0			1.8	2.1		2.6	2.8		2.0	2.3		2.9	3.1		3.9	4.1		30.0
32.0										1.2	1.4		2.0	2.2		1.5	1.8		2.3	2.5		3.4	3.5		32.0
34.0													1.6				1.2		1.9	2.0		2.9	3.0		34.0
36.0																			1.4			2.5			36.0
38.0																						2.1			38.0
40.0																									40.0
44.0																									44.0
48.0																									48.0
52.0																									52.0
56.0																									56.0
60.0																									60.0
64.0																									64.0
68.0																									68.0
72.0																									72.0
1	0	0	0	46	46	46	0	0	0	92	92	92	46	46	46	92	92	92	46	46	46	0	0	0	1
2	0	0	0	46	46	46	0	0	0	46	46	46	46	46	46	46	46	46	46	46	46	0	0	0	2
3	0	0	0	46	46	46	0	0	0	46	46	46	46	46	46	46	46	46	46	46	46	46	46	46	3
4	0	0	0	0	0	0	46	46	46	0	0	0	46	46	46	46	46	46	46	46	46	92	92	92	4
5	0	0	0	0	0	0	92	92	92	0	0	0	0	0	0	0	0	0	46	46	46	92	92	92	5
ID	1	1	1	66	66	66	17	17	17	67	67	67	54	54	54	55	55	55	49	49	49	19	19	19	ID
[DEG]	0~79	44~85	57~85	27~79	37~85	56~85	28~79	38~85	57~85	33~79	36~85	57~85	27~79	36~85	57~85	41~79	40~85	58~85	32~79	40~85	58~85	27~79	41~85	59~85	[DEG]
	2	2	2	2	2	2	2	2	2	2	2	2	2	2	2	2	2	2	2	2	2	2	2	2	
	26t	26t	26t	26t	26t	26t	26t	26t	26t	26t	26t	26t	26t	26t	26t	26t	26t	26t	26t	26t	26t	26t	26t	26t	

m	43.0	43.0	43.0	43.0	43.0	43.0	47.4	47.4	47.4	47.4	47.4	47.4	51.7	51.7	51.7	51.7	51.7	51.7	56.0	56.0	56.0	60.0	60.0	60.0	m
°	5	20	40	5	20	40	5	20	40	5	20	40	5	20	40	5	20	40	5	20	40	5	20	40	°
3.0																									3.0
3.5																									3.5
4.0																									4.0
4.5																									4.5
5.0																									5.0
6.0																									6.0
7.0																									7.0
8.0																									8.0
9.0		10.6			7.2																				9.0
10.0		10.6			7.2			8.4			7.5														10.0
11.0		10.6			7.2			8.4			7.5			7.0			6.4			6.4					11.0
12.0	10.6	10.6	8.3	7.2	7.2	7.2		8.4			7.5			7.0			6.4			6.4			5.7		12.0
14.0	10.6	10.6	7.9	7.2	7.2	7.2	8.4	8.4	8.0	7.5	7.5	7.5		7.0	7.0	6.4	6.4	6.4		6.4			5.7		14.0
16.0	10.6	10.2	7.6	7.2	7.2	7.2	8.4	8.4	7.7	7.5	7.5	7.5	7.0	7.0	7.0	6.4	6.4	6.4	6.4	6.4	6.4		5.7	5.7	16.0
18.0	8.4	9.2	7.4	7.2	7.2	7.2	8.4	8.4	7.4	7.5	7.5	7.5	7.0	7.0	7.0	6.4	6.4	6.4	6.4	6.4	6.4	5.7	5.7	5.7	18.0
20.0	6.8	7.4	7.1	7.2	7.2	7.1	7.0	7.6	7.2	7.5	7.5	7.2	7.0	7.0	7.0	6.4	6.4	6.4	6.4	6.4	6.4	5.7	5.7	5.7	20.0
22.0	5.5	6.0	6.6	7.1	7.2	6.9	5.7	6.2	6.9	6.2	6.8	7.0	5.8	6.4	7.0	6.4	6.4	6.4	6.0	6.4	6.4	5.7	5.7	5.7	22.0
24.0	4.4	4.9	5.4	6.0	6.3	6.7	4.6	5.1	5.6	5.2	5.6	6.1	4.8	5.2	5.8	5.4	5.8	6.3	5.0	5.4	6.0	4.9	5.4	5.5	24.0
26.0	3.5	4.0	4.4	5.1	5.4	5.7	3.7	4.2	4.6	4.3	4.7	5.1	3.9	4.3	4.8	4.5	4.9	5.3	4.1	4.5	5.0	4.0	4.5	5.0	26.0
28.0	2.8	3.2	3.6	4.3	4.6	4.9	3.0	3.4	3.8	3.5	3.9	4.3	3.1	3.5	3.9	3.7	4.1	4.5	3.3	3.7	4.1	3.3	3.7	4.1	28.0
30.0	2.2	2.5	2.9	3.7	3.9	4.2	2.4	2.7	3.1	2.9	3.2	3.5	2.5	2.8	3.2	3.1	3.4	3.7	2.7	3.0	3.4	2.7	3.0	3.4	30.0
32.0	1.6	2.0	2.3	3.1	3.3	3.6	1.8	2.1	2.5	2.3	2.6	2.9	2.0	2.3	2.6	2.5	2.8	3.1	2.2	2.5	2.8	2.1	2.4	2.8	32.0
34.0		1.4		2.6	2.8			1.6	1.9	1.9	2.1	2.4	1.4	1.8	2.1	2.1	2.3	2.6	1.7	2.0	2.3	1.6	1.9	2.3	34.0
36.0				2.2	2.4					1.4	1.7				1.6	1.6	1.9	2.1		1.5	1.8		1.5	1.8	36.0
38.0				1.8	2.0						1.2					1.2	1.5				1.4				38.0
40.0				1.5	1.6																				40.0
44.0																									44.0
48.0																									48.0
52.0																									52.0
56.0																									56.0
60.0																									60.0
64.0																									64.0
68.0																									68.0
72.0																									72.0
1	92	92	92	0	0	0	92	92	92	46	46	46	92	92	92	46	46	46	92	92	92	100	100	100	1
2	92	92	92	46	46	46	92	92	92	92	92	92	92	92	92	92	92	92	92	92	92	100	100	100	2
3	46	46	46	92	92	92	92	92	92	92	92	92	92	92	92	92	92	92	92	92	92	100	100	100	3
4	46	46	46	92	92	92	46	46	46	92	92	92	92	92	92	92	92	92	92	92	92	100	100	100	4
5	46	46	46	92	92	92	46	46	46	46	46	46	46	46	46	92	92	92	92	92	92	100	100	100	5
ID	42	42	42	21	21	21	38	38	38	31	31	31	32	32	32	23	23	23	24	24	24	16	16	16	ID
[DEG]	52~79	52~85	57~85	40~79	42~85	58~85	56~79	56~85	58~85	51~79	50~85	58~85	57~79	59~85	59~85	52~79	54~85	59~85	60~79	60~85	60~85	63~79	63~85	65~85	[DEG]
	2	2	2	1	1	1	1	1	1	1	1	1	1	1	1	1	1	1	1	1	1	1	1	1	
	26t	26t	26t	8.7t	8.7t	8.7t	8.7t	8.7t	8.7t	8.7t	8.7t	8.7t	8.7t	8.7t	8.7t	8.7t	8.7t	8.7t	8.7t	8.7t	8.7t	8.7t	8.7t	8.7t	

HLJ	1.0m + 17.0m	15.4 t	8.0m x 6.2m	360 °	JPN

m	12.8	12.8	12.8	25.8	25.8	25.8	25.8	25.8	25.8	30.1	30.1	30.1	30.1	30.1	30.1	34.4	34.4	34.4	34.4	34.4	34.4	34.4	34.4	34.4	m
°	5	20	40	5	20	40	5	20	40	5	20	40	5	20	40	5	20	40	5	20	40	5	20	40	°
3.0																									3.0
3.5																									3.5
4.0																									4.0
4.5																									4.5
5.0																									5.0
6.0	7.3																								6.0
7.0	6.8																								7.0
8.0	6.4	5.4		7.0			5.6																		8.0
9.0	6.0	5.1		6.7			5.6			6.7			6.5												9.0
10.0	5.7	4.8		6.4	5.0		5.6	4.8		6.5			6.3			6.3			5.9			4.6			10.0
11.0	5.3	4.6		6.1	4.8		5.6	4.6		6.2	4.9		6.1	4.8		6.1	4.8		5.9	4.7		4.6			11.0
12.0	5.1	4.4		5.8	4.7		5.5	4.5		6.0	4.7		5.9	4.6		5.9	4.7		5.7	4.6		4.6	4.4		12.0
14.0	4.6	4.0	3.5	5.4	4.4		5.1	4.2		5.5	4.4		5.4	4.4		5.5	4.4		5.4	4.3		4.6	4.2		14.0
16.0	4.2	3.7	3.3	5.0	4.1	3.4	4.8	3.9	3.3	5.1	4.2	3.4	5.1	4.1	3.4	5.2	4.2	3.4	5.1	4.1		4.6	4.0		16.0
18.0	3.8	3.4	3.1	4.6	3.9	3.3	4.4	3.7	3.2	4.8	3.9	3.3	4.8	3.9	3.3	4.9	3.9	3.3	4.8	3.9	3.2	4.6	3.8	3.2	18.0
20.0	3.5	3.2	3.0	4.3	3.7	3.1	4.2	3.5	3.1	4.5	3.7	3.2	4.5	3.7	3.2	4.6	3.8	3.2	4.5	3.7	3.1	4.3	3.6	3.1	20.0
22.0	3.3	3.1	2.9	4.1	3.5	3.0	3.9	3.4	3.0	4.3	3.6	3.1	4.2	3.5	3.0	4.3	3.6	3.1	4.3	3.5	3.0	4.1	3.5	3.0	22.0
24.0	3.1	2.9		3.8	3.3	2.9	3.7	3.2	2.9	4.0	3.4	3.0	4.0	3.4	2.9	4.1	3.5	3.0	4.0	3.4	2.9	3.9	3.3	2.9	24.0
26.0	3.0			3.6	3.2	2.9	3.5	3.1	2.8	3.8	3.3	2.9	3.8	3.2	2.9	3.9	3.3	2.9	3.8	3.3	2.9	3.7	3.2	2.8	26.0
28.0				3.5	3.1	2.8	3.4	3.0	2.7	3.4	3.2	2.8	3.6	3.1	2.8	3.5	3.2	2.8	3.7	3.2	2.8	3.6	3.1	2.7	28.0
30.0				3.3	3.0		3.2	2.9		2.8	3.0	2.8	3.4	3.0	2.7	2.9	3.1	2.8	3.5	3.1	2.7	3.4	3.0	2.7	30.0
32.0				2.8	2.9		3.1	2.8		2.2	2.7	2.7	2.8	2.9	2.7	2.3	2.8	2.7	3.0	3.0	2.7	3.3	2.9	2.6	32.0
34.0				2.3	2.6		3.0	2.7		1.7	2.2		2.4	2.7		1.8	2.3	2.7	2.5	2.9	2.6	3.2	2.8	2.6	34.0
36.0				1.9	2.1		2.9	2.7		1.3	1.7		1.9	2.3		1.4	1.8		2.1	2.4		2.9	2.7		36.0
38.0				1.5			2.8				1.3		1.6	1.8			1.4		1.7	2.0		2.6	2.7		38.0
40.0													1.2						1.4	1.6		2.2	2.4		40.0
44.0																						1.6			44.0
48.0																									48.0
52.0																									52.0
56.0																									56.0
60.0																									60.0
64.0																									64.0
68.0																									68.0
72.0																									72.0
1	0	0	0	46	46	46	0	0	0	92	92	92	46	46	46	92	92	92	46	46	46	0	0	0	1
2	0	0	0	46	46	46	0	0	0	46	46	46	46	46	46	46	46	46	46	46	46	0	0	0	2
3	0	0	0	46	46	46	0	0	0	46	46	46	46	46	46	46	46	46	46	46	46	46	46	46	3
4	0	0	0	0	0	0	46	46	46	0	0	0	46	46	46	46	46	46	46	46	46	92	92	92	4
5	0	0	0	0	0	0	92	92	92	0	0	0	0	0	0	0	0	0	46	46	46	92	92	92	5
ID	1	1	1	66	66	66	17	17	17	67	67	67	54	54	54	55	55	55	49	49	49	19	19	19	ID
[DEG]	0~81	41~85	56~85	25~81	36~85	59~85	26~81	37~85	60~85	40~81	40~85	57~85	31~81	40~85	57~85	46~81	46~85	58~85	39~81	43~85	58~85	31~81	44~85	58~85	[DEG]
	1	1	1	1	1	1	1	1	1	1	1	1	1	1	1	1	1	1	1	1	1	1	1	1	
	8.7t	8.7t	8.7t	8.7t	8.7t	8.7t	8.7t	8.7t	8.7t	8.7t	8.7t	8.7t	8.7t	8.7t	8.7t	8.7t	8.7t	8.7t	8.7t	8.7t	8.7t	8.7t	8.7t	8.7t	

m	43.0	43.0	43.0	43.0	43.0	43.0	47.4	47.4	47.4	47.4	47.4	47.4	51.7	51.7	51.7	51.7	51.7	51.7	56.0	56.0	56.0	60.0	60.0	60.0	m
°	5	20	40	5	20	40	5	20	40	5	20	40	5	20	40	5	20	40	5	20	40	5	20	40	°
3.0																									3.0
3.5																									3.5
4.0																									4.0
4.5																									4.5
5.0																									5.0
6.0																									6.0
7.0																									7.0
8.0																									8.0
9.0																									9.0
10.0																									10.0
11.0																									11.0
12.0	5.5			4.1																					12.0
14.0	5.4	4.3		4.1	4.1		4.7	4.2		4.3	4.2		4.1			3.9									14.0
16.0	5.1	4.1		4.1	3.9		4.7	4.1		4.3	4.0		4.1	4.0		3.9	3.9		3.9	3.8		3.6	3.6		16.0
18.0	4.8	3.9	3.2	4.1	3.8		4.7	3.9		4.3	3.8		4.1	3.8		3.9	3.7		3.9	3.7		3.6	3.6		18.0
20.0	4.6	3.8	3.1	4.1	3.6	3.1	4.6	3.7	3.1	4.3	3.7	3.1	4.1	3.7	3.1	3.9	3.6	3.0	3.9	3.6		3.6	3.5		20.0
22.0	4.4	3.6	3.0	4.1	3.5	3.0	4.4	3.6	3.0	4.3	3.5	3.0	4.1	3.5	3.0	3.9	3.5	2.9	3.9	3.5	2.9	3.6	3.4	2.9	22.0
24.0	4.2	3.5	3.0	4.0	3.3	2.9	4.2	3.5	2.9	4.1	3.4	2.9	4.1	3.4	2.9	3.9	3.4	2.9	3.9	3.3	2.9	3.6	3.3	2.8	24.0
26.0	4.0	3.3	2.9	3.8	3.2	2.8	4.0	3.3	2.9	3.9	3.3	2.8	4.0	3.3	2.8	3.8	3.2	2.8	3.8	3.2	2.8	3.6	3.2	2.8	26.0
28.0	3.5	3.2	2.8	3.7	3.1	2.7	3.5	3.2	2.8	3.8	3.2	2.8	3.6	3.2	2.8	3.7	3.1	2.7	3.7	3.1	2.7	3.6	3.1	2.7	28.0
30.0	2.9	3.1	2.8	3.5	3.0	2.7	2.9	3.1	2.7	3.3	3.1	2.7	2.9	3.1	2.7	3.5	3.1	2.7	3.1	3.1	2.7	3.0	3.0	2.6	30.0
32.0	2.3	2.9	2.7	3.4	2.9	2.6	2.3	2.9	2.7	2.8	3.0	2.7	2.4	3.0	2.7	2.9	3.0	2.6	2.5	3.0	2.6	2.5	2.9	2.6	32.0
34.0	1.9	2.4	2.6	3.0	2.9	2.6	1.8	2.4	2.6	2.3	2.8	2.6	1.9	2.4	2.6	2.4	2.9	2.6	2.0	2.6	2.6	2.0	2.5	2.5	34.0
36.0	1.4	1.9	2.4	2.5	2.8	2.5	1.4	1.9	2.4	1.9	2.3	2.6	1.5	2.0	2.5	2.0	2.4	2.5	1.6	2.1	2.5	1.5	2.0	2.5	36.0
38.0		1.5	1.9	2.2	2.5	2.5		1.5	1.9	1.5	1.9	2.3		1.5	2.0	1.6	2.0	2.4		1.7	2.1		1.6	2.1	38.0
40.0				1.8	2.1				1.5		1.5	1.9			1.6	1.3	1.6	2.0			1.7			1.7	40.0
44.0				1.2	1.5													1.3							44.0
48.0																									48.0
52.0																									52.0
56.0																									56.0
60.0																									60.0
64.0																									64.0
68.0																									68.0
72.0																									72.0
1	92	92	92	0	0	0	92	92	92	46	46	46	92	92	92	46	46	46	92	92	92	100	100	100	1
2	92	92	92	46	46	46	92	92	92	92	92	92	92	92	92	92	92	92	92	92	92	100	100	100	2
3	46	46	46	92	92	92	92	92	92	92	92	92	92	92	92	92	92	92	92	92	92	100	100	100	3
4	46	46	46	92	92	92	46	46	46	92	92	92	92	92	92	92	92	92	92	92	92	100	100	100	4
5	46	46	46	92	92	92	46	46	46	46	46	46	46	46	46	92	92	92	92	92	92	100	100	100	5
ID	42	42	42	21	21	21	38	38	38	31	31	31	32	32	32	23	23	23	24	24	24	16	16	16	ID
[DEG]	55~81	56~85	60~85	45~81	48~85	60~85	58~81	59~85	60~85	56~81	57~85	60~85	61~81	62~85	63~85	57~81	60~85	59~85	63~81	65~85	66~85	65~81	67~85	68~85	[DEG]
	1	1	1	1	1	1	1	1	1	1	1	1	1	1	1	1	1	1	1	1	1	1	1	1	
	8.7t	8.7t	8.7t	8.7t	8.7t	8.7t	8.7t	8.7t	8.7t	8.7t	8.7t	8.7t	8.7t	8.7t	8.7t	8.7t	8.7t	8.7t	8.7t	8.7t	8.7t	8.7t	8.7t	8.7t	

油圧チルトジブ

HLJ	1.0m + 24.0m	15.4 t	8.0m x 6.2m	360 °	JPN

m	12.8	12.8	12.8	25.8	25.8	25.8	25.8	25.8	25.8	30.1	30.1	30.1	30.1	30.1	30.1	34.4	34.4	34.4	34.4	34.4	34.4	34.4	34.4	34.4	m
°	5	20	40	5	20	40	5	20	40	5	20	40	5	20	40	5	20	40	5	20	40	5	20	40	°
3.0																									3.0
3.5																									3.5
4.0																									4.0
4.5																									4.5
5.0																									5.0
6.0																									6.0
7.0																									7.0
8.0	5.1																								8.0
9.0	5.1																								9.0
10.0	5.1			4.9			3.7																		10.0
11.0	5.1			4.9			3.7			4.6			4.3												11.0
12.0	5.1	4.5		4.9			3.7			4.6			4.3			4.2			4.0			3.2			12.0
14.0	4.8	4.0		4.9	4.4		3.7	3.7		4.6	4.4		4.3	4.3		4.2			4.0			3.2			14.0
16.0	4.3	3.6		4.9	4.1		3.7	3.7		4.6	4.1		4.3	4.1		4.2	4.1		4.0	4.0		3.2	3.2		16.0
18.0	3.8	3.3		4.6	3.8		3.7	3.7		4.6	3.8		4.3	3.9		4.2	3.9		4.0	3.8		3.2	3.2		18.0
20.0	3.4	3.0	2.6	4.3	3.5		3.7	3.4		4.4	3.6		4.3	3.6		4.2	3.6		4.0	3.7		3.2	3.2		20.0
22.0	3.1	2.7	2.4	4.1	3.2	2.6	3.7	3.2	2.5	4.2	3.3	2.6	4.2	3.4	2.6	4.2	3.4	2.6	4.0	3.4		3.2	3.2		22.0
24.0	2.8	2.5	2.2	3.7	3.0	2.4	3.7	3.0	2.4	4.0	3.1	2.5	4.0	3.1	2.5	4.0	3.2	2.5	3.9	3.2	2.5	3.2	3.2	2.5	24.0
26.0	2.6	2.3	2.1	3.5	2.8	2.3	3.4	2.8	2.3	3.7	2.9	2.4	3.7	3.0	2.4	3.9	3.0	2.4	3.8	3.1	2.4	3.2	3.0	2.4	26.0
28.0	2.4	2.2	2.0	3.2	2.7	2.2	3.2	2.6	2.2	3.4	2.8	2.3	3.4	2.8	2.3	3.6	2.9	2.3	3.6	2.9	2.3	3.2	2.8	2.3	28.0
30.0	2.2	2.0		3.0	2.5	2.1	2.9	2.5	2.1	3.2	2.6	2.2	3.2	2.6	2.2	3.3	2.7	2.2	3.4	2.7	2.2	3.2	2.7	2.2	30.0
32.0	2.0	1.9		2.8	2.4	2.0	2.8	2.4	2.0	2.7	2.5	2.1	3.0	2.5	2.1	2.7	2.6	2.1	3.2	2.6	2.1	3.1	2.6	2.1	32.0
34.0				2.6	2.3	2.0	2.6	2.3	2.0	2.2	2.4	2.0	2.7	2.4	2.0	2.2	2.5	2.1	2.8	2.5	2.1	3.0	2.5	2.1	34.0
36.0				2.3	2.2	1.9	2.4	2.1	1.9	1.8	2.3	2.0	2.3	2.3	2.0	1.8	2.4	2.0	2.4	2.4	2.0	2.8	2.4	2.0	36.0
38.0				1.9	2.1		2.3	2.1		1.4	1.9	1.9	1.9	2.2	1.9	1.4	1.9	1.9	2.0	2.3	1.9	2.6	2.3	1.9	38.0
40.0				1.6	1.9		2.2	2.0			1.5		1.6	2.0			1.6	1.9	1.7	2.1	1.9	2.4	2.2	1.9	40.0
44.0							2.0							1.3						1.4		1.8	2.0		44.0
48.0																						1.3	1.5		48.0
52.0																									52.0
56.0																									56.0
60.0																									60.0
64.0																									64.0
68.0																									68.0
72.0																									72.0
1	0	0	0	46	46	46	0	0	0	92	92	92	46	46	46	92	92	92	46	46	46	0	0	0	1
2	0	0	0	46	46	46	0	0	0	46	46	46	46	46	46	46	46	46	46	46	46	0	0	0	2
3	0	0	0	46	46	46	0	0	0	46	46	46	46	46	46	46	46	46	46	46	46	46	46	46	3
4	0	0	0	0	0	0	46	46	46	0	0	0	46	46	46	46	46	46	46	46	46	92	92	92	4
5	0	0	0	0	0	0	92	92	92	0	0	0	0	0	0	0	0	0	46	46	46	92	92	92	5
ID	1	1	1	66	66	66	17	17	17	67	67	67	54	54	54	55	55	55	49	49	49	19	19	19	ID
[DEG]	0~81	37~85	59~85	38~81	44~85	57~85	29~81	45~85	58~85	47~81	50~85	59~85	44~81	42~85	59~85	51~81	54~85	59~85	49~81	48~85	59~85	38~81	42~85	60~85	[DEG]
	1	1	1	1	1	1	1	1	1	1	1	1	1	1	1	1	1	1	1	1	1	1	1	1	
	8.7t	8.7t	8.7t	8.7t	8.7t	8.7t	8.7t	8.7t	8.7t	8.7t	8.7t	8.7t	8.7t	8.7t	8.7t	8.7t	8.7t	8.7t	8.7t	8.7t	8.7t	8.7t	8.7t	8.7t	

m	43.0	43.0	43.0	43.0	43.0	43.0	47.4	47.4	47.4	47.4	47.4	47.4	51.7	51.7	51.7	51.7	51.7	51.7	56.0	56.0	56.0	60.0	60.0	60.0	m
°	5	20	40	5	20	40	5	20	40	5	20	40	5	20	40	5	20	40	5	20	40	5	20	40	°
3.0																									3.0
3.5																									3.5
4.0																									4.0
4.5																									4.5
5.0																									5.0
6.0																									6.0
7.0																									7.0
8.0																									8.0
9.0																									9.0
10.0																									10.0
11.0																									11.0
12.0																									12.0
14.0	3.8			2.9																					14.0
16.0	3.8			2.9			3.3			3.1			3.0			2.9									16.0
18.0	3.8	3.8		2.9	2.9		3.3	3.3		3.1	3.1		3.0	3.0		2.9			2.9						18.0
20.0	3.8	3.6		2.9	2.9		3.3	3.3		3.1	3.1		3.0	3.0		2.9	2.9		2.9	2.9		2.4			20.0
22.0	3.8	3.5		2.9	2.9		3.3	3.3		3.1	3.1		3.0	3.0		2.9	2.9		2.9	2.9		2.4	2.4		22.0
24.0	3.8	3.3	2.5	2.9	2.9		3.3	3.3		3.1	3.1		3.0	3.0		2.9	2.9		2.9	2.9		2.4	2.4		24.0
26.0	3.8	3.2	2.4	2.9	2.9	2.4	3.3	3.2	2.4	3.1	3.1	2.4	3.0	3.0		2.9	2.9		2.9	2.9		2.4	2.4		26.0
28.0	3.7	3.0	2.3	2.9	2.9	2.3	3.3	3.0	2.3	3.1	3.0	2.3	3.0	3.0	2.3	2.9	2.9	2.3	2.9	2.9	2.3	2.4	2.4		28.0
30.0	3.2	2.9	2.3	2.9	2.8	2.2	3.2	2.9	2.3	3.1	2.9	2.3	3.0	2.9	2.3	2.9	2.9	2.3	2.9	2.9	2.3	2.4	2.4	2.0	30.0
32.0	2.7	2.8	2.2	2.9	2.7	2.2	2.6	2.8	2.2	3.0	2.8	2.2	2.6	2.8	2.2	2.9	2.8	2.2	2.7	2.8	2.2	2.4	2.4	2.0	32.0
34.0	2.2	2.6	2.1	2.9	2.6	2.1	2.1	2.7	2.1	2.5	2.7	2.1	2.1	2.7	2.2	2.6	2.7	2.2	2.2	2.8	2.2	2.1	2.4	1.9	34.0
36.0	1.7	2.4	2.1	2.7	2.5	2.1	1.7	2.3	2.1	2.1	2.6	2.1	1.7	2.4	2.1	2.1	2.6	2.1	1.8	2.5	2.1	1.7	2.4	1.9	36.0
38.0	1.3	1.9	2.0	2.3	2.4	2.0		1.9	2.0	1.7	2.2	2.0		1.9	2.0	1.8	2.3	2.1		2.0	2.1		2.0	1.9	38.0
40.0		1.5	2.0	2.0	2.3	2.0		1.5	2.0	1.3	1.8	2.0		1.5	2.0	1.4	1.9	2.0		1.6	2.0		1.6	1.8	40.0
44.0			1.3	1.4	1.7	1.9			1.4			1.7			1.4		1.3	1.8			1.5			1.5	44.0
48.0					1.2																				48.0
52.0																									52.0
56.0																									56.0
60.0																									60.0
64.0																									64.0
68.0																									68.0
72.0																									72.0
1	92	92	92	0	0	0	92	92	92	46	46	46	92	92	92	46	46	46	92	92	92	100	100	100	1
2	92	92	92	46	46	46	92	92	92	92	92	92	92	92	92	92	92	92	92	92	92	100	100	100	2
3	46	46	46	92	92	92	92	92	92	92	92	92	92	92	92	92	92	92	92	92	92	100	100	100	3
4	46	46	46	92	92	92	46	46	46	92	92	92	92	92	92	92	92	92	92	92	92	100	100	100	4
5	46	46	46	92	92	92	46	46	46	46	46	46	46	46	46	92	92	92	92	92	92	100	100	100	5
ID	42	42	42	21	21	21	38	38	38	31	31	31	32	32	32	23	23	23	24	24	24	16	16	16	ID
[DEG]	58~81	61~85	61~85	53~81	53~85	62~85	63~81	64~85	64~85	59~81	64~85	65~85	66~81	67~85	67~85	62~81	63~85	67~85	68~81	69~85	69~85	70~81	71~85	72~85	[DEG]
	1	1	1	1	1	1	1	1	1	1	1	1	1	1	1	1	1	1	1	1	1	1	1	1	
	8.7t	8.7t	8.7t	8.7t	8.7t	8.7t	8.7t	8.7t	8.7t	8.7t	8.7t	8.7t	8.7t	8.7t	8.7t	8.7t	8.7t	8.7t	8.7t	8.7t	8.7t	8.7t	8.7t	8.7t	

HLJ	1.0m + 31.0m	15.4 t	8.0m x 6.2m	360 °	JPN

m	12.8	12.8	12.8	25.8	25.8	25.8	25.8	25.8	25.8	30.1	30.1	30.1	30.1	30.1	30.1	34.4	34.4	34.4	34.4	34.4	34.4	34.4	34.4	34.4	m
°	5	20	40	5	20	40	5	20	40	5	20	40	5	20	40	5	20	40	5	20	40	5	20	40	°
3.0																									3.0
3.5																									3.5
4.0																									4.0
4.5																									4.5
5.0																									5.0
6.0																									6.0
7.0																									7.0
8.0																									8.0
9.0																									9.0
10.0	3.5																								10.0
11.0	3.5																								11.0
12.0	3.5			3.3			2.6																		12.0
14.0	3.5			3.3			2.6			3.1			2.9			2.9			2.8			2.3			14.0
16.0	3.5	3.0		3.3			2.6			3.1			2.9			2.9			2.8			2.3			16.0
18.0	3.2	2.7		3.3	3.0		2.6	2.6		3.1	3.0		2.9	2.9		2.9			2.8			2.3			18.0
20.0	2.9	2.5		3.3	2.7		2.6	2.6		3.1	2.8		2.9	2.8		2.9	2.8		2.8	2.8		2.3	2.3		20.0
22.0	2.6	2.2		3.3	2.5		2.6	2.5		3.1	2.6		2.9	2.6		2.9	2.6		2.8	2.6		2.3	2.3		22.0
24.0	2.3	2.0	1.7	3.0	2.3		2.6	2.3		3.1	2.4		2.9	2.4		2.9	2.4		2.8	2.4		2.3	2.3		24.0
26.0	2.1	1.9	1.6	2.7	2.2	1.7	2.6	2.1		2.9	2.2		2.9	2.2		2.9	2.3		2.8	2.3		2.3	2.2		26.0
28.0	1.9	1.7	1.5	2.5	2.0	1.6	2.5	2.0	1.6	2.7	2.1	1.6	2.7	2.1	1.6	2.8	2.2	1.6	2.8	2.2		2.3	2.1		28.0
30.0	1.7	1.6	1.4	2.3	1.9	1.5	2.3	1.9	1.5	2.5	2.0	1.5	2.5	2.0	1.5	2.6	2.0	1.6	2.6	2.0	1.6	2.3	2.0	1.5	30.0
32.0	1.6	1.5	1.3	2.2	1.8	1.4	2.1	1.8	1.4	2.3	1.9	1.5	2.3	1.9	1.5	2.4	1.9	1.5	2.4	1.9	1.5	2.3	1.9	1.5	32.0
34.0	1.5	1.4	1.2	2.0	1.7	1.4	2.0	1.7	1.4	2.1	1.7	1.4	2.2	1.8	1.4	2.3	1.8	1.4	2.3	1.8	1.4	2.2	1.8	1.4	34.0
36.0	1.4	1.3	1.2	1.9	1.6	1.3	1.8	1.6	1.3	2.0	1.7	1.3	2.0	1.7	1.3	2.1	1.7	1.4	2.1	1.7	1.4	2.1	1.7	1.4	36.0
38.0	1.3	1.2		1.7	1.5	1.3	1.7	1.5	1.3	1.7	1.6	1.3	1.9	1.6	1.3	1.7	1.6	1.3	2.0	1.6	1.3	2.0	1.6	1.3	38.0
40.0	1.2			1.6	1.4	1.2	1.6	1.4	1.2	1.3	1.5	1.2	1.8	1.5	1.2	1.3	1.6	1.3	1.8	1.6	1.3	1.9	1.5	1.3	40.0
44.0				1.2	1.3		1.4	1.3			1.2	1.2	1.2	1.3	1.2		1.3	1.2	1.2	1.4	1.2	1.6	1.4	1.2	44.0
48.0							1.3	1.2										1.1		1.1	1.1	1.4	1.3	1.1	48.0
52.0							1.1																1.2		52.0
56.0																									56.0
60.0																									60.0
64.0																									64.0
68.0																									68.0
72.0																									72.0
1	0	0	0	46	46	46	0	0	0	92	92	92	46	46	46	92	92	92	46	46	46	0	0	0	1
2	0	0	0	46	46	46	0	0	0	46	46	46	46	46	46	46	46	46	46	46	46	0	0	0	2
3	0	0	0	46	46	46	0	0	0	46	46	46	46	46	46	46	46	46	46	46	46	46	46	46	3
4	0	0	0	0	0	0	46	46	46	0	0	0	46	46	46	46	46	46	46	46	46	92	92	92	4
5	0	0	0	0	0	0	92	92	92	0	0	0	0	0	0	0	0	0	46	46	46	92	92	92	5
ID	1	1	1	66	66	66	17	17	17	67	67	67	54	54	54	55	55	55	49	49	49	19	19	19	ID
[DEG]	0~81	40~85	56~85	42~81	49~85	63~85	26~81	42~85	64~85	53~81	54~85	60~85	48~81	54~85	60~85	56~81	58~85	58~85	51~81	52~85	58~85	48~81	48~85	59~85	[DEG]
	1	1	1	1	1	1	1	1	1	1	1	1	1	1	1	1	1	1	1	1	1	1	1	1	
	8.7t	8.7t	8.7t	8.7t	8.7t	8.7t	8.7t	8.7t	8.7t	8.7t	8.7t	8.7t	8.7t	8.7t	8.7t	8.7t	8.7t	8.7t	8.7t	8.7t	8.7t	8.7t	8.7t	8.7t	

m	43.0	43.0	43.0	43.0	43.0	43.0	47.4	47.4	47.4	47.4	47.4	47.4	51.7	51.7	51.7	51.7	51.7	51.7	56.0	56.0	56.0	60.0	60.0	60.0	m
°	5	20	40	5	20	40	5	20	40	5	20	40	5	20	40	5	20	40	5	20	40	5	20	40	°
3.0																									3.0
3.5																									3.5
4.0																									4.0
4.5																									4.5
5.0																									5.0
6.0																									6.0
7.0																									7.0
8.0																									8.0
9.0																									9.0
10.0																									10.0
11.0																									11.0
12.0																									12.0
14.0																									14.0
16.0	2.7			2.1																					16.0
18.0	2.7			2.1			2.4			2.2			2.2			2.1									18.0
20.0	2.7			2.1			2.4			2.2			2.2			2.1									20.0
22.0	2.7	2.6		2.1	2.1		2.4	2.4		2.2	2.2		2.2			2.1			2.1			1.6			22.0
24.0	2.7	2.5		2.1	2.1		2.4	2.4		2.2	2.2		2.2	2.2		2.1	2.1		2.1	2.1		1.6			24.0
26.0	2.7	2.3		2.1	2.1		2.4	2.3		2.2	2.2		2.2	2.2		2.1	2.1		2.1	2.1		1.6	1.6		26.0
28.0	2.7	2.2		2.1	2.1		2.4	2.2		2.2	2.2		2.2	2.2		2.1	2.1		2.1	2.1		1.6	1.6		28.0
30.0	2.7	2.1	1.6	2.1	2.1		2.4	2.1		2.2	2.1		2.2	2.1		2.1	2.1		2.1	2.1		1.6	1.6		30.0
32.0	2.6	2.0	1.5	2.1	2.0	1.5	2.4	2.0	1.5	2.2	2.0	1.5	2.2	2.0		2.1	2.0		2.1	2.0		1.6	1.6		32.0
34.0	2.4	1.9	1.4	2.1	1.9	1.4	2.3	1.9	1.5	2.2	1.9	1.4	2.2	1.9	1.4	2.1	1.9	1.4	2.1	1.9	1.4	1.6	1.6		34.0
36.0	1.9	1.8	1.4	2.1	1.8	1.4	1.9	1.8	1.4	2.2	1.8	1.4	1.9	1.9	1.4	2.1	1.8	1.4	1.9	1.9	1.4		1.6		36.0
38.0	1.5	1.7	1.3	2.1	1.7	1.3	1.5	1.8	1.4	1.8	1.8	1.4		1.8	1.4	1.9	1.8	1.4	1.5	1.8	1.4		1.6		38.0
40.0		1.7	1.3	2.0	1.6	1.3		1.7	1.3	1.5	1.7	1.3		1.7	1.3	1.5	1.7	1.3		1.7	1.3				40.0
44.0			1.2	1.5	1.5	1.2			1.2		1.4	1.2			1.2		1.5	1.2			1.2				44.0
48.0			1.2		1.4	1.2						1.2						1.2			1.2				48.0
52.0						1.1																			52.0
56.0																									56.0
60.0																									60.0
64.0																									64.0
68.0																									68.0
72.0																									72.0
1	92	92	92	0	0	0	92	92	92	46	46	46	92	92	92	46	46	46	92	92	92	100	100		1
2	92	92	92	46	46	46	92	92	92	92	92	92	92	92	92	92	92	92	92	92	92	100	100		2
3	46	46	46	92	92	92	92	92	92	92	92	92	92	92	92	92	92	92	92	92	92	100	100		3
4	46	46	46	92	92	92	46	46	46	92	92	92	92	92	92	92	92	92	92	92	92	100	100		4
5	46	46	46	92	92	92	46	46	46	46	46	46	46	46	46	92	92	92	92	92	92	100	100		5
ID	42	42	42	21	21	21	38	38	38	31	31	31	32	32	32	23	23	23	24	24	24	16	16		ID
[DEG]	64~81	68~85	65~85	60~81	61~85	61~85	66~81	70~85	72~85	65~81	67~85	68~85	70~81	72~85	74~85	67~81	69~85	71~85	70~81	74~85	73~85	74~81	77~85		[DEG]
	1	1	1	1	1	1	1	1	1	1	1	1	1	1	1	1	1	1	1	1	1	1	1		
	8.7t	8.7t	8.7t	8.7t	8.7t	8.7t	8.7t	8.7t	8.7t	8.7t	8.7t	8.7t	8.7t	8.7t	8.7t	8.7t	8.7t	8.7t	8.7t	8.7t	8.7t	8.7t	8.7t		

油圧チルトジブ

HLJ	1.0m + 2.8m	15.4 t	8.0m x 5.0m	360 °	JPN

m	12.8	12.8	12.8	25.8	25.8	25.8	25.8	25.8	25.8	30.1	30.1	30.1	30.1	30.1	30.1	34.4	34.4	34.4	34.4	34.4	34.4	34.4	34.4	34.4	m
°	5	20	40	5	20	40	5	20	40	5	20	40	5	20	40	5	20	40	5	20	40	5	20	40	°
3.0		31.6	25.3																						3.0
3.5	38.1	30.3	24.6		31.4			25.0																	3.5
4.0	36.1	29.1	23.9		30.6	23.4		24.2						31.2											4.0
4.5	34.3	28.0	23.3		29.8	23.1		23.3	21.5		30.2			30.4											4.5
5.0	32.7	27.0	22.8		29.0	22.7		22.4	20.6		29.5	22.8		29.8	22.9		29.9			24.9			16.9		5.0
6.0	29.9	25.3	21.8		27.7	22.0		20.5	19.0		28.3	22.2		28.5	22.3		28.9	22.5		24.9	23.0		16.9	16.9	6.0
7.0	27.7	23.8	20.9		26.5	21.3		18.9	17.7		27.1	21.6		27.4	21.7		27.9	22.0		24.9	22.4		16.9	16.9	7.0
8.0	25.7	22.6	20.2	26.3	25.4	20.8	18.6	17.5	16.5		26.1	21.1		26.3	21.2		26.9	21.5		24.3	21.9		16.9	16.7	8.0
9.0	22.1	21.5		21.3	21.8	20.2	17.3	16.3	15.5	20.7	21.3	20.6	21.8	22.3	20.7		21.8	21.0		23.1	20.9		16.2	15.9	9.0
10.0	18.4	18.7		17.6	18.0	18.5	16.1	15.3	14.6	17.0	17.5	18.0	18.1	18.5	19.0		18.0	18.5	18.9	19.3	19.7		15.3	14.9	10.0
11.0	15.5	15.7		14.8	15.1	15.5	15.1	14.4	13.7	14.2	14.6	15.1	15.2	15.6	16.0	14.7	15.1	15.6	16.0	16.3	16.7	14.8	14.4	14.0	11.0
12.0	13.2	13.4		12.5	12.9	13.2	14.2	13.6	13.0	12.0	12.4	12.8	13.0	13.3	13.7	12.5	12.8	13.2	13.7	14.0	14.4	13.9	13.5	13.2	12.0
14.0				9.2	9.5	9.7	11.5	11.7	11.8	8.7	9.0	9.3	9.7	9.9	10.2	9.2	9.5	9.8	10.4	10.6	10.9	11.8	12.0	11.8	14.0
16.0				6.9	7.1	7.3	9.1	9.3	9.4	6.4	6.7	6.9	7.4	7.6	7.8	6.9	7.1	7.3	8.0	8.2	8.4	9.4	9.6	9.7	16.0
18.0				5.2	5.4		7.4	7.5		4.7	4.9	5.1	5.6	5.8	6.0	5.2	5.4	5.5	6.3	6.4	6.6	7.6	7.8	7.9	18.0
20.0				3.9	4.0		6.0	6.1		3.4	3.6		4.3	4.4		3.8	4.0	4.1	4.9	5.0	5.2	6.2	6.4	6.5	20.0
22.0				2.9	2.9		4.9	5.0		2.4	2.5		3.3	3.4		2.8	2.9		3.8	4.0		5.2	5.2		22.0
24.0				2.0			4.1			1.5	1.6		2.4	2.5		1.9	2.1		3.0	3.1		4.3	4.3		24.0
26.0													1.7	1.8		1.2	1.3		2.2	2.3		3.5	3.6		26.0
28.0																			1.6	1.7		2.9	2.9		28.0
30.0																						2.4			30.0
32.0																						1.9			32.0
34.0																									34.0
36.0																									36.0
38.0																									38.0
40.0																									40.0
44.0																									44.0
48.0																									48.0
52.0																									52.0
56.0																									56.0
60.0																									60.0
64.0																									64.0
68.0																									68.0
72.0																									72.0
1	0	0	0	46	46	46	0	0	0	92	92	92	46	46	46	92	92	92	46	46	46	0	0	0	1
2	0	0	0	46	46	46	0	0	0	46	46	46	46	46	46	46	46	46	46	46	46	0	0	0	2
3	0	0	0	46	46	46	0	0	0	46	46	46	46	46	46	46	46	46	46	46	46	46	46	46	3
4	0	0	0	0	0	0	46	46	46	0	0	0	46	46	46	46	46	46	46	46	46	92	92	92	4
5	0	0	0	0	0	0	92	92	92	0	0	0	0	0	0	0	0	0	46	46	46	92	92	92	5
ID	1	1	1	66	66	66	17	17	17	67	67	67	54	54	54	55	55	55	49	49	49	19	19	19	ID
[DEG]	0~76	34~85	58~85	28~76	37~85	56~85	28~76	38~85	56~85	41~76	42~85	57~85	35~76	36~85	57~85	44~76	45~85	58~85	39~76	40~85	58~85	28~76	41~85	59~85	[DEG]
	5	5	5	4	4	4	3	3	3	4	4	4	4	4	4	4	4	4	3	3	3	2	2	2	
	60t	60t	60t	60t	60t	60t	26t	26t	26t	60t	60t	60t	60t	60t	60t	60t	60t	60t	26t	26t	26t	26t	26t	26t	

m	43.0	43.0	43.0	43.0	43.0	43.0	47.4	47.4	47.4	47.4	47.4	47.4	51.7	51.7	51.7	51.7	51.7	51.7	56.0	56.0	56.0	60.0	60.0	60.0	m
°	5	20	40	5	20	40	5	20	40	5	20	40	5	20	40	5	20	40	5	20	40	5	20	40	°
3.0																									3.0
3.5																									3.5
4.0																									4.0
4.5																									4.5
5.0																									5.0
6.0																									6.0
7.0		17.1	17.1		12.1	12.1		13.9			12.4														7.0
8.0		17.1	17.1		12.1	12.1		13.9	13.9		12.4	12.4		11.1			9.8								8.0
9.0		17.1	17.1		12.1	12.1		13.9	13.9		12.4	12.4		11.1	11.1		9.8	9.8		9.0	9.0		7.8		9.0
10.0		17.1	17.1		12.1	12.1		13.9	13.9		12.4	12.4		11.1	11.1		9.8	9.8		9.0	9.0		7.8	7.8	10.0
11.0		15.8	16.2		12.1	12.1		13.9	13.9		12.4	12.4		11.1	11.1		9.8	9.8		9.0	9.0		7.8	7.8	11.0
12.0		13.5	13.9		12.1	12.1		13.6	13.9		12.4	12.4		11.1	11.1		9.8	9.8		9.0	9.0		7.8	7.8	12.0
14.0	9.8	10.1	10.4	11.5	11.8	12.0		10.2	10.5		10.9	11.1		10.5	10.7		9.8	9.8		9.0	9.0		7.8	7.8	14.0
16.0	7.5	7.7	7.9	9.1	9.3	9.5	7.6	7.8	8.1	8.2	8.5	8.7	7.8	8.0	8.3	8.5	8.7	9.0		8.3	8.6		7.8	7.8	16.0
18.0	5.7	5.9	6.1	7.3	7.5	7.6	5.8	6.0	6.3	6.5	6.7	6.8	6.1	6.3	6.5	6.8	6.9	7.1	6.4	6.6	6.7		6.5	6.7	18.0
20.0	4.4	4.6	4.7	6.0	6.1	6.2	4.5	4.7	4.8	5.1	5.3	5.4	4.7	4.9	5.1	5.4	5.6	5.7	5.0	5.2	5.3	5.0	5.2	5.3	20.0
22.0	3.3	3.5	3.6	4.9	5.0	5.1	3.4	3.6	3.7	4.1	4.2	4.3	3.7	3.8	3.9	4.3	4.5	4.6	3.9	4.1	4.2	3.9	4.1	4.2	22.0
24.0	2.5	2.6	2.7	4.0	4.1	4.2	2.6	2.7	2.8	3.2	3.3	3.4	2.8	2.9	3.0	3.4	3.6	3.7	3.1	3.2	3.3	3.0	3.2	3.3	24.0
26.0	1.7	1.9	1.9	3.3	3.3	3.4	1.9	2.0	2.1	2.5	2.6	2.6	2.1	2.2	2.3	2.7	2.8	2.9	2.3	2.4	2.6	2.3	2.4	2.5	26.0
28.0				2.6	2.7					1.8	1.9	2.0		1.6	1.6	2.1	2.2	2.3	1.7	1.8	1.9		1.8	1.9	28.0
30.0				2.1	2.2					1.3	1.4					1.6	1.7	1.7							30.0
32.0				1.6	1.7																				32.0
34.0				1.3	1.3																				34.0
36.0																									36.0
38.0																									38.0
40.0																									40.0
44.0																									44.0
48.0																									48.0
52.0																									52.0
56.0																									56.0
60.0																									60.0
64.0																									64.0
68.0																									68.0
72.0																									72.0
1	92	92	92	0	0	0	92	92	92	46	46	46	92	92	92	46	46	46	92	92	92	100	100	100	1
2	92	92	92	46	46	46	92	92	92	92	92	92	92	92	92	92	92	92	92	92	92	100	100	100	2
3	46	46	46	92	92	92	92	92	92	92	92	92	92	92	92	92	92	92	92	92	92	100	100	100	3
4	46	46	46	92	92	92	46	46	46	92	92	92	92	92	92	92	92	92	92	92	92	100	100	100	4
5	46	46	46	92	92	92	46	46	46	46	46	46	46	46	46	92	92	92	92	92	92	100	100	100	5
ID	42	42	42	21	21	21	38	38	38	31	31	31	32	32	32	23	23	23	24	24	24	16	16	16	ID
[DEG]	55~76	56~85	57~85	42~76	42~85	57~85	59~76	60~85	60~85	53~76	54~85	58~85	62~76	61~85	61~85	57~76	58~85	58~85	63~76	63~85	64~85	67~76	66~85	66~85	[DEG]
	2	2	2	2	2	2	2	2	2	2	2	2	2	2	2	2	2	2	2	2	2	2	2	2	
	26t	26t	26t	26t	26t	26t	26t	26t	26t	26t	26t	26t	26t	26t	26t	26t	26t	26t	26t	26t	26t	26t	26t	26t	

HLJ	1.0m + 9.2m	15.4 t	8.0m x 5.0m	360 °	JPN

m	12.8	12.8	12.8	25.8	25.8	25.8	25.8	25.8	25.8	30.1	30.1	30.1	30.1	30.1	30.1	34.4	34.4	34.4	34.4	34.4	34.4	34.4	34.4	34.4	m
°	5	20	40	5	20	40	5	20	40	5	20	40	5	20	40	5	20	40	5	20	40	5	20	40	°
3.0																									3.0
3.5																									3.5
4.0	15.0																								4.0
4.5	15.0																								4.5
5.0	15.0	13.5																							5.0
6.0	15.0	12.4			14.4			14.1																	6.0
7.0	14.8	11.4	8.9	15.0	13.5		14.3	13.3			13.6			13.8			13.8			13.4					7.0
8.0	13.4	10.6	8.4	15.0	12.8		14.3	12.5		15.0	12.9		15.0	13.1			13.2			13.3			10.1		8.0
9.0	12.2	9.9	8.0	15.0	12.1	8.7	14.0	11.9	8.6	15.0	12.3	8.8	15.0	12.5	8.8	15.0	12.6		13.4	12.7			10.1		9.0
10.0	11.2	9.2	7.6	15.0	11.5	8.4	13.2	11.3	8.4	15.0	11.8	8.5	15.0	11.9	8.6	15.0	12.1	8.6	13.4	12.2	8.6	10.1	10.1		10.0
11.0	10.4	8.7	7.3	15.0	10.9	8.2	12.5	10.8	8.1	15.0	11.3	8.3	15.0	11.4	8.3	15.0	11.6	8.4	13.4	11.7	8.4	10.1	10.1	8.3	11.0
12.0	9.6	8.2	7.0	13.7	10.4	7.9	11.7	10.3	7.9	12.9	10.8	8.1	13.9	10.9	8.1	13.2	11.1	8.2	13.4	11.2	8.2	10.1	10.1	8.1	12.0
14.0	8.4	7.4	6.5	10.3	9.6	7.5	10.3	9.4	7.4	9.7	10.0	7.7	10.6	10.1	7.7	9.9	10.3	7.8	10.9	10.4	7.8	10.1	9.9	7.8	14.0
16.0	7.5	6.8		8.0	8.7	7.1	9.1	8.4	7.1	7.4	8.2	7.3	8.2	8.9	7.3	7.6	8.4	7.5	8.5	9.2	7.5	9.7	9.2	7.4	16.0
18.0	6.8			6.3	6.9	6.8	8.0	7.6	6.8	5.6	6.3	7.0	6.5	7.1	7.0	5.9	6.6	7.2	6.8	7.4	7.2	7.9	8.4	7.1	18.0
20.0				4.9	5.4	6.0	6.7	6.9	6.5	4.3	4.9	5.6	5.1	5.7	6.2	4.6	5.2	5.8	5.4	5.9	6.5	6.5	6.9	6.9	20.0
22.0				3.9	4.3	4.7	5.6	5.9	6.1	3.3	3.8	4.3	4.1	4.5	5.0	3.5	4.0	4.6	4.4	4.8	5.3	5.4	5.8	6.2	22.0
24.0				3.0	3.4		4.7	4.9		2.4	2.9	3.3	3.2	3.6	4.0	2.7	3.1	3.6	3.5	3.9	4.3	4.6	4.9	5.2	24.0
26.0				2.3	2.6		3.9	4.2		1.7	2.1		2.5	2.8		1.9	2.3	2.7	2.8	3.1	3.5	3.8	4.1	4.4	26.0
28.0				1.7	1.9		3.3	3.5			1.4		1.9	2.2		1.3	1.7		2.2	2.5		3.2	3.4		28.0
30.0				1.2			2.8						1.4	1.6					1.6	1.9		2.7	2.9		30.0
32.0																			1.2	1.4		2.2	2.4		32.0
34.0																						1.8	2.0		34.0
36.0																						1.5			36.0
38.0																						1.2			38.0
40.0																									40.0
44.0																									44.0
48.0																									48.0
52.0																									52.0
56.0																									56.0
60.0																									60.0
64.0																									64.0
68.0																									68.0
72.0																									72.0
1	0	0	0	46	46	46	0	0	0	92	92	92	46	46	46	92	92	92	46	46	46	0	0	0	1
2	0	0	0	46	46	46	0	0	0	46	46	46	46	46	46	46	46	46	46	46	46	0	0	0	2
3	0	0	0	46	46	46	0	0	0	46	46	46	46	46	46	46	46	46	46	46	46	46	46	46	3
4	0	0	0	0	0	0	46	46	46	0	0	0	46	46	46	46	46	46	46	46	46	92	92	92	4
5	0	0	0	0	0	0	92	92	92	0	0	0	0	0	0	0	0	0	46	46	46	92	92	92	5
ID	1	1	1	66	66	66	17	17	17	67	67	67	54	54	54	55	55	55	49	49	49	19	19	19	ID
[DEG]	0~79	44~85	57~85	27~79	37~85	56~85	27~79	38~85	57~85	47~79	46~85	57~85	38~79	41~85	57~85	49~79	51~85	58~85	41~79	44~85	58~85	27~79	40~85	59~85	[DEG]
	2	2	2	2	2	2	2	2	2	2	2	2	2	2	2	2	2	2	2	2	2	2	2	2	
	26t	26t	26t	26t	26t	26t	26t	26t	26t	26t	26t	26t	26t	26t	26t	26t	26t	26t	26t	26t	26t	26t	26t	26t	

m	43.0	43.0	43.0	43.0	43.0	43.0	47.4	47.4	47.4	47.4	47.4	47.4	51.7	51.7	51.7	51.7	51.7	51.7	56.0	56.0	56.0	60.0	60.0	60.0	m
°	5	20	40	5	20	40	5	20	40	5	20	40	5	20	40	5	20	40	5	20	40	5	20	40	°
3.0																									3.0
3.5																									3.5
4.0																									4.0
4.5																									4.5
5.0																									5.0
6.0																									6.0
7.0																									7.0
8.0																									8.0
9.0		10.6			7.2																				9.0
10.0		10.6			7.2			8.4			7.5														10.0
11.0		10.6			7.2			8.4			7.5			7.0			6.4			6.4					11.0
12.0	10.6	10.6	8.3	7.2	7.2	7.2		8.4			7.5			7.0			6.4			6.4			5.7		12.0
14.0	10.1	10.6	7.9	7.2	7.2	7.2	8.4	8.4	8.0	7.5	7.5	7.5		7.0	7.0	6.4	6.4	6.4		6.4			5.7		14.0
16.0	7.8	8.6	7.6	7.2	7.2	7.2	8.0	8.4	7.7	7.5	7.5	7.5	7.0	7.0	7.0	6.4	6.4	6.4	6.4	6.4	6.4		5.7	5.7	16.0
18.0	6.1	6.8	7.4	7.2	7.2	7.2	6.3	7.0	7.4	6.9	7.5	7.5	6.4	7.0	7.0	6.4	6.4	6.4	6.4	6.4	6.4	5.7	5.7	5.7	18.0
20.0	4.7	5.3	6.0	6.3	6.8	7.1	4.9	5.6	6.3	5.5	6.1	6.7	5.1	5.7	6.4	5.7	6.3	6.4	5.3	5.9	6.4	5.3	5.7	5.7	20.0
22.0	3.7	4.2	4.8	5.2	5.6	6.1	3.9	4.4	5.0	4.4	4.9	5.5	4.0	4.5	5.1	4.6	5.1	5.6	4.2	4.7	5.3	4.2	4.7	5.3	22.0
24.0	2.8	3.3	3.8	4.3	4.7	5.1	3.0	3.5	4.0	3.5	4.0	4.5	3.1	3.6	4.1	3.7	4.2	4.6	3.4	3.8	4.3	3.3	3.8	4.3	24.0
26.0	2.1	2.5	3.0	3.6	3.9	4.2	2.3	2.7	3.2	2.8	3.2	3.6	2.4	2.8	3.3	3.0	3.4	3.8	2.6	3.0	3.5	2.6	3.0	3.5	26.0
28.0	1.5	1.9	2.3	3.0	3.2	3.5	1.7	2.1	2.5	2.2	2.5	2.9	1.8	2.2	2.6	2.4	2.7	3.1	2.0	2.4	2.8	2.0	2.4	2.8	28.0
30.0			1.7	2.4	2.7	2.9		1.5	1.9	1.7	2.0	2.3		1.6	2.0	1.9	2.2	2.5		1.8	2.2		1.8	2.2	30.0
32.0				2.0	2.2	2.4					1.5	1.8			1.5	1.4	1.7	2.0			1.7			1.7	32.0
34.0				1.6	1.8							1.3						1.5							34.0
36.0				1.2	1.4																				36.0
38.0																									38.0
40.0																									40.0
44.0																									44.0
48.0																									48.0
52.0																									52.0
56.0																									56.0
60.0																									60.0
64.0																									64.0
68.0																									68.0
72.0																									72.0
1	92	92	92	0	0	0	92	92	92	46	46	46	92	92	92	46	46	46	92	92	92	100	100	100	1
2	92	92	92	46	46	46	92	92	92	92	92	92	92	92	92	92	92	92	92	92	92	100	100	100	2
3	46	46	46	92	92	92	92	92	92	92	92	92	92	92	92	92	92	92	92	92	92	100	100	100	3
4	46	46	46	92	92	92	46	46	46	92	92	92	92	92	92	92	92	92	92	92	92	100	100	100	4
5	46	46	46	92	92	92	46	46	46	46	46	46	46	46	46	92	92	92	92	92	92	100	100	100	5
ID	42	42	42	21	21	21	38	38	38	31	31	31	32	32	32	23	23	23	24	24	24	16	16	16	ID
[DEG]	57~79	60~85	59~85	46~79	49~85	57~85	61~79	61~85	63~85	58~79	58~85	58~85	64~79	63~85	63~85	59~79	61~85	61~85	66~79	66~85	66~85	68~79	68~85	68~85	[DEG]
	2	2	2	1	1	1	1	1	1	1	1	1	1	1	1	1	1	1	1	1	1	1	1	1	
	26t	26t	26t	8.7t	8.7t	8.7t	8.7t	8.7t	8.7t	8.7t	8.7t	8.7t	8.7t	8.7t	8.7t	8.7t	8.7t	8.7t	8.7t	8.7t	8.7t	8.7t	8.7t	8.7t	

油圧チルトジブ

HLJ	1.0m + 17.0m	15.4 t	8.0m x 5.0m	360 °	JPN

m	12.8	12.8	12.8	25.8	25.8	25.8	25.8	25.8	25.8	30.1	30.1	30.1	30.1	30.1	30.1	34.4	34.4	34.4	34.4	34.4	34.4	34.4	34.4	34.4	m
°	5	20	40	5	20	40	5	20	40	5	20	40	5	20	40	5	20	40	5	20	40	5	20	40	°
3.0																									3.0
3.5																									3.5
4.0																									4.0
4.5																									4.5
5.0																									5.0
6.0	7.3																								6.0
7.0	6.8																								7.0
8.0	6.4	5.4		7.0			5.6																		8.0
9.0	6.0	5.1		6.7			5.6			6.7			6.5												9.0
10.0	5.7	4.8		6.4	5.0		5.6	4.8		6.5			6.3			6.3			5.9			4.6			10.0
11.0	5.3	4.6		6.1	4.8		5.6	4.6		6.2	4.9		6.1	4.8		6.1	4.8		5.9	4.7		4.6			11.0
12.0	5.1	4.4		5.8	4.7		5.5	4.5		6.0	4.7		5.9	4.6		5.9	4.7		5.7	4.6		4.6	4.4		12.0
14.0	4.6	4.0	3.5	5.4	4.4		5.1	4.2		5.5	4.4		5.4	4.4		5.5	4.4		5.4	4.3		4.6	4.2		14.0
16.0	4.2	3.7	3.3	5.0	4.1	3.4	4.8	3.9	3.3	5.1	4.2	3.4	5.1	4.1	3.4	5.2	4.2	3.4	5.1	4.1		4.6	4.0		16.0
18.0	3.8	3.4	3.1	4.6	3.9	3.3	4.4	3.7	3.2	4.8	3.9	3.3	4.8	3.9	3.3	4.9	3.9	3.3	4.8	3.9	3.2	4.6	3.8	3.2	18.0
20.0	3.5	3.2	3.0	4.3	3.7	3.1	4.2	3.5	3.1	4.5	3.7	3.2	4.5	3.7	3.2	4.6	3.8	3.2	4.5	3.7	3.1	4.3	3.6	3.1	20.0
22.0	3.3	3.1	2.9	4.1	3.5	3.0	3.9	3.4	3.0	4.3	3.6	3.1	4.2	3.5	3.0	4.3	3.6	3.1	4.3	3.5	3.0	4.1	3.5	3.0	22.0
24.0	3.1	2.9		3.8	3.3	2.9	3.7	3.2	2.9	3.5	3.4	3.0	4.0	3.4	2.9	3.6	3.5	3.0	4.0	3.4	2.9	3.9	3.3	2.9	24.0
26.0	3.0			3.3	3.2	2.9	3.5	3.1	2.8	2.7	3.3	2.9	3.3	3.2	2.9	2.8	3.3	2.9	3.5	3.3	2.9	3.7	3.2	2.8	26.0
28.0				2.7	3.1	2.8	3.4	3.0	2.7	2.1	2.7	2.8	2.7	3.1	2.8	2.2	2.8	2.8	2.9	3.2	2.8	3.6	3.1	2.7	28.0
30.0				2.1	2.6		3.2	2.9		1.6	2.1	2.7	2.2	2.7	2.7	1.7	2.2	2.8	2.3	2.8	2.7	3.2	3.0	2.7	30.0
32.0				1.6	2.0		2.9	2.8			1.6	2.1	1.7	2.1	2.6		1.7	2.2	1.9	2.3	2.7	2.7	2.9	2.6	32.0
34.0				1.2	1.6		2.5	2.7					1.3	1.7			1.2	1.7	1.5	1.9	2.3	2.3	2.6	2.6	34.0
36.0					1.1		2.2	2.3						1.3					1.1	1.4		1.9	2.2		36.0
38.0							1.8													1.1		1.6	1.9		38.0
40.0																						1.3	1.6		40.0
44.0																									44.0
48.0																									48.0
52.0																									52.0
56.0																									56.0
60.0																									60.0
64.0																									64.0
68.0																									68.0
72.0																									72.0
1	0	0	0	46	46	46	0	0	0	92	92	92	46	46	46	92	92	92	46	46	46	0	0	0	1
2	0	0	0	46	46	46	0	0	0	46	46	46	46	46	46	46	46	46	46	46	46	0	0	0	2
3	0	0	0	46	46	46	0	0	0	46	46	46	46	46	46	46	46	46	46	46	46	46	46	46	3
4	0	0	0	0	0	0	46	46	46	0	0	0	46	46	46	46	46	46	46	46	46	92	92	92	4
5	0	0	0	0	0	0	92	92	92	0	0	0	0	0	0	0	0	0	46	46	46	92	92	92	5
ID	1	1	1	66	66	66	17	17	17	67	67	67	54	54	54	55	55	55	49	49	49	19	19	19	ID
[DEG]	0~81	41~85	56~85	36~81	36~85	59~85	26~81	37~85	60~85	50~81	52~85	56~85	43~81	44~85	57~85	55~81	53~85	57~85	46~81	46~85	58~85	39~81	44~85	58~85	[DEG]
	1	1	1	1	1	1	1	1	1	1	1	1	1	1	1	1	1	1	1	1	1	1	1	1	
	8.7t	8.7t	8.7t	8.7t	8.7t	8.7t	8.7t	8.7t	8.7t	8.7t	8.7t	8.7t	8.7t	8.7t	8.7t	8.7t	8.7t	8.7t	8.7t	8.7t	8.7t	8.7t	8.7t	8.7t	

m	43.0	43.0	43.0	43.0	43.0	43.0	47.4	47.4	47.4	47.4	47.4	47.4	51.7	51.7	51.7	51.7	51.7	51.7	56.0	56.0	56.0	60.0	60.0	60.0	m
°	5	20	40	5	20	40	5	20	40	5	20	40	5	20	40	5	20	40	5	20	40	5	20	40	°
3.0																									3.0
3.5																									3.5
4.0																									4.0
4.5																									4.5
5.0																									5.0
6.0																									6.0
7.0																									7.0
8.0																									8.0
9.0																									9.0
10.0																									10.0
11.0																									11.0
12.0	5.5			4.1																					12.0
14.0	5.4	4.3		4.1	4.1		4.7	4.2		4.3	4.2		4.1			3.9									14.0
16.0	5.1	4.1		4.1	3.9		4.7	4.1		4.3	4.0		4.1	4.0		3.9	3.9		3.9	3.8		3.6	3.6		16.0
18.0	4.8	3.9	3.2	4.1	3.8		4.7	3.9		4.3	3.8		4.1	3.8		3.9	3.7		3.9	3.7		3.6	3.6		18.0
20.0	4.6	3.8	3.1	4.1	3.6	3.1	4.6	3.7	3.1	4.3	3.7	3.1	4.1	3.7	3.1	3.9	3.6	3.0	3.9	3.6		3.6	3.5		20.0
22.0	4.4	3.6	3.0	4.1	3.5	3.0	4.4	3.6	3.0	4.3	3.5	3.0	4.1	3.5	3.0	3.9	3.5	2.9	3.9	3.5	2.9	3.6	3.4	2.9	22.0
24.0	3.6	3.5	3.0	4.0	3.3	2.9	3.5	3.5	2.9	4.0	3.4	2.9	3.6	3.4	2.9	3.9	3.4	2.9	3.8	3.3	2.9	3.6	3.3	2.8	24.0
26.0	2.8	3.3	2.9	3.8	3.2	2.8	2.8	3.3	2.9	3.3	3.3	2.8	2.9	3.3	2.8	3.4	3.2	2.8	3.0	3.2	2.8	3.0	3.2	2.8	26.0
28.0	2.2	2.9	2.8	3.3	3.1	2.7	2.2	2.9	2.8	2.6	3.2	2.8	2.3	2.9	2.8	2.8	3.1	2.7	2.4	3.1	2.7	2.3	3.0	2.7	28.0
30.0	1.7	2.3	2.8	2.8	3.0	2.7	1.7	2.3	2.7	2.1	2.7	2.7	1.7	2.3	2.7	2.2	2.8	2.7	1.9	2.5	2.7	1.8	2.4	2.6	30.0
32.0		1.8	2.4	2.3	2.7	2.6		1.7	2.4	1.6	2.1	2.7		1.8	2.4	1.8	2.3	2.6		1.9	2.6		1.9	2.5	32.0
34.0			1.8	1.9	2.3	2.6			1.9		1.7	2.2			1.9		1.8	2.3		1.5	2.1			2.0	34.0
36.0			1.4	1.6	1.9	2.3			1.4		1.3	1.8			1.5		1.4	1.9			1.6			1.6	36.0
38.0				1.2	1.5	1.9						1.4						1.5							38.0
40.0					1.2																				40.0
44.0																									44.0
48.0																									48.0
52.0																									52.0
56.0																									56.0
60.0																									60.0
64.0																									64.0
68.0																									68.0
72.0																									72.0
1	92	92	92	0	0	0	92	92	92	46	46	46	92	92	92	46	46	46	92	92	92	100	100	100	1
2	92	92	92	46	46	46	92	92	92	92	92	92	92	92	92	92	92	92	92	92	92	100	100	100	2
3	46	46	46	92	92	92	92	92	92	92	92	92	92	92	92	92	92	92	92	92	92	100	100	100	3
4	46	46	46	92	92	92	46	46	46	92	92	92	92	92	92	92	92	92	92	92	92	100	100	100	4
5	46	46	46	92	92	92	46	46	46	46	46	46	46	46	46	92	92	92	92	92	92	100	100	100	5
ID	42	42	42	21	21	21	38	38	38	31	31	31	32	32	32	23	23	23	24	24	24	16	16	16	ID
[DEG]	61~81	63~85	62~85	52~81	53~85	60~85	64~81	66~85	65~85	62~81	61~85	62~85	66~81	68~85	67~85	65~81	64~85	65~85	68~81	68~85	70~85	70~81	72~85	71~85	[DEG]
	1	1	1	1	1	1	1	1	1	1	1	1	1	1	1	1	1	1	1	1	1	1	1	1	
	8.7t	8.7t	8.7t	8.7t	8.7t	8.7t	8.7t	8.7t	8.7t	8.7t	8.7t	8.7t	8.7t	8.7t	8.7t	8.7t	8.7t	8.7t	8.7t	8.7t	8.7t	8.7t	8.7t	8.7t	

HLJ	1.0m + 24.0m	15.4 t	8.0m x 5.0m	360 °	JPN

m	12.8	12.8	12.8	25.8	25.8	25.8	25.8	25.8	25.8	30.1	30.1	30.1	30.1	30.1	30.1	34.4	34.4	34.4	34.4	34.4	34.4	34.4	34.4	34.4	m
°	5	20	40	5	20	40	5	20	40	5	20	40	5	20	40	5	20	40	5	20	40	5	20	40	°
3.0																									3.0
3.5																									3.5
4.0																									4.0
4.5																									4.5
5.0																									5.0
6.0																									6.0
7.0																									7.0
8.0	5.1																								8.0
9.0	5.1																								9.0
10.0	5.1			4.9			3.7																		10.0
11.0	5.1			4.9			3.7			4.6			4.3												11.0
12.0	5.1	4.5		4.9			3.7			4.6			4.3			4.2			4.0			3.2			12.0
14.0	4.8	4.0		4.9	4.4		3.7	3.7		4.6	4.4		4.3	4.3		4.2			4.0			3.2			14.0
16.0	4.3	3.6		4.9	4.1		3.7	3.7		4.6	4.1		4.3	4.1		4.2	4.1		4.0	4.0		3.2	3.2		16.0
18.0	3.8	3.3		4.6	3.8		3.7	3.7		4.6	3.8		4.3	3.9		4.2	3.9		4.0	3.8		3.2	3.2		18.0
20.0	3.4	3.0	2.6	4.3	3.5		3.7	3.4		4.4	3.6		4.3	3.6		4.2	3.6		4.0	3.7		3.2	3.2		20.0
22.0	3.1	2.7	2.4	4.1	3.2	2.6	3.7	3.2	2.5	4.2	3.3	2.6	4.2	3.4	2.6	4.2	3.4	2.6	4.0	3.4		3.2	3.2		22.0
24.0	2.8	2.5	2.2	3.7	3.0	2.4	3.7	3.0	2.4	4.0	3.1	2.5	4.0	3.1	2.5	4.0	3.2	2.5	3.9	3.2	2.5	3.2	3.2	2.5	24.0
26.0	2.6	2.3	2.1	3.5	2.8	2.3	3.4	2.8	2.3	3.2	2.9	2.4	3.7	3.0	2.4	3.3	3.0	2.4	3.8	3.1	2.4	3.2	3.0	2.4	26.0
28.0	2.4	2.2	2.0	3.1	2.7	2.2	3.2	2.6	2.2	2.6	2.8	2.3	3.1	2.8	2.3	2.6	2.9	2.3	3.2	2.9	2.3	3.2	2.8	2.3	28.0
30.0	2.2	2.0		2.6	2.5	2.1	2.9	2.5	2.1	2.0	2.6	2.2	2.6	2.6	2.2	2.1	2.7	2.2	2.6	2.7	2.2	3.2	2.7	2.2	30.0
32.0	2.0	1.9		2.1	2.4	2.0	2.8	2.4	2.0	1.6	2.2	2.1	2.1	2.5	2.1	1.6	2.3	2.1	2.2	2.6	2.1	2.9	2.6	2.1	32.0
34.0				1.7	2.2	2.0	2.6	2.3	2.0		1.8	2.0	1.7	2.2	2.0		1.8	2.1	1.8	2.3	2.1	2.5	2.5	2.1	34.0
36.0				1.3	1.8	1.9	2.4	2.1	1.9		1.3	2.0	1.3	1.8	2.0		1.4	2.0	1.4	1.9	2.0	2.1	2.4	2.0	36.0
38.0					1.4		2.1	2.1				1.5		1.4	1.9			1.6		1.5	1.9	1.8	2.2	1.9	38.0
40.0							1.8	2.0						1.1				1.2		1.2	1.6	1.5	1.8	1.9	40.0
44.0							1.3																1.3		44.0
48.0																									48.0
52.0																									52.0
56.0																									56.0
60.0																									60.0
64.0																									64.0
68.0																									68.0
72.0																									72.0
1	0	0	0	46	46	46	0	0	0	92	92	92	46	46	46	92	92	92	46	46	46	0	0	0	1
2	0	0	0	46	46	46	0	0	0	46	46	46	46	46	46	46	46	46	46	46	46	0	0	0	2
3	0	0	0	46	46	46	0	0	0	46	46	46	46	46	46	46	46	46	46	46	46	46	46	46	3
4	0	0	0	0	0	0	46	46	46	0	0	0	46	46	46	46	46	46	46	46	46	92	92	92	4
5	0	0	0	0	0	0	92	92	92	0	0	0	0	0	0	0	0	0	46	46	46	92	92	92	5
ID	1	1	1	66	66	66	17	17	17	67	67	67	54	54	54	55	55	55	49	49	49	19	19	19	ID
[DEG]	0~81	37~85	59~85	45~81	47~85	57~85	29~81	45~85	58~85	56~81	56~85	58~85	50~81	49~85	58~85	59~81	59~85	59~85	54~81	54~85	59~85	50~81	49~85	60~85	[DEG]
	1	1	1	1	1	1	1	1	1	1	1	1	1	1	1	1	1	1	1	1	1	1	1	1	
	8.7t	8.7t	8.7t	8.7t	8.7t	8.7t	8.7t	8.7t	8.7t	8.7t	8.7t	8.7t	8.7t	8.7t	8.7t	8.7t	8.7t	8.7t	8.7t	8.7t	8.7t	8.7t	8.7t	8.7t	

m	43.0	43.0	43.0	43.0	43.0	43.0	47.4	47.4	47.4	47.4	47.4	47.4	51.7	51.7	51.7	51.7	51.7	51.7	56.0	56.0	56.0	60.0	60.0	60.0	m
°	5	20	40	5	20	40	5	20	40	5	20	40	5	20	40	5	20	40	5	20	40	5	20	40	°
3.0																									3.0
3.5																									3.5
4.0																									4.0
4.5																									4.5
5.0																									5.0
6.0																									6.0
7.0																									7.0
8.0																									8.0
9.0																									9.0
10.0																									10.0
11.0																									11.0
12.0																									12.0
14.0	3.8			2.9																					14.0
16.0	3.8			2.9			3.3			3.1			3.0			2.9									16.0
18.0	3.8	3.8		2.9	2.9		3.3	3.3		3.1	3.1		3.0	3.0		2.9			2.9						18.0
20.0	3.8	3.6		2.9	2.9		3.3	3.3		3.1	3.1		3.0	3.0		2.9	2.9		2.9	2.9		2.4			20.0
22.0	3.8	3.5		2.9	2.9		3.3	3.3		3.1	3.1		3.0	3.0		2.9	2.9		2.9	2.9		2.4	2.4		22.0
24.0	3.8	3.3	2.5	2.9	2.9		3.3	3.3		3.1	3.1		3.0	3.0		2.9	2.9		2.9	2.9		2.4	2.4		24.0
26.0	3.2	3.2	2.4	2.9	2.9	2.4	3.1	3.2	2.4	3.1	3.1	2.4	3.0	3.0		2.9	2.9		2.9	2.9		2.4	2.4		26.0
28.0	2.5	3.0	2.3	2.9	2.9	2.3	2.5	3.0	2.3	2.9	3.0	2.3	2.5	3.0	2.3	2.9	2.9	2.3	2.6	2.9	2.3	2.4	2.4		28.0
30.0	2.0	2.8	2.3	2.9	2.8	2.2	1.9	2.8	2.3	2.3	2.9	2.3	2.0	2.8	2.3	2.4	2.9	2.3	2.0	2.9	2.3	2.0	2.4	2.0	30.0
32.0	1.5	2.3	2.2	2.5	2.7	2.2		2.2	2.2	1.9	2.6	2.2		2.3	2.2	1.9	2.6	2.2		2.3	2.2		2.3	2.0	32.0
34.0		1.8	2.1	2.1	2.6	2.1		1.7	2.1	1.4	2.1	2.1		1.8	2.2	1.5	2.2	2.2		1.9	2.2		1.8	1.9	34.0
36.0		1.4	2.1	1.7	2.2	2.1			2.1		1.7	2.1			2.1		1.7	2.1			2.1			1.9	36.0
38.0			1.6	1.4	1.8	2.0			1.6			1.9			1.7		1.4	2.0			1.8			1.7	38.0
40.0					1.5	2.0						1.5						1.6			1.4				40.0
44.0						1.3																			44.0
48.0																									48.0
52.0																									52.0
56.0																									56.0
60.0																									60.0
64.0																									64.0
68.0																									68.0
72.0																									72.0
1	92	92	92	0	0	0	92	92	92	46	46	46	92	92	92	46	46	46	92	92	92	100	100	100	1
2	92	92	92	46	46	46	92	92	92	92	92	92	92	92	92	92	92	92	92	92	92	100	100	100	2
3	46	46	46	92	92	92	92	92	92	92	92	92	92	92	92	92	92	92	92	92	92	100	100	100	3
4	46	46	46	92	92	92	46	46	46	92	92	92	92	92	92	92	92	92	92	92	92	100	100	100	4
5	46	46	46	92	92	92	46	46	46	46	46	46	46	46	46	92	92	92	92	92	92	100	100	100	5
ID	42	42	42	21	21	21	38	38	38	31	31	31	32	32	32	23	23	23	24	24	24	16	16	16	ID
[DEG]	64~81	65~85	68~85	59~81	62~85	62~85	68~81	70~85	71~85	65~81	68~85	69~85	70~81	72~85	73~85	67~81	68~85	71~85	72~81	73~85	73~85	73~81	75~85	76~85	[DEG]
	1	1	1	1	1	1	1	1	1	1	1	1	1	1	1	1	1	1	1	1	1	1	1	1	
	8.7t	8.7t	8.7t	8.7t	8.7t	8.7t	8.7t	8.7t	8.7t	8.7t	8.7t	8.7t	8.7t	8.7t	8.7t	8.7t	8.7t	8.7t	8.7t	8.7t	8.7t	8.7t	8.7t	8.7t	

油圧チルトジブ

HLJ	1.0m + 31.0m	15.4 t	8.0m x 5.0m	360 °	JPN

m	12.8	12.8	12.8	25.8	25.8	25.8	25.8	25.8	25.8	30.1	30.1	30.1	30.1	30.1	30.1	34.4	34.4	34.4	34.4	34.4	34.4	34.4	34.4	34.4	m
°	5	20	40	5	20	40	5	20	40	5	20	40	5	20	40	5	20	40	5	20	40	5	20	40	°
3.0																									3.0
3.5																									3.5
4.0																									4.0
4.5																									4.5
5.0																									5.0
6.0																									6.0
7.0																									7.0
8.0																									8.0
9.0																									9.0
10.0	3.5																								10.0
11.0	3.5																								11.0
12.0	3.5			3.3			2.6																		12.0
14.0	3.5			3.3			2.6			3.1			2.9			2.9			2.8			2.3			14.0
16.0	3.5	3.0		3.3			2.6			3.1			2.9			2.9			2.8			2.3			16.0
18.0	3.2	2.7		3.3	3.0		2.6	2.6		3.1	3.0		2.9	2.9		2.9			2.8			2.3			18.0
20.0	2.9	2.5		3.3	2.7		2.6	2.6		3.1	2.8		2.9	2.8		2.9	2.8		2.8	2.8		2.3	2.3		20.0
22.0	2.6	2.2		3.3	2.5		2.6	2.5		3.1	2.6		2.9	2.6		2.9	2.6		2.8	2.6		2.3	2.3		22.0
24.0	2.3	2.0	1.7	3.0	2.3		2.6	2.3		3.1	2.4		2.9	2.4		2.9	2.4		2.8	2.4		2.3	2.3		24.0
26.0	2.1	1.9	1.6	2.7	2.2	1.7	2.6	2.1		2.9	2.2		2.9	2.2		2.9	2.3		2.8	2.3		2.3	2.2		26.0
28.0	1.9	1.7	1.5	2.5	2.0	1.6	2.5	2.0	1.6	2.7	2.1	1.6	2.7	2.1	1.6	2.8	2.2	1.6	2.8	2.2		2.3	2.1		28.0
30.0	1.7	1.6	1.4	2.3	1.9	1.5	2.3	1.9	1.5	2.4	2.0	1.5	2.5	2.0	1.5	2.4	2.0	1.6	2.6	2.0	1.6	2.3	2.0	1.5	30.0
32.0	1.6	1.5	1.3	2.2	1.8	1.4	2.1	1.8	1.4	1.9	1.9	1.5	2.3	1.9	1.5	1.9	1.9	1.5	2.4	1.9	1.5	2.3	1.9	1.5	32.0
34.0	1.5	1.4	1.2	2.0	1.7	1.4	2.0	1.7	1.4	1.5	1.7	1.4	1.9	1.8	1.4	1.4	1.8	1.4	2.0	1.8	1.4	2.2	1.8	1.4	34.0
36.0	1.4	1.3	1.2	1.6	1.6	1.3	1.8	1.6	1.3		1.7	1.3	1.5	1.7	1.3		1.7	1.4	1.6	1.7	1.4	2.1	1.7	1.4	36.0
38.0	1.3	1.2		1.3	1.5	1.3	1.7	1.5	1.3		1.4	1.3	1.2	1.6	1.3		1.4	1.3	1.2	1.6	1.3	1.9	1.6	1.3	38.0
40.0	1.2				1.4	1.2	1.6	1.4	1.2			1.2		1.4	1.2			1.3		1.5	1.3	1.6	1.5	1.3	40.0
44.0							1.4	1.3							1.2						1.2	1.1	1.4	1.2	44.0
48.0								1.2																1.1	48.0
52.0																									52.0
56.0																									56.0
60.0																									60.0
64.0																									64.0
68.0																									68.0
72.0																									72.0
1	0	0	0	46	46	46	0	0	0	92	92	92	46	46	46	92	92	92	46	46	46	0	0	0	1
2	0	0	0	46	46	46	0	0	0	46	46	46	46	46	46	46	46	46	46	46	46	0	0	0	2
3	0	0	0	46	46	46	0	0	0	46	46	46	46	46	46	46	46	46	46	46	46	46	46	46	3
4	0	0	0	0	0	0	46	46	46	0	0	0	46	46	46	46	46	46	46	46	46	92	92	92	4
5	0	0	0	0	0	0	92	92	92	0	0	0	0	0	0	0	0	0	46	46	46	92	92	92	5
ID	1	1	1	66	66	66	17	17	17	67	67	67	54	54	54	55	55	55	49	49	49	19	19	19	ID
[DEG]	0~81	40~85	56~85	51~81	56~85	63~85	44~81	42~85	64~85	60~81	62~85	66~85	55~81	60~85	60~85	62~81	65~85	69~85	58~81	63~85	64~85	53~81	59~85	59~85	[DEG]
	1	1	1	1	1	1	1	1	1	1	1	1	1	1	1	1	1	1	1	1	1	1	1	1	
	8.7t	8.7t	8.7t	8.7t	8.7t	8.7t	8.7t	8.7t	8.7t	8.7t	8.7t	8.7t	8.7t	8.7t	8.7t	8.7t	8.7t	8.7t	8.7t	8.7t	8.7t	8.7t	8.7t	8.7t	

m	43.0	43.0	43.0	43.0	43.0	43.0	47.4	47.4	47.4	47.4	47.4	47.4	51.7	51.7	51.7	51.7	51.7	51.7	56.0	56.0	56.0				m
°	5	20	40	5	20	40	5	20	40	5	20	40	5	20	40	5	20	40	5	20	40				°
3.0																									3.0
3.5																									3.5
4.0																									4.0
4.5																									4.5
5.0																									5.0
6.0																									6.0
7.0																									7.0
8.0																									8.0
9.0																									9.0
10.0																									10.0
11.0																									11.0
12.0																									12.0
14.0																									14.0
16.0	2.7			2.1																					16.0
18.0	2.7			2.1			2.4			2.2			2.2			2.1									18.0
20.0	2.7			2.1			2.4			2.2			2.2			2.1									20.0
22.0	2.7	2.6		2.1	2.1		2.4	2.4		2.2	2.2		2.2			2.1			2.1						22.0
24.0	2.7	2.5		2.1	2.1		2.4	2.4		2.2	2.2		2.2	2.2		2.1	2.1		2.1	2.1					24.0
26.0	2.7	2.3		2.1	2.1		2.4	2.3		2.2	2.2		2.2	2.2		2.1	2.1		2.1	2.1					26.0
28.0	2.7	2.2		2.1	2.1		2.4	2.2		2.2	2.2		2.2	2.2		2.1	2.1		2.1	2.1					28.0
30.0	2.2	2.1	1.6	2.1	2.1		2.1	2.1		2.2	2.1		2.1	2.1		2.1	2.1		2.1	2.1					30.0
32.0	1.7	2.0	1.5	2.1	2.0	1.5	1.7	2.0	1.5	2.0	2.0	1.5		2.0		2.1	2.0			2.0					32.0
34.0		1.9	1.4	2.1	1.9	1.4		1.9	1.5	1.6	1.9	1.4		1.9	1.4	1.6	1.9	1.4		1.9	1.4				34.0
36.0		1.7	1.4	1.8	1.8	1.4		1.7	1.4		1.8	1.4		1.7	1.4		1.8	1.4		1.8	1.4				36.0
38.0			1.3	1.5	1.7	1.3			1.4		1.6	1.4			1.4		1.6	1.4			1.4				38.0
40.0			1.3		1.6	1.3			1.3			1.3			1.3			1.3			1.3				40.0
44.0					1.1	1.2						1.2						1.2							44.0
48.0						1.1																			48.0
52.0																									52.0
56.0																									56.0
60.0																									60.0
64.0																									64.0
68.0																									68.0
72.0																									72.0
1	92	92	92	0	0	0	92	92	92	46	46	46	92	92	92	46	46	46	92	92	92				1
2	92	92	92	46	46	46	92	92	92	92	92	92	92	92	92	92	92	92	92	92	92				2
3	46	46	46	92	92	92	92	92	92	92	92	92	92	92	92	92	92	92	92	92	92				3
4	46	46	46	92	92	92	46	46	46	92	92	92	92	92	92	92	92	92	92	92	92				4
5	46	46	46	92	92	92	46	46	46	46	46	46	46	46	46	92	92	92	92	92	92				5
ID	42	42	42	21	21	21	38	38	38	31	31	31	32	32	32	23	23	23	24	24	24				ID
[DEG]	69~81	71~85	74~85	64~81	64~85	66~85	70~81	73~85	75~85	69~81	72~85	72~85	74~81	75~85	77~85	71~81	74~85	74~85	75~81	77~85	79~85				[DEG]
	1	1	1	1	1	1	1	1	1	1	1	1	1	1	1	1	1	1	1	1	1				
	8.7t	8.7t	8.7t	8.7t	8.7t	8.7t	8.7t	8.7t	8.7t	8.7t	8.7t	8.7t	8.7t	8.7t	8.7t	8.7t	8.7t	8.7t	8.7t	8.7t	8.7t				

HLJ	1.0m + 2.8m	15.4 t	8.0m x 4.1m	360 °	JPN

m	12.8	12.8	12.8	25.8	25.8	25.8	25.8	25.8	25.8	30.1	30.1	30.1	30.1	30.1	30.1	34.4	34.4	34.4	34.4	34.4	34.4	34.4	34.4	34.4	m
°	5	20	40	5	20	40	5	20	40	5	20	40	5	20	40	5	20	40	5	20	40	5	20	40	°
3.0		31.6	25.3																						3.0
3.5	38.1	30.3	24.6		31.4			25.0																	3.5
4.0	36.1	29.1	23.9		30.6	23.4		24.2						31.2											4.0
4.5	34.3	28.0	23.3		29.8	23.1		23.3	21.5		30.2			30.4											4.5
5.0	32.7	27.0	22.8		29.0	22.7		22.4	20.6		29.5	22.8		29.8	22.9		29.9			24.9			16.9		5.0
6.0	29.9	25.3	21.8		27.7	22.0		20.5	19.0		28.3	22.2		28.5	22.3		28.9	22.5		24.9	23.0		16.9	16.9	6.0
7.0	26.6	23.8	20.9		26.4	21.3		18.9	17.7		25.9	21.6		27.0	21.7		26.4	22.0		24.9	22.4		16.9	16.9	7.0
8.0	21.2	21.6	20.2	20.3	20.9	20.8	18.6	17.5	16.5		20.4	21.1		21.4	21.2		20.9	21.5		22.2	21.9		16.9	16.7	8.0
9.0	17.3	17.6		16.5	17.0	17.5	17.3	16.3	15.5	15.9	16.4	17.0	17.0	17.4	18.0		16.9	17.5		18.2	18.7		16.2	15.9	9.0
10.0	14.3	14.6		13.6	14.0	14.5	16.0	15.3	14.6	13.0	13.5	14.0	14.1	14.5	14.9		14.0	14.5	14.8	15.2	15.6		15.3	14.9	10.0
11.0	12.1	12.3		11.4	11.7	12.1	13.7	14.0	13.7	10.8	11.2	11.7	11.8	12.2	12.5	11.3	11.7	12.1	12.5	12.9	13.2	14.1	14.3	14.0	11.0
12.0	10.3	10.4		9.6	9.9	10.2	11.9	12.1	12.3	9.1	9.4	9.8	10.0	10.3	10.7	9.5	9.9	10.2	10.7	11.0	11.3	12.2	12.4	12.7	12.0
14.0				6.9	7.1	7.4	9.1	9.3	9.4	6.4	6.7	7.0	7.3	7.6	7.8	6.8	7.1	7.4	8.0	8.2	8.5	9.4	9.6	9.8	14.0
16.0				5.0	5.2	5.4	7.1	7.3	7.4	4.5	4.7	5.0	5.4	5.6	5.8	4.9	5.2	5.4	6.0	6.2	6.4	7.4	7.6	7.7	16.0
18.0				3.6	3.7		5.7	5.8		3.1	3.3	3.4	4.0	4.1	4.3	3.5	3.7	3.9	4.6	4.7	4.9	5.9	6.0	6.2	18.0
20.0				2.5	2.6		4.5	4.6		2.0	2.2		2.9	3.0		2.4	2.6	2.7	3.5	3.6	3.7	4.8	4.9	5.0	20.0
22.0				1.6	1.7		3.6	3.7					2.0	2.1		1.5	1.7		2.6	2.7		3.8	3.9		22.0
24.0							2.9						1.3	1.4					1.8	1.9		3.1	3.2		24.0
26.0																			1.2	1.3		2.5	2.5		26.0
28.0																						1.9	2.0		28.0
30.0																						1.5			30.0
32.0																						1.1			32.0
34.0																									34.0
36.0																									36.0
38.0																									38.0
40.0																									40.0
44.0																									44.0
48.0																									48.0
52.0																									52.0
56.0																									56.0
60.0																									60.0
64.0																									64.0
68.0																									68.0
72.0																									72.0
1	0	0	0	46	46	46	0	0	0	92	92	92	46	46	46	92	92	92	46	46	46	0	0	0	1
2	0	0	0	46	46	46	0	0	0	46	46	46	46	46	46	46	46	46	46	46	46	0	0	0	2
3	0	0	0	46	46	46	0	0	0	46	46	46	46	46	46	46	46	46	46	46	46	46	46	46	3
4	0	0	0	0	0	0	46	46	46	0	0	0	46	46	46	46	46	46	46	46	46	92	92	92	4
5	0	0	0	0	0	0	92	92	92	0	0	0	0	0	0	0	0	0	46	46	46	92	92	92	5
ID	1	1	1	66	66	66	17	17	17	67	67	67	54	54	54	55	55	55	49	49	49	19	19	19	ID
[DEG]	0~76	34~85	58~85	36~76	37~85	56~85	28~76	37~85	56~85	51~76	52~85	57~85	41~76	42~85	57~85	52~76	53~85	58~85	44~76	45~85	58~85	28~76	40~85	59~85	[DEG]
	5	5	5	4	4	4	3	3	3	4	4	4	4	4	4	4	4	4	3	3	3	2	2	2	
	60t	60t	60t	60t	60t	60t	26t	26t	26t	60t	60t	60t	60t	60t	60t	60t	60t	60t	26t	26t	26t	26t	26t	26t	

m	43.0	43.0	43.0	43.0	43.0	43.0	47.4	47.4	47.4	47.4	47.4	47.4	51.7	51.7	51.7	51.7	51.7	51.7	m
°	5	20	40	5	20	40	5	20	40	5	20	40	5	20	40	5	20	40	°
3.0																			3.0
3.5																			3.5
4.0																			4.0
4.5																			4.5
5.0																			5.0
6.0																			6.0
7.0		17.1	17.1		12.1	12.1		13.9			12.4								7.0
8.0		17.1	17.1		12.1	12.1		13.9	13.9		12.4	12.4		11.1			9.8		8.0
9.0		17.1	17.1		12.1	12.1		13.9	13.9		12.4	12.4		11.1	11.1		9.8	9.8	9.0
10.0		14.7	15.1		12.1	12.1		13.9	13.9		12.4	12.4		11.1	11.1		9.8	9.8	10.0
11.0		12.3	12.8		12.1	12.1		12.5	12.9		12.4	12.4		11.1	11.1		9.8	9.8	11.0
12.0		10.5	10.9		12.1	12.1		10.6	11.0		11.3	11.6		10.8	11.1		9.8	9.8	12.0
14.0	7.5	7.7	8.0	9.1	9.3	9.5		7.8	8.1		8.5	8.7		8.1	8.3		8.8	9.0	14.0
16.0	5.5	5.8	6.0	7.1	7.3	7.5	5.6	5.9	6.1	6.3	6.5	6.7	5.9	6.1	6.3	6.6	6.8	7.0	16.0
18.0	4.1	4.3	4.5	5.6	5.8	5.9	4.2	4.4	4.6	4.8	5.0	5.2	4.4	4.6	4.8	5.1	5.3	5.4	18.0
20.0	3.0	3.1	3.3	4.5	4.6	4.7	3.1	3.2	3.4	3.7	3.8	4.0	3.3	3.4	3.6	3.9	4.1	4.2	20.0
22.0	2.1	2.2	2.3	3.6	3.7	3.8	2.2	2.3	2.5	2.8	2.9	3.0	2.4	2.5	2.7	3.0	3.2	3.3	22.0
24.0			1.6	2.8	2.9	3.0			1.7	2.0	2.1	2.2			1.9	2.3	2.4	2.5	24.0
26.0				2.2	2.3	2.3					1.5	1.6				1.7	1.8	1.9	26.0
28.0				1.7	1.7														28.0
30.0				1.2	1.3														30.0
32.0																			32.0
34.0																			34.0
36.0																			36.0
38.0																			38.0
40.0																			40.0
44.0																			44.0
48.0																			48.0
52.0																			52.0
56.0																			56.0
60.0																			60.0
64.0																			64.0
68.0																			68.0
72.0																			72.0
1	92	92	92	0	0	0	92	92	92	46	46	46	92	92	92	46	46	46	1
2	92	92	92	46	46	46	92	92	92	92	92	92	92	92	92	92	92	92	2
3	46	46	46	92	92	92	92	92	92	92	92	92	92	92	92	92	92	92	3
4	46	46	46	92	92	92	46	46	46	92	92	92	92	92	92	92	92	92	4
5	46	46	46	92	92	92	46	46	46	46	46	46	46	46	46	92	92	92	5
ID	42	42	42	21	21	21	38	38	38	31	31	31	32	32	32	23	23	23	ID
[DEG]	61~76	62~85	60~85	49~76	50~85	57~85	64~76	65~85	63~85	62~76	60~85	60~85	67~76	68~85	66~85	62~76	63~85	63~85	[DEG]
	2	2	2	2	2	2	2	2	2	2	2	2	2	2	2	2	2	2	
	26t	26t	26t	26t	26t	26t	26t	26t	26t	26t	26t	26t	26t	26t	26t	26t	26t	26t	

油圧チルトジブ

HLJ	1.0m + 9.2m	15.4 t	8.0m x 4.1m	360 °	JPN

m	12.8	12.8	12.8	25.8	25.8	25.8	25.8	25.8	25.8	30.1	30.1	30.1	30.1	30.1	30.1	34.4	34.4	34.4	34.4	34.4	34.4	34.4	34.4	34.4	m
°	5	20	40	5	20	40	5	20	40	5	20	40	5	20	40	5	20	40	5	20	40	5	20	40	°
3.0																									3.0
3.5																									3.5
4.0	15.0																								4.0
4.5	15.0																								4.5
5.0	15.0	13.5																							5.0
6.0	15.0	12.4			14.4			14.1																	6.0
7.0	14.8	11.4	8.9	15.0	13.5		14.3	13.3			13.6			13.8			13.8			13.4					7.0
8.0	13.4	10.6	8.4	15.0	12.8		14.3	12.5		15.0	12.9		15.0	13.1			13.2			13.3			10.1		8.0
9.0	12.2	9.9	8.0	15.0	12.1	8.7	14.0	11.9	8.6	15.0	12.3	8.8	15.0	12.5	8.8	15.0	12.6		13.4	12.7			10.1		9.0
10.0	11.2	9.2	7.6	14.7	11.5	8.4	13.2	11.3	8.4	14.0	11.8	8.5	14.9	11.9	8.6	14.3	12.1	8.6	13.4	12.2	8.6	10.1	10.1		10.0
11.0	10.4	8.7	7.3	12.4	10.9	8.2	12.5	10.8	8.1	11.7	11.3	8.3	12.7	11.4	8.3	12.0	11.6	8.4	13.0	11.7	8.4	10.1	10.1	8.3	11.0
12.0	9.6	8.2	7.0	10.6	10.4	7.9	11.7	10.3	7.9	10.0	10.8	8.1	10.9	10.9	8.1	10.2	11.1	8.2	11.2	11.2	8.2	10.1	10.1	8.1	12.0
14.0	8.4	7.4	6.5	8.0	8.8	7.5	9.8	9.4	7.4	7.3	8.3	7.7	8.2	9.0	7.7	7.6	8.5	7.8	8.5	9.3	7.8	9.7	9.9	7.8	14.0
16.0	7.3	6.8		6.0	6.7	7.1	7.8	8.3	7.1	5.4	6.2	7.1	6.2	6.9	7.3	5.7	6.5	7.4	6.5	7.2	7.5	7.7	8.2	7.4	16.0
18.0	5.9			4.6	5.2	5.9	6.3	6.7	6.8	4.0	4.7	5.4	4.8	5.4	6.1	4.2	4.9	5.7	5.1	5.7	6.3	6.2	6.7	7.1	18.0
20.0				3.5	4.0	4.5	5.2	5.5	5.9	2.9	3.5	4.1	3.7	4.2	4.7	3.1	3.7	4.3	4.0	4.5	5.0	5.0	5.4	5.9	20.0
22.0				2.6	3.0	3.4	4.2	4.5	4.9	2.0	2.5	3.0	2.8	3.2	3.7	2.2	2.7	3.3	3.1	3.5	4.0	4.1	4.5	4.9	22.0
24.0				1.9	2.2		3.5	3.7			1.7	2.2	2.0	2.4	2.8	1.5	2.0	2.4	2.3	2.7	3.1	3.4	3.7	4.0	24.0
26.0				1.3	1.5		2.9	3.1					1.4	1.8				1.7	1.7	2.1	2.4	2.8	3.0	3.3	26.0
28.0							2.3	2.5						1.2					1.2	1.5		2.2	2.5		28.0
30.0							1.9															1.8	2.0		30.0
32.0																						1.4	1.6		32.0
34.0																						1.1	1.2		34.0
36.0																									36.0
38.0																									38.0
40.0																									40.0
44.0																									44.0
48.0																									48.0
52.0																									52.0
56.0																									56.0
60.0																									60.0
64.0																									64.0
68.0																									68.0
72.0																									72.0
% 1	0	0	0	46	46	46	0	0	0	92	92	92	46	46	46	92	92	92	46	46	46	0	0	0	1
% 2	0	0	0	46	46	46	0	0	0	46	46	46	46	46	46	46	46	46	46	46	46	0	0	0	2
% 3	0	0	0	46	46	46	0	0	0	46	46	46	46	46	46	46	46	46	46	46	46	46	46	46	3
% 4	0	0	0	0	0	0	46	46	46	0	0	0	46	46	46	46	46	46	46	46	46	92	92	92	4
% 5	0	0	0	0	0	0	92	92	92	0	0	0	0	0	0	0	0	0	46	46	46	92	92	92	5
ID	1	1	1	66	66	66	17	17	17	67	67	67	54	54	54	55	55	55	49	49	49	19	19	19	ID
[DEG]	0~79	44~85	57~85	39~79	43~85	56~85	27~79	37~85	56~85	54~79	54~85	57~85	46~79	45~85	57~85	55~79	58~85	58~85	49~79	52~85	58~85	37~79	40~85	59~85	[DEG]
	2	2	2	2	2	2	2	2	2	2	2	2	2	2	2	2	2	2	2	2	2	2	2	2	
	26t	26t	26t	26t	26t	26t	26t	26t	26t	26t	26t	26t	26t	26t	26t	26t	26t	26t	26t	26t	26t	26t	26t	26t	

m	43.0	43.0	43.0	43.0	43.0	43.0	47.4	47.4	47.4	47.4	47.4	47.4	51.7	51.7	51.7	51.7	51.7	51.7	56.0	56.0	56.0	60.0	60.0	60.0	m
°	5	20	40	5	20	40	5	20	40	5	20	40	5	20	40	5	20	40	5	20	40	5	20	40	°
3.0																									3.0
3.5																									3.5
4.0																									4.0
4.5																									4.5
5.0																									5.0
6.0																									6.0
7.0																									7.0
8.0																									8.0
9.0		10.6			7.2																				9.0
10.0		10.6			7.2			8.4			7.5														10.0
11.0		10.6			7.2			8.4			7.5			7.0			6.4			6.4					11.0
12.0	10.4	10.6	8.3	7.2	7.2	7.2		8.4			7.5			7.0			6.4			6.4			5.7		12.0
14.0	7.7	8.7	7.9	7.2	7.2	7.2	8.0	8.4	8.0	7.5	7.5	7.5		7.0	7.0	6.4	6.4	6.4		6.4			5.7		14.0
16.0	5.8	6.6	7.5	7.2	7.2	7.2	6.1	6.9	7.7	6.6	7.4	7.5	6.2	7.0	7.0	6.4	6.4	6.4	6.4	6.4	6.4		5.7	5.7	16.0
18.0	4.4	5.1	5.9	6.0	6.5	7.1	4.6	5.3	6.1	5.2	5.8	6.5	4.8	5.4	6.2	5.4	6.0	6.4	5.0	5.6	6.4	4.9	5.6	5.7	18.0
20.0	3.3	3.9	4.5	4.8	5.3	5.8	3.5	4.1	4.8	4.0	4.6	5.2	3.6	4.2	4.9	4.2	4.8	5.4	3.8	4.4	5.1	3.8	4.4	5.1	20.0
22.0	2.4	2.9	3.5	3.9	4.3	4.7	2.6	3.1	3.7	3.1	3.6	4.1	2.7	3.3	3.8	3.3	3.8	4.3	2.9	3.4	4.0	2.9	3.4	4.0	22.0
24.0	1.7	2.1	2.6	3.1	3.5	3.9	1.9	2.3	2.8	2.4	2.8	3.3	2.0	2.5	3.0	2.6	3.0	3.5	2.2	2.7	3.2	2.2	2.6	3.1	24.0
26.0			1.9	2.5	2.8	3.2		1.7	2.1	1.8	2.1	2.6		1.8	2.3	2.0	2.3	2.7		2.0	2.4		2.0	2.4	26.0
28.0				2.0	2.3	2.6					1.6	1.9			1.6		1.8	2.1			1.8			1.8	28.0
30.0				1.5	1.8	2.0						1.4						1.6							30.0
32.0					1.4	1.6																			32.0
34.0																									34.0
36.0																									36.0
38.0																									38.0
40.0																									40.0
44.0																									44.0
48.0																									48.0
52.0																									52.0
56.0																									56.0
60.0																									60.0
64.0																									64.0
68.0																									68.0
72.0																									72.0
% 1	92	92	92	0	0	0	92	92	92	46	46	46	92	92	92	46	46	46	92	92	92	100	100	100	1
% 2	92	92	92	46	46	46	92	92	92	92	92	92	92	92	92	92	92	92	92	92	92	100	100	100	2
% 3	46	46	46	92	92	92	92	92	92	92	92	92	92	92	92	92	92	92	92	92	92	100	100	100	3
% 4	46	46	46	92	92	92	46	46	46	92	92	92	92	92	92	92	92	92	92	92	92	100	100	100	4
% 5	46	46	46	92	92	92	46	46	46	46	46	46	46	46	46	92	92	92	92	92	92	100	100	100	5
ID	42	42	42	21	21	21	38	38	38	31	31	31	32	32	32	23	23	23	24	24	24	16	16	16	ID
[DEG]	62~79	65~85	65~85	55~79	55~85	57~85	65~79	65~85	68~85	63~79	63~85	63~85	68~79	68~85	68~85	65~79	65~85	65~85	70~79	70~85	70~85	71~79	71~85	72~85	[DEG]
	2	2	2	1	1	1	1	1	1	1	1	1	1	1	1	1	1	1	1	1	1	1	1	1	
	26t	26t	26t	8.7t	8.7t	8.7t	8.7t	8.7t	8.7t	8.7t	8.7t	8.7t	8.7t	8.7t	8.7t	8.7t	8.7t	8.7t	8.7t	8.7t	8.7t	8.7t	8.7t	8.7t	

HLJ	1.0m + 17.0m	15.4 t	8.0m x 4.1m	360 °	JPN

m	12.8	12.8	12.8	25.8	25.8	25.8	25.8	25.8	25.8	30.1	30.1	30.1	30.1	30.1	30.1	34.4	34.4	34.4	34.4	34.4	34.4	34.4	34.4	34.4	m
°	5	20	40	5	20	40	5	20	40	5	20	40	5	20	40	5	20	40	5	20	40	5	20	40	°
3.0																									3.0
3.5																									3.5
4.0																									4.0
4.5																									4.5
5.0																									5.0
6.0	7.3																								6.0
7.0	6.8																								7.0
8.0	6.4	5.4		7.0			5.6																		8.0
9.0	6.0	5.1		6.7			5.6			6.7			6.5												9.0
10.0	5.7	4.8		6.4	5.0		5.6	4.8		6.5			6.3			6.3			5.9			4.6			10.0
11.0	5.3	4.6		6.1	4.8		5.6	4.6		6.2	4.9		6.1	4.8		6.1	4.8		5.9	4.7		4.6			11.0
12.0	5.1	4.4		5.8	4.7		5.5	4.5		6.0	4.7		5.9	4.6		5.9	4.7		5.7	4.6		4.6	4.4		12.0
14.0	4.6	4.0	3.5	5.4	4.4		5.1	4.2		5.5	4.4		5.4	4.4		5.5	4.4		5.4	4.3		4.6	4.2		14.0
16.0	4.2	3.7	3.3	5.0	4.1	3.4	4.8	3.9	3.3	5.1	4.2	3.4	5.1	4.1	3.4	5.2	4.2	3.4	5.1	4.1		4.6	4.0		16.0
18.0	3.8	3.4	3.1	4.6	3.9	3.3	4.4	3.7	3.2	4.8	3.9	3.3	4.8	3.9	3.3	4.9	3.9	3.3	4.8	3.9	3.2	4.6	3.8	3.2	18.0
20.0	3.5	3.2	3.0	4.3	3.7	3.1	4.2	3.5	3.1	4.0	3.7	3.2	4.5	3.7	3.2	4.1	3.8	3.2	4.5	3.7	3.1	4.3	3.6	3.1	20.0
22.0	3.3	3.1	2.9	3.6	3.5	3.0	3.9	3.4	3.0	3.1	3.6	3.1	3.7	3.5	3.0	3.2	3.6	3.1	3.8	3.5	3.0	4.1	3.5	3.0	22.0
24.0	3.1	2.9		2.9	3.3	2.9	3.7	3.2	2.9	2.3	3.1	3.0	2.9	3.4	2.9	2.4	3.2	3.0	3.1	3.4	2.9	3.9	3.3	2.9	24.0
26.0	3.0			2.2	2.8	2.9	3.5	3.1	2.8	1.7	2.4	2.9	2.3	2.9	2.9	1.8	2.5	2.9	2.4	3.0	2.9	3.3	3.2	2.8	26.0
28.0				1.7	2.2	2.8	3.0	3.0	2.7		1.7	2.4	1.8	2.3	2.8		1.9	2.6	1.9	2.4	2.8	2.8	3.1	2.7	28.0
30.0				1.2	1.7		2.5	2.8				1.8	1.3	1.8	2.3			1.9	1.4	1.9	2.5	2.3	2.7	2.7	30.0
32.0					1.2		2.1	2.4				1.3		1.3	1.7			1.4		1.5	1.9	1.9	2.2	2.6	32.0
34.0							1.7	2.0													1.5	1.5	1.8	2.2	34.0
36.0							1.4	1.6														1.2	1.5		36.0
38.0							1.2																1.2		38.0
40.0																									40.0
44.0																									44.0
48.0																									48.0
52.0																									52.0
56.0																									56.0
60.0																									60.0
64.0																									64.0
68.0																									68.0
72.0																									72.0
1	0	0	0	46	46	46	0	0	0	92	92	92	46	46	46	92	92	92	46	46	46	0	0	0	1
2	0	0	0	46	46	46	0	0	0	46	46	46	46	46	46	46	46	46	46	46	46	0	0	0	2
3	0	0	0	46	46	46	0	0	0	46	46	46	46	46	46	46	46	46	46	46	46	46	46	46	3
4	0	0	0	0	0	0	46	46	46	0	0	0	46	46	46	46	46	46	46	46	46	92	92	92	4
5	0	0	0	0	0	0	92	92	92	0	0	0	0	0	0	0	0	0	46	46	46	92	92	92	5
ID	1	1	1	66	66	66	17	17	17	67	67	67	54	54	54	55	55	55	49	49	49	19	19	19	ID
[DEG]	0~81	41~85	56~85	45~81	46~85	59~85	25~81	36~85	60~85	56~81	58~85	56~85	50~81	52~85	56~85	60~81	62~85	60~85	55~81	56~85	57~85	46~81	47~85	58~85	[DEG]
	1	1	1	1	1	1	1	1	1	1	1	1	1	1	1	1	1	1	1	1	1	1	1	1	
	8.7t	8.7t	8.7t	8.7t	8.7t	8.7t	8.7t	8.7t	8.7t	8.7t	8.7t	8.7t	8.7t	8.7t	8.7t	8.7t	8.7t	8.7t	8.7t	8.7t	8.7t	8.7t	8.7t	8.7t	

m	43.0	43.0	43.0	43.0	43.0	43.0	47.4	47.4	47.4	47.4	47.4	47.4	51.7	51.7	51.7	51.7	51.7	51.7	56.0	56.0	56.0	60.0	60.0	60.0	m
°	5	20	40	5	20	40	5	20	40	5	20	40	5	20	40	5	20	40	5	20	40	5	20	40	°
3.0																									3.0
3.5																									3.5
4.0																									4.0
4.5																									4.5
5.0																									5.0
6.0																									6.0
7.0																									7.0
8.0																									8.0
9.0																									9.0
10.0																									10.0
11.0																									11.0
12.0	5.5			4.1																					12.0
14.0	5.4	4.3		4.1	4.1		4.7	4.2		4.3	4.2		4.1			3.9									14.0
16.0	5.1	4.1		4.1	3.9		4.7	4.1		4.3	4.0		4.1	4.0		3.9	3.9		3.9	3.8		3.6	3.6		16.0
18.0	4.8	3.9	3.2	4.1	3.8		4.7	3.9		4.3	3.8		4.1	3.8		3.9	3.7		3.9	3.7		3.6	3.6		18.0
20.0	4.1	3.8	3.1	4.1	3.6	3.1	4.1	3.7	3.1	4.3	3.7	3.1	4.1	3.7	3.1	3.9	3.6	3.0	3.9	3.6		3.6	3.5		20.0
22.0	3.2	3.6	3.0	4.1	3.5	3.0	3.1	3.6	3.0	3.6	3.5	3.0	3.2	3.5	3.0	3.7	3.5	2.9	3.4	3.5	2.9	3.3	3.4	2.9	22.0
24.0	2.4	3.2	3.0	3.5	3.3	2.9	2.4	3.2	2.9	2.8	3.4	2.9	2.5	3.3	2.9	3.0	3.4	2.9	2.6	3.3	2.9	2.5	3.3	2.8	24.0
26.0	1.8	2.5	2.9	2.9	3.2	2.8	1.8	2.5	2.9	2.2	2.9	2.8	1.8	2.6	2.8	2.3	3.0	2.8	2.0	2.7	2.8	1.9	2.6	2.8	26.0
28.0		1.9	2.6	2.4	2.9	2.7		1.9	2.7	1.7	2.3	2.8		2.0	2.7	1.8	2.4	2.7		2.1	2.7		2.0	2.7	28.0
30.0			2.0	1.9	2.4	2.7			2.1		1.8	2.4			2.1		1.9	2.5			2.2			2.2	30.0
32.0			1.5	1.5	1.9	2.4			1.5			1.9			1.6		1.4	2.0			1.7			1.7	32.0
34.0					1.5	1.9						1.4						1.5							34.0
36.0					1.2	1.5																			36.0
38.0						1.2																			38.0
40.0																									40.0
44.0																									44.0
48.0																									48.0
52.0																									52.0
56.0																									56.0
60.0																									60.0
64.0																									64.0
68.0																									68.0
72.0																									72.0
1	92	92	92	0	0	0	92	92	92	46	46	46	92	92	92	46	46	46	92	92	92	100	100	100	1
2	92	92	92	46	46	46	92	92	92	92	92	92	92	92	92	92	92	92	92	92	92	100	100	100	2
3	46	46	46	92	92	92	92	92	92	92	92	92	92	92	92	92	92	92	92	92	92	100	100	100	3
4	46	46	46	92	92	92	46	46	46	92	92	92	92	92	92	92	92	92	92	92	92	100	100	100	4
5	46	46	46	92	92	92	46	46	46	46	46	46	46	46	46	92	92	92	92	92	92	100	100	100	5
ID	42	42	42	21	21	21	38	38	38	31	31	31	32	32	32	23	23	23	24	24	24	16	16	16	ID
[DEG]	65~81	67~85	67~85	59~81	58~85	59~85	68~81	69~85	69~85	66~81	68~85	67~85	70~81	71~85	71~85	68~81	68~85	69~85	71~81	73~85	73~85	73~81	75~85	75~85	[DEG]
	1	1	1	1	1	1	1	1	1	1	1	1	1	1	1	1	1	1	1	1	1	1	1	1	
	8.7t	8.7t	8.7t	8.7t	8.7t	8.7t	8.7t	8.7t	8.7t	8.7t	8.7t	8.7t	8.7t	8.7t	8.7t	8.7t	8.7t	8.7t	8.7t	8.7t	8.7t	8.7t	8.7t	8.7t	

油圧チルトジブ

HLJ	1.0m + 24.0m	15.4 t	8.0m x 4.1m	360 °	JPN

m	12.8	12.8	12.8	25.8	25.8	25.8	25.8	25.8	25.8	30.1	30.1	30.1	30.1	30.1	30.1	34.4	34.4	34.4	34.4	34.4	34.4	34.4	34.4	34.4	m
°	5	20	40	5	20	40	5	20	40	5	20	40	5	20	40	5	20	40	5	20	40	5	20	40	°
3.0																									3.0
3.5																									3.5
4.0																									4.0
4.5																									4.5
5.0																									5.0
6.0																									6.0
7.0																									7.0
8.0	5.1																								8.0
9.0	5.1																								9.0
10.0	5.1			4.9			3.7																		10.0
11.0	5.1			4.9			3.7			4.6			4.3												11.0
12.0	5.1	4.5		4.9			3.7			4.6			4.3			4.2			4.0			3.2			12.0
14.0	4.8	4.0		4.9	4.4		3.7	3.7		4.6	4.4		4.3	4.3		4.2			4.0			3.2			14.0
16.0	4.3	3.6		4.9	4.1		3.7	3.7		4.6	4.1		4.3	4.1		4.2	4.1		4.0	4.0		3.2	3.2		16.0
18.0	3.8	3.3		4.6	3.8		3.7	3.7		4.6	3.8		4.3	3.9		4.2	3.9		4.0	3.8		3.2	3.2		18.0
20.0	3.4	3.0	2.6	4.3	3.5		3.7	3.4		4.4	3.6		4.3	3.6		4.2	3.6		4.0	3.7		3.2	3.2		20.0
22.0	3.1	2.7	2.4	4.1	3.2	2.6	3.7	3.2	2.5	3.6	3.3	2.6	4.1	3.4	2.6	3.6	3.4	2.6	4.0	3.4		3.2	3.2		22.0
24.0	2.8	2.5	2.2	3.3	3.0	2.4	3.7	3.0	2.4	2.8	3.1	2.5	3.3	3.1	2.5	2.8	3.2	2.5	3.4	3.2	2.5	3.2	3.2	2.5	24.0
26.0	2.6	2.3	2.1	2.7	2.8	2.3	3.4	2.8	2.3	2.2	2.9	2.4	2.7	3.0	2.4	2.2	3.0	2.4	2.8	3.1	2.4	3.2	3.0	2.4	26.0
28.0	2.4	2.2	2.0	2.1	2.7	2.2	3.2	2.6	2.2	1.6	2.4	2.3	2.1	2.8	2.3	1.6	2.5	2.3	2.2	2.9	2.3	2.9	2.8	2.3	28.0
30.0	2.2	2.0		1.7	2.3	2.1	2.7	2.5	2.1		1.9	2.2	1.7	2.3	2.2		1.9	2.2	1.7	2.4	2.2	2.5	2.7	2.2	30.0
32.0	2.0	1.9		1.3	1.8	2.0	2.3	2.4	2.0		1.4	2.1	1.2	1.8	2.1		1.5	2.1	1.3	1.9	2.1	2.1	2.6	2.1	32.0
34.0					1.4	2.0	2.0	2.3	2.0			1.7		1.4	2.0			1.8		1.5	2.1	1.7	2.1	2.1	34.0
36.0						1.5	1.6	2.0	1.9			1.2			1.6			1.3			1.7	1.4	1.8	2.0	36.0
38.0							1.4	1.7							1.2						1.3	1.1	1.5	1.9	38.0
40.0							1.1	1.4															1.2	1.5	40.0
44.0																									44.0
48.0																									48.0
52.0																									52.0
56.0																									56.0
60.0																									60.0
64.0																									64.0
68.0																									68.0
72.0																									72.0
1	0	0	0	46	46	46	0	0	0	92	92	92	46	46	46	92	92	92	46	46	46	0	0	0	1
2	0	0	0	46	46	46	0	0	0	46	46	46	46	46	46	46	46	46	46	46	46	0	0	0	2
3	0	0	0	46	46	46	0	0	0	46	46	46	46	46	46	46	46	46	46	46	46	46	46	46	3
4	0	0	0	0	0	0	46	46	46	0	0	0	46	46	46	46	46	46	46	46	46	92	92	92	4
5	0	0	0	0	0	0	92	92	92	0	0	0	0	0	0	0	0	0	46	46	46	92	92	92	5
ID	1	1	1	66	66	66	17	17	17	67	67	67	54	54	54	55	55	55	49	49	49	19	19	19	ID
[DEG]	0~81	37~85	59~85	51~81	54~85	57~85	38~81	44~85	58~85	61~81	61~85	62~85	55~81	59~85	58~85	63~81	64~85	65~85	59~81	62~85	62~85	52~81	55~85	60~85	[DEG]
	1	1	1	1	1	1	1	1	1	1	1	1	1	1	1	1	1	1	1	1	1	1	1	1	
	8.7t	8.7t	8.7t	8.7t	8.7t	8.7t	8.7t	8.7t	8.7t	8.7t	8.7t	8.7t	8.7t	8.7t	8.7t	8.7t	8.7t	8.7t	8.7t	8.7t	8.7t	8.7t	8.7t	8.7t	

m	43.0	43.0	43.0	43.0	43.0	43.0	47.4	47.4	47.4	47.4	47.4	47.4	51.7	51.7	51.7	51.7	51.7	51.7	56.0	56.0	56.0	60.0	60.0	60.0	m
°	5	20	40	5	20	40	5	20	40	5	20	40	5	20	40	5	20	40	5	20	40	5	20	40	°
3.0																									3.0
3.5																									3.5
4.0																									4.0
4.5																									4.5
5.0																									5.0
6.0																									6.0
7.0																									7.0
8.0																									8.0
9.0																									9.0
10.0																									10.0
11.0																									11.0
12.0																									12.0
14.0	3.8			2.9																					14.0
16.0	3.8			2.9			3.3			3.1			3.0			2.9									16.0
18.0	3.8	3.8		2.9	2.9		3.3	3.3		3.1	3.1		3.0	3.0		2.9			2.9						18.0
20.0	3.8	3.6		2.9	2.9		3.3	3.3		3.1	3.1		3.0	3.0		2.9	2.9		2.9	2.9		2.4			20.0
22.0	3.5	3.5		2.9	2.9		3.3	3.3		3.1	3.1		3.0	3.0		2.9	2.9		2.9	2.9		2.4	2.4		22.0
24.0	2.8	3.3	2.5	2.9	2.9		2.7	3.3		3.1	3.1		2.7	3.0		2.9	2.9		2.8	2.9		2.4	2.4		24.0
26.0	2.1	3.1	2.4	2.9	2.9	2.4	2.1	3.0	2.4	2.5	3.1	2.4	2.1	3.0		2.5	2.9		2.2	2.9		2.1	2.4		26.0
28.0		2.4	2.3	2.5	2.9	2.3		2.4	2.3	1.9	2.7	2.3		2.4	2.3	2.0	2.8	2.3		2.5	2.3		2.4		28.0
30.0		1.9	2.3	2.1	2.7	2.2		1.9	2.3		2.2	2.3		1.9	2.3		2.3	2.3		2.0	2.3		1.9		30.0
32.0			2.2	1.6	2.2	2.2			2.2		1.7	2.2			2.2		1.8	2.2			2.2				32.0
34.0			1.8	1.3	1.8	2.1			1.8			2.0			1.8			2.1			1.9				34.0
36.0			1.4		1.5	2.0						1.6						1.7							36.0
38.0						1.7																			38.0
40.0						1.3																			40.0
44.0																									44.0
48.0																									48.0
52.0																									52.0
56.0																									56.0
60.0																									60.0
64.0																									64.0
68.0																									68.0
72.0																									72.0
1	92	92	92	0	0	0	92	92	92	46	46	46	92	92	92	46	46	46	92	92	92	100	100		1
2	92	92	92	46	46	46	92	92	92	92	92	92	92	92	92	92	92	92	92	92	92	100	100		2
3	46	46	46	92	92	92	92	92	92	92	92	92	92	92	92	92	92	92	92	92	92	100	100		3
4	46	46	46	92	92	92	46	46	46	92	92	92	92	92	92	92	92	92	92	92	92	100	100		4
5	46	46	46	92	92	92	46	46	46	46	46	46	46	46	46	92	92	92	92	92	92	100	100		5
ID	42	42	42	21	21	21	38	38	38	31	31	31	32	32	32	23	23	23	24	24	24	16	16		ID
[DEG]	70~81	71~85	70~85	63~81	66~85	66~85	72~81	73~85	75~85	70~81	71~85	73~85	73~81	75~85	76~85	72~81	73~85	75~85	75~81	76~85	78~85	76~81	77~85		[DEG]
	1	1	1	1	1	1	1	1	1	1	1	1	1	1	1	1	1	1	1	1	1	1	1		
	8.7t	8.7t	8.7t	8.7t	8.7t	8.7t	8.7t	8.7t	8.7t	8.7t	8.7t	8.7t	8.7t	8.7t	8.7t	8.7t	8.7t	8.7t	8.7t	8.7t	8.7t	8.7t	8.7t		

HLJ	1.0m + 31.0m	15.4 t	8.0m x 4.1m	360 °	JPN

m	12.8	12.8	12.8	25.8	25.8	25.8	25.8	25.8	25.8	30.1	30.1	30.1	30.1	30.1	30.1	34.4	34.4	34.4	34.4	34.4	34.4	34.4	34.4	34.4	m
°	5	20	40	5	20	40	5	20	40	5	20	40	5	20	40	5	20	40	5	20	40	5	20	40	°
3.0																									3.0
3.5																									3.5
4.0																									4.0
4.5																									4.5
5.0																									5.0
6.0																									6.0
7.0																									7.0
8.0																									8.0
9.0																									9.0
10.0	3.5																								10.0
11.0	3.5																								11.0
12.0	3.5			3.3			2.6																		12.0
14.0	3.5			3.3			2.6			3.1			2.9			2.9			2.8			2.3			14.0
16.0	3.5	3.0		3.3			2.6			3.1			2.9			2.9			2.8			2.3			16.0
18.0	3.2	2.7		3.3	3.0		2.6	2.6		3.1	3.0		2.9	2.9		2.9			2.8			2.3			18.0
20.0	2.9	2.5		3.3	2.7		2.6	2.6		3.1	2.8		2.9	2.8		2.9	2.8		2.8	2.8		2.3	2.3		20.0
22.0	2.6	2.2		3.3	2.5		2.6	2.5		3.1	2.6		2.9	2.6		2.9	2.6		2.8	2.6		2.3	2.3		22.0
24.0	2.3	2.0	1.7	3.0	2.3		2.6	2.3		3.1	2.4		2.9	2.4		2.9	2.4		2.8	2.4		2.3	2.3		24.0
26.0	2.1	1.9	1.6	2.7	2.2	1.7	2.6	2.1		2.5	2.2		2.9	2.2		2.5	2.3		2.8	2.3		2.3	2.2		26.0
28.0	1.9	1.7	1.5	2.4	2.0	1.6	2.5	2.0	1.6	1.9	2.1	1.6	2.4	2.1	1.6	1.9	2.2	1.6	2.4	2.2		2.3	2.1		28.0
30.0	1.7	1.6	1.4	2.0	1.9	1.5	2.3	1.9	1.5	1.5	2.0	1.5	1.9	2.0	1.5		2.0	1.6	2.0	2.0	1.6	2.3	2.0	1.5	30.0
32.0	1.6	1.5	1.3	1.5	1.8	1.4	2.1	1.8	1.4		1.9	1.5	1.5	1.9	1.5		1.9	1.5	1.5	1.9	1.5	2.2	1.9	1.5	32.0
34.0	1.5	1.4	1.2		1.7	1.4	2.0	1.7	1.4		1.5	1.4		1.8	1.4		1.5	1.4		1.8	1.4	1.8	1.8	1.4	34.0
36.0	1.4	1.3	1.2		1.5	1.3	1.8	1.6	1.3			1.3		1.4	1.3			1.4		1.5	1.4	1.5	1.7	1.4	36.0
38.0	1.3	1.2			1.1	1.3	1.5	1.5	1.3			1.3			1.3			1.3			1.3	1.2	1.6	1.3	38.0
40.0	1.2					1.2	1.2	1.4	1.2						1.2						1.3		1.4	1.3	40.0
44.0								1.1																1.2	44.0
48.0																									48.0
52.0																									52.0
56.0																									56.0
60.0																									60.0
64.0																									64.0
68.0																									68.0
72.0																									72.0
1	0	0	0	46	46	46	0	0	0	92	92	92	46	46	46	92	92	92	46	46	46	0	0	0	1
2	0	0	0	46	46	46	0	0	0	46	46	46	46	46	46	46	46	46	46	46	46	0	0	0	2
3	0	0	0	46	46	46	0	0	0	46	46	46	46	46	46	46	46	46	46	46	46	46	46	46	3
4	0	0	0	0	0	0	46	46	46	0	0	0	46	46	46	46	46	46	46	46	46	92	92	92	4
5	0	0	0	0	0	0	92	92	92	0	0	0	0	0	0	0	0	0	46	46	46	92	92	92	5
ID	1	1	1	66	66	66	17	17	17	67	67	67	54	54	54	55	55	55	49	49	49	19	19	19	ID
[DEG]	0~81	40~85	56~85	59~81	58~85	63~85	49~81	50~85	64~85	64~81	67~85	69~85	62~81	64~85	67~85	68~81	69~85	72~85	64~81	67~85	69~85	59~81	64~85	65~85	[DEG]
	1	1	1	1	1	1	1	1	1	1	1	1	1	1	1	1	1	1	1	1	1	1	1	1	
	8.7t	8.7t	8.7t	8.7t	8.7t	8.7t	8.7t	8.7t	8.7t	8.7t	8.7t	8.7t	8.7t	8.7t	8.7t	8.7t	8.7t	8.7t	8.7t	8.7t	8.7t	8.7t	8.7t	8.7t	

m	43.0	43.0	43.0	43.0	43.0	43.0	47.4	47.4	47.4	47.4	47.4	47.4	51.7	51.7	51.7	51.7	51.7	51.7	m
°	5	20	40	5	20	40	5	20	40	5	20	40	5	20	40	5	20	40	°
3.0																			3.0
3.5																			3.5
4.0																			4.0
4.5																			4.5
5.0																			5.0
6.0																			6.0
7.0																			7.0
8.0																			8.0
9.0																			9.0
10.0																			10.0
11.0																			11.0
12.0																			12.0
14.0																			14.0
16.0	2.7			2.1															16.0
18.0	2.7			2.1			2.4			2.2			2.2			2.1			18.0
20.0	2.7			2.1			2.4			2.2			2.2			2.1			20.0
22.0	2.7	2.6		2.1	2.1		2.4	2.4		2.2	2.2		2.2			2.1			22.0
24.0	2.7	2.5		2.1	2.1		2.4	2.4		2.2	2.2		2.2	2.2		2.1	2.1		24.0
26.0	2.4	2.3		2.1	2.1		2.3	2.3		2.2	2.2		2.2	2.2		2.1	2.1		26.0
28.0	1.8	2.2		2.1	2.1			2.2		2.1	2.2			2.2		2.1	2.1		28.0
30.0		2.1	1.6	2.1	2.1			2.1			2.1			2.1			2.1		30.0
32.0		1.8	1.5	1.8	2.0	1.5		1.8	1.5		2.0	1.5		1.8			2.0		32.0
34.0			1.4	1.4	1.9	1.4			1.5		1.6	1.4					1.7	1.4	34.0
36.0			1.4		1.7	1.4			1.4			1.4						1.4	36.0
38.0			1.3		1.4	1.3			1.4			1.4						1.4	38.0
40.0						1.3						1.3						1.3	40.0
44.0																			44.0
48.0																			48.0
52.0																			52.0
56.0																			56.0
60.0																			60.0
64.0																			64.0
68.0																			68.0
72.0																			72.0
1	92	92	92	0	0	0	92	92	92	46	46	46	92	92		46	46	46	1
2	92	92	92	46	46	46	92	92	92	92	92	92	92	92		92	92	92	2
3	46	46	46	92	92	92	92	92	92	92	92	92	92	92		92	92	92	3
4	46	46	46	92	92	92	46	46	46	92	92	92	92	92		92	92	92	4
5	46	46	46	92	92	92	46	46	46	46	46	46	46	46		92	92	92	5
ID	42	42	42	21	21	21	38	38	38	31	31	31	32	32		23	23	23	ID
[DEG]	72~81	75~85	76~85	67~81	70~85	74~85	75~81	76~85	77~85	74~81	75~85	76~85	76~81	78~85		75~81	76~85	77~85	[DEG]
	1	1	1	1	1	1	1	1	1	1	1	1	1	1		1	1	1	
	8.7t	8.7t	8.7t	8.7t	8.7t	8.7t	8.7t	8.7t	8.7t	8.7t	8.7t	8.7t	8.7t	8.7t		8.7t	8.7t	8.7t	

油圧チルトジブ

HLJ	1.0m + 2.8m	7.1 t	8.0m x 7.5m	360 °	JPN

m	12.8	12.8	12.8	25.8	25.8	25.8	25.8	25.8	25.8	30.1	30.1	30.1	30.1	30.1	30.1	34.4	34.4	34.4	34.4	34.4	34.4	34.4	34.4	34.4	m
°	5	20	40	5	20	40	5	20	40	5	20	40	5	20	40	5	20	40	5	20	40	5	20	40	°
3.0		31.6	25.3																						3.0
3.5	38.1	30.3	24.6		31.4			25.0																	3.5
4.0	36.1	29.1	23.9		30.6	23.4		24.2						31.2											4.0
4.5	34.3	28.0	23.3		29.8	23.1		23.3	21.5		30.2			30.4											4.5
5.0	32.7	27.0	22.8		29.0	22.7		22.4	20.6		29.5	22.8		29.8	22.9		29.9			24.9			16.9		5.0
6.0	29.9	25.3	21.8		27.7	22.0		20.5	19.0		28.3	22.2		28.5	22.3		28.9	22.5		24.9	23.0		16.9	16.9	6.0
7.0	27.7	23.8	20.9		26.5	21.3		18.9	17.7		27.1	21.6		27.4	21.7		27.9	22.0		24.9	22.4		16.9	16.9	7.0
8.0	25.7	22.6	20.2	32.0	25.4	20.8	18.6	17.5	16.5		26.1	21.1		26.3	21.2		26.9	21.5		24.3	21.9		16.9	16.7	8.0
9.0	24.1	21.5		29.5	24.4	20.2	17.3	16.3	15.5	28.8	25.2	20.6	30.1	25.4	20.7		26.0	21.0		23.1	20.9		16.2	15.9	9.0
10.0	22.7	20.6		24.4	23.5	19.7	16.1	15.3	14.6	23.7	24.3	20.2	24.9	24.5	20.2		24.8	20.6	24.4	22.1	20.1		15.3	14.9	10.0
11.0	21.2	19.9		20.3	20.8	19.3	15.1	14.4	13.7	19.7	20.2	19.8	20.9	21.3	19.8	20.3	20.7	20.2	21.8	21.1	19.3	14.8	14.4	14.0	11.0
12.0	17.9	18.1		17.1	17.5	17.9	14.2	13.6	13.0	16.5	16.9	17.3	17.6	18.0	18.4	17.0	17.4	17.9	18.4	18.8	18.6	13.9	13.5	13.2	12.0
14.0				12.5	12.8	13.1	12.6	12.2	11.8	11.9	12.3	12.6	13.0	13.3	13.6	12.4	12.8	13.1	13.8	14.0	14.3	12.3	12.1	11.8	14.0
16.0				9.4	9.6	9.8	11.4	11.1	10.8	8.8	9.1	9.4	9.9	10.1	10.3	9.4	9.6	9.9	10.6	10.8	11.0	11.1	10.9	10.6	16.0
18.0				6.1	6.4		9.5	9.7		5.3	5.6	5.9	6.9	7.2	7.4	6.0	6.4	6.7	8.0	8.3	8.6	9.8	9.8	9.7	18.0
20.0				3.8	4.0		7.3	7.4		3.0	3.3		4.5	4.7		3.7	4.0	4.2	5.5	5.7	5.9	7.7	7.9	8.0	20.0
22.0				2.2	2.4		5.4	5.5		1.5	1.7		2.9	3.0		2.1	2.3		3.7	3.9		5.8	5.9		22.0
24.0				1.1			4.1						1.7	1.8		1.0	1.1		2.5	2.6		4.4	4.5		24.0
26.0													0.8	0.8					1.5	1.6		3.3	3.4		26.0
28.0																			0.8	0.9		2.5	2.6		28.0
30.0																						1.8			30.0
32.0																						1.3			32.0
34.0																									34.0
36.0																									36.0
38.0																									38.0
40.0																									40.0
44.0																									44.0
48.0																									48.0
52.0																									52.0
56.0																									56.0
60.0																									60.0
64.0																									64.0
68.0																									68.0
72.0																									72.0
% 1	0	0	0	46	46	46	0	0	0	92	92	92	46	46	46	92	92	92	46	46	46	0	0	0	1
% 2	0	0	0	46	46	46	0	0	0	46	46	46	46	46	46	46	46	46	46	46	46	0	0	0	2
% 3	0	0	0	46	46	46	0	0	0	46	46	46	46	46	46	46	46	46	46	46	46	46	46	46	3
% 4	0	0	0	0	0	0	46	46	46	0	0	0	46	46	46	46	46	46	46	46	46	92	92	92	4
% 5	0	0	0	0	0	0	92	92	92	0	0	0	0	0	0	0	0	0	46	46	46	92	92	92	5
ID	1	1	1	66	66	66	17	17	17	67	67	67	54	54	54	55	55	55	49	49	49	19	19	19	ID
[DEG]	0~76	34~85	58~85	28~76	37~85	56~85	28~76	38~85	57~85	46~76	47~85	57~85	35~76	36~85	57~85	48~76	49~85	58~85	39~76	40~85	58~85	28~76	41~85	59~85	[DEG]
	5	5	5	4	4	4	3	3	3	4	4	4	4	4	4	4	4	4	3	3	3	2	2	2	
	60t	60t	60t	60t	60t	60t	26t	26t	26t	60t	60t	60t	60t	60t	60t	60t	60t	60t	26t	26t	26t	26t	26t	26t	

m	43.0	43.0	43.0	43.0	43.0	43.0	47.4	47.4	47.4	47.4	47.4	47.4	51.7	51.7	51.7	51.7	51.7	51.7	56.0	56.0	56.0	60.0	60.0	60.0	m
°	5	20	40	5	20	40	5	20	40	5	20	40	5	20	40	5	20	40	5	20	40	5	20	40	°
3.0																									3.0
3.5																									3.5
4.0																									4.0
4.5																									4.5
5.0																									5.0
6.0																									6.0
7.0		17.1	17.1		12.1	12.1		13.9			12.4														7.0
8.0		17.1	17.1		12.1	12.1		13.9	13.9		12.4	12.4		11.1			9.8								8.0
9.0		17.1	17.1		12.1	12.1		13.9	13.9		12.4	12.4		11.1	11.1		9.8	9.8		9.0	9.0		7.8		9.0
10.0		17.1	17.1		12.1	12.1		13.9	13.9		12.4	12.4		11.1	11.1		9.8	9.8		9.0	9.0		7.8	7.8	10.0
11.0		17.1	17.1		12.1	12.1		13.9	13.9		12.4	12.4		11.1	11.1		9.8	9.8		9.0	9.0		7.8	7.8	11.0
12.0		17.1	17.1		12.1	12.1		13.9	13.9		12.4	12.4		11.1	11.1		9.8	9.8		9.0	9.0		7.8	7.8	12.0
14.0	13.1	13.5	13.8	12.1	12.1	12.1		13.6	13.9		12.4	12.4		11.1	11.1		9.8	9.8		9.0	9.0		7.8	7.8	14.0
16.0	10.0	10.3	10.5	11.5	11.4	11.2	10.1	10.4	10.7	10.9	11.1	11.4	10.4	10.7	10.9	9.8	9.8	9.8		9.0	9.0		7.8	7.8	16.0
18.0	7.1	7.4	7.8	9.5	9.7	9.9	7.3	7.6	8.0	8.4	8.7	9.0	7.7	8.0	8.3	8.9	9.1	9.3	8.2	8.5	8.8		7.8	7.8	18.0
20.0	4.6	4.9	5.2	7.2	7.4	7.6	4.8	5.1	5.4	5.8	6.1	6.3	5.2	5.4	5.7	6.3	6.5	6.8	5.6	5.9	6.2	5.6	5.9	6.2	20.0
22.0	3.0	3.2	3.4	5.4	5.5	5.7	3.1	3.4	3.6	4.1	4.3	4.5	3.5	3.7	3.9	4.5	4.7	4.9	3.9	4.1	4.3	3.9	4.1	4.3	22.0
24.0	1.7	1.9	2.1	4.0	4.1	4.3	1.9	2.1	2.3	2.8	3.0	3.1	2.2	2.4	2.6	3.2	3.4	3.5	2.6	2.8	3.0	2.6	2.8	3.0	24.0
26.0	0.8	1.0	1.1	3.0	3.1	3.2	1.0	1.1	1.3	1.8	2.0	2.1	1.3	1.4	1.6	2.2	2.3	2.5	1.6	1.8	2.0	1.6	1.8	1.9	26.0
28.0				2.1	2.2					1.0	1.2	1.3			0.8	1.4	1.5	1.6	0.9	1.0	1.1	0.9	1.0	1.1	28.0
30.0				1.5	1.6											0.8	0.9	1.0							30.0
32.0				0.9	1.0																				32.0
34.0																									34.0
36.0																									36.0
38.0																									38.0
40.0																									40.0
44.0																									44.0
48.0																									48.0
52.0																									52.0
56.0																									56.0
60.0																									60.0
64.0																									64.0
68.0																									68.0
72.0																									72.0
% 1	92	92	92	0	0	0	92	92	92	46	46	46	92	92	92	46	46	46	92	92	92	100	100	100	1
% 2	92	92	92	46	46	46	92	92	92	92	92	92	92	92	92	92	92	92	92	92	92	100	100	100	2
% 3	46	46	46	92	92	92	92	92	92	92	92	92	92	92	92	92	92	92	92	92	92	100	100	100	3
% 4	46	46	46	92	92	92	46	46	46	92	92	92	92	92	92	92	92	92	92	92	92	100	100	100	4
% 5	46	46	46	92	92	92	46	46	46	46	46	46	46	46	46	92	92	92	92	92	92	100	100	100	5
ID	42	42	42	21	21	21	38	38	38	31	31	31	32	32	32	23	23	23	24	24	24	16	16	16	ID
[DEG]	55~76	56~85	56~85	45~76	46~85	57~85	59~76	60~85	60~85	56~76	57~85	57~85	62~76	63~85	61~85	57~76	58~85	58~85	62~76	63~85	64~85	65~76	65~85	66~85	[DEG]
	2	2	2	2	2	2	2	2	2	2	2	2	2	2	2	2	2	2	2	2	2	2	2	2	
	26t	26t	26t	26t	26t	26t	26t	26t	26t	26t	26t	26t	26t	26t	26t	26t	26t	26t	26t	26t	26t	26t	26t	26t	

HLJ	1.0m + 9.2m	7.1 t	8.0m x 7.5m	360 °	JPN

m	12.8	12.8	12.8	25.8	25.8	25.8	25.8	25.8	25.8	30.1	30.1	30.1	30.1	30.1	30.1	34.4	34.4	34.4	34.4	34.4	34.4	34.4	34.4	34.4	m
°	5	20	40	5	20	40	5	20	40	5	20	40	5	20	40	5	20	40	5	20	40	5	20	40	°
3.0																									3.0
3.5																									3.5
4.0	15.0																								4.0
4.5	15.0																								4.5
5.0	15.0	13.5																							5.0
6.0	15.0	12.4			14.4			14.1																	6.0
7.0	14.8	11.4	8.9	15.0	13.5		14.3	13.3			13.6			13.8			13.8			13.4					7.0
8.0	13.4	10.6	8.4	15.0	12.8		14.3	12.5		15.0	12.9		15.0	13.1			13.2			13.3			10.1		8.0
9.0	12.2	9.9	8.0	15.0	12.1	8.7	14.0	11.9	8.6	15.0	12.3	8.8	15.0	12.5	8.8	15.0	12.6		13.4	12.7			10.1		9.0
10.0	11.2	9.2	7.6	15.0	11.5	8.4	13.2	11.3	8.4	15.0	11.8	8.5	15.0	11.9	8.6	15.0	12.1	8.6	13.4	12.2	8.6	10.1	10.1		10.0
11.0	10.4	8.7	7.3	15.0	10.9	8.2	12.5	10.8	8.1	15.0	11.3	8.3	15.0	11.4	8.3	15.0	11.6	8.4	13.4	11.7	8.4	10.1	10.1	8.3	11.0
12.0	9.6	8.2	7.0	14.2	10.4	7.9	11.7	10.3	7.9	15.0	10.8	8.1	15.0	10.9	8.1	15.0	11.1	8.2	13.4	11.2	8.2	10.1	10.1	8.1	12.0
14.0	8.4	7.4	6.5	12.6	9.6	7.5	10.3	9.4	7.4	13.0	10.0	7.7	13.7	10.1	7.7	13.3	10.3	7.8	13.4	10.4	7.8	10.1	9.9	7.8	14.0
16.0	7.5	6.8		10.6	8.9	7.1	9.1	8.4	7.1	9.9	9.3	7.3	10.8	9.3	7.3	10.2	9.7	7.5	11.2	9.7	7.5	9.7	9.2	7.4	16.0
18.0	6.8			8.4	8.3	6.8	8.1	7.6	6.8	7.7	8.4	7.0	8.6	8.7	7.0	7.9	8.7	7.2	8.9	9.1	7.2	8.7	8.4	7.1	18.0
20.0				6.7	7.2	6.5	7.3	6.9	6.5	6.0	6.6	6.7	6.9	7.4	6.8	6.3	6.9	6.9	7.2	7.7	6.9	7.8	7.6	6.9	20.0
22.0				5.3	5.8	6.3	6.7	6.3	6.1	4.7	5.2	5.8	5.5	6.0	6.5	4.9	5.5	6.1	5.9	6.3	6.7	7.0	6.9	6.7	22.0
24.0				4.3	4.7		6.0	5.8		3.6	4.1	4.6	4.5	4.9	5.3	3.9	4.4	4.9	4.8	5.2	5.6	5.9	6.2	6.2	24.0
26.0				3.4	3.7		5.1	5.4		2.8	3.2		3.6	3.9		3.0	3.4	3.9	3.9	4.3	4.6	5.0	5.3	5.6	26.0
28.0				2.7	2.9		4.4	4.6		2.1	2.4		2.9	3.2		2.3	2.7		3.2	3.5		4.3	4.5		28.0
30.0				2.1			3.8			1.5	1.8		2.3	2.5		1.7	2.0		2.6	2.8		3.6	3.8		30.0
32.0													1.7	1.9			1.5		2.0	2.3		3.1	3.3		32.0
34.0													1.3						1.6	1.8		2.6	2.8		34.0
36.0																						2.2			36.0
38.0																						1.9			38.0
40.0																									40.0
44.0																									44.0
48.0																									48.0
52.0																									52.0
56.0																									56.0
60.0																									60.0
64.0																									64.0
68.0																									68.0
72.0																									72.0
% 1	0	0	0	46	46	46	0	0	0	92	92	92	46	46	46	92	92	92	46	46	46	0	0	0	1
% 2	0	0	0	46	46	46	0	0	0	46	46	46	46	46	46	46	46	46	46	46	46	0	0	0	2
% 3	0	0	0	46	46	46	0	0	0	46	46	46	46	46	46	46	46	46	46	46	46	46	46	46	3
% 4	0	0	0	0	0	0	46	46	46	0	0	0	46	46	46	46	46	46	46	46	46	92	92	92	4
% 5	0	0	0	0	0	0	92	92	92	0	0	0	0	0	0	0	0	0	46	46	46	92	92	92	5
ID	1	1	1	66	66	66	17	17	17	67	67	67	54	54	54	55	55	55	49	49	49	19	19	19	ID
[DEG]	0~79	44~85	57~85	27~79	37~85	56~85	27~79	38~85	57~85	38~79	41~85	57~85	26~79	36~85	57~85	45~79	44~85	58~85	37~79	40~85	58~85	27~79	40~85	59~85	[DEG]
	2	2	2	2	2	2	2	2	2	2	2	2	2	2	2	2	2	2	2	2	2	2	2	2	
	26t	26t	26t	26t	26t	26t	26t	26t	26t	26t	26t	26t	26t	26t	26t	26t	26t	26t	26t	26t	26t	26t	26t	26t	

m	43.0	43.0	43.0	43.0	43.0	43.0	47.4	47.4	47.4	47.4	47.4	47.4	51.7	51.7	51.7	51.7	51.7	51.7	56.0	56.0	56.0	60.0	60.0	60.0	m
°	5	20	40	5	20	40	5	20	40	5	20	40	5	20	40	5	20	40	5	20	40	5	20	40	°
3.0																									3.0
3.5																									3.5
4.0																									4.0
4.5																									4.5
5.0																									5.0
6.0																									6.0
7.0																									7.0
8.0																									8.0
9.0		10.6			7.2																				9.0
10.0		10.6			7.2			8.4			7.5														10.0
11.0		10.6			7.2			8.4			7.5			7.0			6.4			6.4					11.0
12.0	10.6	10.6	8.3	7.2	7.2	7.2		8.4			7.5			7.0			6.4			6.4			5.7		12.0
14.0	10.6	10.6	7.9	7.2	7.2	7.2	8.4	8.4	8.0	7.5	7.5	7.5		7.0	7.0	6.4	6.4	6.4		6.4			5.7		14.0
16.0	10.4	10.2	7.6	7.2	7.2	7.2	8.4	8.4	7.7	7.5	7.5	7.5	7.0	7.0	7.0	6.4	6.4	6.4	6.4	6.4	6.4		5.7	5.7	16.0
18.0	8.1	8.9	7.4	7.2	7.2	7.2	8.4	8.4	7.4	7.5	7.5	7.5	7.0	7.0	7.0	6.4	6.4	6.4	6.4	6.4	6.4	5.7	5.7	5.7	18.0
20.0	6.4	7.1	7.1	7.2	7.2	7.1	6.7	7.3	7.2	7.3	7.5	7.2	6.8	7.0	7.0	6.4	6.4	6.4	6.4	6.4	6.4	5.7	5.7	5.7	20.0
22.0	5.1	5.7	6.3	6.8	7.2	6.9	5.3	5.9	6.6	5.9	6.4	7.0	5.5	6.1	6.7	6.1	6.4	6.4	5.7	6.3	6.4	5.7	5.7	5.7	22.0
24.0	4.1	4.6	5.1	5.7	6.0	6.5	4.3	4.8	5.3	4.8	5.3	5.8	4.4	4.9	5.5	5.0	5.5	6.0	4.6	5.1	5.7	4.6	5.1	5.5	24.0
26.0	3.2	3.6	4.1	4.8	5.1	5.5	3.4	3.8	4.3	4.0	4.4	4.8	3.5	4.0	4.5	4.2	4.6	5.0	3.8	4.2	4.7	3.7	4.2	4.7	26.0
28.0	2.5	2.9	3.3	4.0	4.3	4.6	2.7	3.1	3.5	3.2	3.6	4.0	2.8	3.2	3.6	3.4	3.8	4.2	3.0	3.4	3.8	3.0	3.4	3.8	28.0
30.0	1.9	2.2	2.6	3.4	3.6	3.9	2.0	2.4	2.8	2.6	2.9	3.3	2.2	2.5	2.9	2.8	3.1	3.5	2.4	2.7	3.1	2.3	2.7	3.1	30.0
32.0	1.3	1.7	2.0	2.8	3.1	3.3	1.5	1.8	2.2	2.0	2.3	2.6	1.6	2.0	2.3	2.2	2.5	2.8	1.9	2.2	2.5	1.8	2.1	2.5	32.0
34.0				2.3	2.6				1.6	1.6	1.8	2.1		1.5	1.8	1.8	2.0	2.3		1.7	2.0		1.7	2.0	34.0
36.0				1.9	2.1						1.4					1.4	1.6	1.8			1.5			1.5	36.0
38.0				1.6	1.7																				38.0
40.0				1.2	1.4																				40.0
44.0																									44.0
48.0																									48.0
52.0																									52.0
56.0																									56.0
60.0																									60.0
64.0																									64.0
68.0																									68.0
72.0																									72.0
% 1	92	92	92	0	0	0	92	92	92	46	46	46	92	92	92	46	46	46	92	92	92	100	100	100	1
% 2	92	92	92	46	46	46	92	92	92	92	92	92	92	92	92	92	92	92	92	92	92	100	100	100	2
% 3	46	46	46	92	92	92	92	92	92	92	92	92	92	92	92	92	92	92	92	92	92	100	100	100	3
% 4	46	46	46	92	92	92	46	46	46	92	92	92	92	92	92	92	92	92	92	92	92	100	100	100	4
% 5	46	46	46	92	92	92	46	46	46	46	46	46	46	46	46	92	92	92	92	92	92	100	100	100	5
ID	42	42	42	21	21	21	38	38	38	31	31	31	32	32	32	23	23	23	24	24	24	16	16	16	ID
[DEG]	52~79	55~85	57~85	40~79	42~85	58~85	56~79	58~85	58~85	54~79	53~85	58~85	59~79	59~85	61~85	55~79	57~85	59~85	62~79	62~85	62~85	64~79	65~85	64~85	[DEG]
	2	2	2	1	1	1	1	1	1	1	1	1	1	1	1	1	1	1	1	1	1	1	1	1	
	26t	26t	26t	8.7t	8.7t	8.7t	8.7t	8.7t	8.7t	8.7t	8.7t	8.7t	8.7t	8.7t	8.7t	8.7t	8.7t	8.7t	8.7t	8.7t	8.7t	8.7t	8.7t	8.7t	

油圧チルトジブ

HLJ	1.0m + 17.0m	7.1 t	8.0m x 7.5m	360 °	JPN

m	12.8	12.8	12.8	25.8	25.8	25.8	25.8	25.8	25.8	30.1	30.1	30.1	30.1	30.1	30.1	34.4	34.4	34.4	34.4	34.4	34.4	34.4	34.4	34.4	m
°	5	20	40	5	20	40	5	20	40	5	20	40	5	20	40	5	20	40	5	20	40	5	20	40	°
3.0																									3.0
3.5																									3.5
4.0																									4.0
4.5																									4.5
5.0																									5.0
6.0	7.3																								6.0
7.0	6.8																								7.0
8.0	6.4	5.4		7.0			5.6																		8.0
9.0	6.0	5.1		6.7			5.6			6.7			6.5												9.0
10.0	5.7	4.8		6.4	5.0		5.6	4.8		6.5			6.3			6.3			5.9			4.6			10.0
11.0	5.3	4.6		6.1	4.8		5.6	4.6		6.2	4.9		6.1	4.8		6.1	4.8		5.9	4.7		4.6			11.0
12.0	5.1	4.4		5.8	4.7		5.5	4.5		6.0	4.7		5.9	4.6		5.9	4.7		5.7	4.6		4.6	4.4		12.0
14.0	4.6	4.0	3.5	5.4	4.4		5.1	4.2		5.5	4.4		5.4	4.4		5.5	4.4		5.4	4.3		4.6	4.2		14.0
16.0	4.2	3.7	3.3	5.0	4.1	3.4	4.8	3.9	3.3	5.1	4.2	3.4	5.1	4.1	3.4	5.2	4.2	3.4	5.1	4.1		4.6	4.0		16.0
18.0	3.8	3.4	3.1	4.6	3.9	3.3	4.4	3.7	3.2	4.8	3.9	3.3	4.8	3.9	3.3	4.9	3.9	3.3	4.8	3.9	3.2	4.6	3.8	3.2	18.0
20.0	3.5	3.2	3.0	4.3	3.7	3.1	4.2	3.5	3.1	4.5	3.7	3.2	4.5	3.7	3.2	4.6	3.8	3.2	4.5	3.7	3.1	4.3	3.6	3.1	20.0
22.0	3.3	3.1	2.9	4.1	3.5	3.0	3.9	3.4	3.0	4.3	3.6	3.1	4.2	3.5	3.0	4.3	3.6	3.1	4.3	3.5	3.0	4.1	3.5	3.0	22.0
24.0	3.1	2.9		3.8	3.3	2.9	3.7	3.2	2.9	3.2	3.4	3.0	4.0	3.4	2.9	3.4	3.5	3.0	4.0	3.4	2.9	3.9	3.3	2.9	24.0
26.0	3.0			3.0	3.2	2.9	3.5	3.1	2.8	2.2	3.2	2.9	3.1	3.2	2.9	2.3	3.3	2.9	3.3	3.3	2.9	3.7	3.2	2.8	26.0
28.0				2.2	2.9	2.8	3.4	3.0	2.7	1.4	2.2	2.8	2.3	3.0	2.8	1.5	2.4	2.8	2.5	3.2	2.8	3.6	3.1	2.7	28.0
30.0				1.5	2.1		3.2	2.9		0.8	1.5	2.3	1.6	2.2	2.7	0.9	1.6	2.5	1.8	2.4	2.7	2.9	3.0	2.7	30.0
32.0				0.9	1.4		2.6	2.8			0.8	1.5	1.0	1.6	2.1		1.0	1.7	1.2	1.8	2.4	2.4	2.8	2.6	32.0
34.0					0.9		2.1	2.4						1.0				1.1	0.8	1.3	1.8	1.9	2.2	2.6	34.0
36.0							1.7	1.9												0.8		1.4	1.8		36.0
38.0							1.3															1.1	1.4		38.0
40.0																							1.0		40.0
44.0																									44.0
48.0																									48.0
52.0																									52.0
56.0																									56.0
60.0																									60.0
64.0																									64.0
68.0																									68.0
72.0																									72.0
1	0	0	0	46	46	46	0	0	0	92	92	92	46	46	46	92	92	92	46	46	46	0	0	0	1
2	0	0	0	46	46	46	0	0	0	46	46	46	46	46	46	46	46	46	46	46	46	0	0	0	2
3	0	0	0	46	46	46	0	0	0	46	46	46	46	46	46	46	46	46	46	46	46	46	46	46	3
4	0	0	0	0	0	0	46	46	46	0	0	0	46	46	46	46	46	46	46	46	46	92	92	92	4
5	0	0	0	0	0	0	92	92	92	0	0	0	0	0	0	0	0	0	46	46	46	92	92	92	5
ID	1	1	1	66	66	66	17	17	17	67	67	67	54	54	54	55	55	55	49	49	49	19	19	19	ID
[DEG]	0~81	41~85	56~85	40~81	41~85	59~85	25~81	36~85	60~85	50~81	52~85	56~85	47~81	48~85	56~85	54~81	56~85	57~85	49~81	50~85	57~85	43~81	43~85	58~85	[DEG]
	1	1	1	1	1	1	1	1	1	1	1	1	1	1	1	1	1	1	1	1	1	1	1	1	
	8.7t	8.7t	8.7t	8.7t	8.7t	8.7t	8.7t	8.7t	8.7t	8.7t	8.7t	8.7t	8.7t	8.7t	8.7t	8.7t	8.7t	8.7t	8.7t	8.7t	8.7t	8.7t	8.7t	8.7t	

m	43.0	43.0	43.0	43.0	43.0	43.0	47.4	47.4	47.4	47.4	47.4	47.4	51.7	51.7	51.7	51.7	51.7	51.7	56.0	56.0	56.0	60.0	60.0	60.0	m
°	5	20	40	5	20	40	5	20	40	5	20	40	5	20	40	5	20	40	5	20	40	5	20	40	°
3.0																									3.0
3.5																									3.5
4.0																									4.0
4.5																									4.5
5.0																									5.0
6.0																									6.0
7.0																									7.0
8.0																									8.0
9.0																									9.0
10.0																									10.0
11.0																									11.0
12.0	5.5			4.1																					12.0
14.0	5.4	4.3		4.1	4.1		4.7	4.2		4.3	4.2		4.1			3.9									14.0
16.0	5.1	4.1		4.1	3.9		4.7	4.1		4.3	4.0		4.1	4.0		3.9	3.9		3.9	3.8		3.6	3.6		16.0
18.0	4.8	3.9	3.2	4.1	3.8		4.7	3.9		4.3	3.8		4.1	3.8		3.9	3.7		3.9	3.7		3.6	3.6		18.0
20.0	4.6	3.8	3.1	4.1	3.6	3.1	4.6	3.7	3.1	4.3	3.7	3.1	4.1	3.7	3.1	3.9	3.6	3.0	3.9	3.6		3.6	3.5		20.0
22.0	4.4	3.6	3.0	4.1	3.5	3.0	4.4	3.6	3.0	4.3	3.5	3.0	4.1	3.5	3.0	3.9	3.5	2.9	3.9	3.5	2.9	3.6	3.4	2.9	22.0
24.0	3.4	3.5	3.0	4.0	3.3	2.9	3.3	3.5	2.9	4.0	3.4	2.9	3.4	3.4	2.9	3.9	3.4	2.9	3.6	3.3	2.9	3.5	3.3	2.8	24.0
26.0	2.4	3.3	2.9	3.8	3.2	2.8	2.3	3.3	2.9	3.0	3.3	2.8	2.4	3.3	2.8	3.1	3.2	2.8	2.6	3.2	2.8	2.5	3.2	2.8	26.0
28.0	1.6	2.4	2.8	3.1	3.1	2.7	1.5	2.4	2.8	2.1	3.0	2.8	1.6	2.5	2.8	2.3	3.1	2.7	1.8	2.7	2.7	1.7	2.6	2.7	28.0
30.0	0.9	1.7	2.6	2.4	3.0	2.7	0.9	1.7	2.6	1.5	2.2	2.7	1.0	1.7	2.6	1.6	2.3	2.7	1.1	1.9	2.7	1.0	1.8	2.6	30.0
32.0		1.1	1.8	1.8	2.4	2.6		1.0	1.8	0.9	1.6	2.3		1.1	1.9	1.1	1.7	2.4		1.3	2.1		1.2	2.0	32.0
34.0			1.2	1.3	1.8	2.3			1.2		1.0	1.7			1.3		1.2	1.8		0.8	1.5			1.4	34.0
36.0				0.9	1.4	1.8						1.1			0.8			1.3			0.9			0.9	36.0
38.0					1.0	1.3												0.8							38.0
40.0																									40.0
44.0																									44.0
48.0																									48.0
52.0																									52.0
56.0																									56.0
60.0																									60.0
64.0																									64.0
68.0																									68.0
72.0																									72.0
1	92	92	92	0	0	0	92	92	92	46	46	46	92	92	92	46	46	46	92	92	92	100	100	100	1
2	92	92	92	46	46	46	92	92	92	92	92	92	92	92	92	92	92	92	92	92	92	100	100	100	2
3	46	46	46	92	92	92	92	92	92	92	92	92	92	92	92	92	92	92	92	92	92	100	100	100	3
4	46	46	46	92	92	92	46	46	46	92	92	92	92	92	92	92	92	92	92	92	92	100	100	100	4
5	46	46	46	92	92	92	46	46	46	46	46	46	46	46	46	92	92	92	92	92	92	100	100	100	5
ID	42	42	42	21	21	21	38	38	38	31	31	31	32	32	32	23	23	23	24	24	24	16	16	16	ID
[DEG]	61~81	63~85	64~85	54~81	56~85	59~85	63~81	65~85	67~85	61~81	63~85	65~85	66~81	67~85	67~85	64~81	66~85	65~85	68~81	68~85	69~85	69~81	71~85	71~85	[DEG]
	1	1	1	1	1	1	1	1	1	1	1	1	1	1	1	1	1	1	1	1	1	1	1	1	
	8.7t	8.7t	8.7t	8.7t	8.7t	8.7t	8.7t	8.7t	8.7t	8.7t	8.7t	8.7t	8.7t	8.7t	8.7t	8.7t	8.7t	8.7t	8.7t	8.7t	8.7t	8.7t	8.7t	8.7t	

HLJ	1.0m + 24.0m	7.1 t	8.0m x 7.5m	360 °	JPN

m	12.8	12.8	12.8	25.8	25.8	25.8	25.8	25.8	25.8	30.1	30.1	30.1	30.1	30.1	30.1	34.4	34.4	34.4	34.4	34.4	34.4	34.4	34.4	34.4	m
°	5	20	40	5	20	40	5	20	40	5	20	40	5	20	40	5	20	40	5	20	40	5	20	40	°
3.0																									3.0
3.5																									3.5
4.0																									4.0
4.5																									4.5
5.0																									5.0
6.0																									6.0
7.0																									7.0
8.0	5.1																								8.0
9.0	5.1																								9.0
10.0	5.1			4.9			3.7																		10.0
11.0	5.1			4.9			3.7			4.6			4.3												11.0
12.0	5.1	4.5		4.9			3.7			4.6			4.3			4.2			4.0			3.2			12.0
14.0	4.8	4.0		4.9	4.4		3.7	3.7		4.6	4.4		4.3	4.3		4.2			4.0			3.2			14.0
16.0	4.3	3.6		4.9	4.1		3.7	3.7		4.6	4.1		4.3	4.1		4.2	4.1		4.0	4.0		3.2	3.2		16.0
18.0	3.8	3.3		4.6	3.8		3.7	3.7		4.6	3.8		4.3	3.9		4.2	3.9		4.0	3.8		3.2	3.2		18.0
20.0	3.4	3.0	2.6	4.3	3.5		3.7	3.4		4.4	3.6		4.3	3.6		4.2	3.6		4.0	3.7		3.2	3.2		20.0
22.0	3.1	2.7	2.4	4.1	3.2	2.6	3.7	3.2	2.5	4.2	3.3	2.6	4.2	3.4	2.6	4.2	3.4	2.6	4.0	3.4		3.2	3.2		22.0
24.0	2.8	2.5	2.2	3.7	3.0	2.4	3.7	3.0	2.4	4.0	3.1	2.5	4.0	3.1	2.5	4.0	3.2	2.5	3.9	3.2	2.5	3.2	3.2	2.5	24.0
26.0	2.6	2.3	2.1	3.5	2.8	2.3	3.4	2.8	2.3	3.1	2.9	2.4	3.7	3.0	2.4	3.1	3.0	2.4	3.8	3.1	2.4	3.2	3.0	2.4	26.0
28.0	2.4	2.2	2.0	2.9	2.7	2.2	3.2	2.6	2.2	2.2	2.8	2.3	2.9	2.8	2.3	2.2	2.9	2.3	3.0	2.9	2.3	3.2	2.8	2.3	28.0
30.0	2.2	2.0		2.2	2.5	2.1	2.9	2.5	2.1	1.5	2.5	2.2	2.2	2.6	2.2	1.5	2.6	2.2	2.3	2.7	2.2	3.2	2.7	2.2	30.0
32.0	2.0	1.9		1.6	2.4	2.0	2.8	2.4	2.0	0.9	1.8	2.1	1.6	2.4	2.1	1.0	1.9	2.1	1.7	2.5	2.1	2.7	2.6	2.1	32.0
34.0				1.1	1.8	2.0	2.5	2.3	2.0		1.2	2.0	1.1	1.8	2.0		1.3	2.1	1.2	1.9	2.1	2.2	2.5	2.1	34.0
36.0					1.3	1.9	2.1	2.1	1.9			1.5		1.3	2.0		0.8	1.6	0.8	1.4	2.0	1.7	2.2	2.0	36.0
38.0					0.8		1.7	2.0				1.0		0.9	1.5			1.1		1.0	1.6	1.4	1.8	1.9	38.0
40.0							1.4	1.7													1.2	1.0	1.4	1.8	40.0
44.0							0.8																0.8		44.0
48.0																									48.0
52.0																									52.0
56.0																									56.0
60.0																									60.0
64.0																									64.0
68.0																									68.0
72.0																									72.0
1	0	0	0	46	46	46	0	0	0	92	92	92	46	46	46	92	92	92	46	46	46	0	0	0	1
2	0	0	0	46	46	46	0	0	0	46	46	46	46	46	46	46	46	46	46	46	46	0	0	0	2
3	0	0	0	46	46	46	0	0	0	46	46	46	46	46	46	46	46	46	46	46	46	46	46	46	3
4	0	0	0	0	0	0	46	46	46	0	0	0	46	46	46	46	46	46	46	46	46	92	92	92	4
5	0	0	0	0	0	0	92	92	92	0	0	0	0	0	0	0	0	0	46	46	46	92	92	92	5
ID	1	1	1	66	66	66	17	17	17	67	67	67	54	54	54	55	55	55	49	49	49	19	19	19	ID
[DEG]	0~81	37~85	59~85	48~81	47~85	57~85	28~81	44~85	58~85	55~81	59~85	58~85	53~81	53~85	58~85	58~81	59~85	62~85	54~81	57~85	59~85	49~81	49~85	60~85	[DEG]
	1	1	1	1	1	1	1	1	1	1	1	1	1	1	1	1	1	1	1	1	1	1	1	1	
	8.7t	8.7t	8.7t	8.7t	8.7t	8.7t	8.7t	8.7t	8.7t	8.7t	8.7t	8.7t	8.7t	8.7t	8.7t	8.7t	8.7t	8.7t	8.7t	8.7t	8.7t	8.7t	8.7t	8.7t	

m	43.0	43.0	43.0	43.0	43.0	43.0	47.4	47.4	47.4	47.4	47.4	47.4	51.7	51.7	51.7	51.7	51.7	51.7	56.0	56.0	56.0	60.0	60.0	60.0	m
°	5	20	40	5	20	40	5	20	40	5	20	40	5	20	40	5	20	40	5	20	40	5	20	40	°
3.0																									3.0
3.5																									3.5
4.0																									4.0
4.5																									4.5
5.0																									5.0
6.0																									6.0
7.0																									7.0
8.0																									8.0
9.0																									9.0
10.0																									10.0
11.0																									11.0
12.0																									12.0
14.0	3.8			2.9																					14.0
16.0	3.8			2.9			3.3			3.1			3.0			2.9									16.0
18.0	3.8	3.8		2.9	2.9		3.3	3.3		3.1	3.1		3.0	3.0		2.9			2.9						18.0
20.0	3.8	3.6		2.9	2.9		3.3	3.3		3.1	3.1		3.0	3.0		2.9	2.9		2.9	2.9		2.4			20.0
22.0	3.8	3.5		2.9	2.9		3.3	3.3		3.1	3.1		3.0	3.0		2.9	2.9		2.9	2.9		2.4	2.4		22.0
24.0	3.8	3.3	2.5	2.9	2.9		3.3	3.3		3.1	3.1		3.0	3.0		2.9	2.9		2.9	2.9		2.4	2.4		24.0
26.0	3.0	3.2	2.4	2.9	2.9	2.4	2.9	3.2	2.4	3.1	3.1	2.4	2.9	3.0		2.9	2.9		2.9	2.9		2.4	2.4		26.0
28.0	2.1	3.0	2.3	2.9	2.9	2.3	2.0	3.0	2.3	2.6	3.0	2.3	2.1	3.0	2.3	2.7	2.9	2.3	2.2	2.9	2.3	2.1	2.4		28.0
30.0	1.4	2.5	2.3	2.8	2.8	2.2	1.3	2.4	2.3	1.9	2.8	2.3	1.4	2.4	2.3	2.0	2.9	2.3	1.5	2.5	2.3	1.4	2.3	2.0	30.0
32.0	0.9	1.8	2.2	2.1	2.7	2.2	0.8	1.7	2.2	1.3	2.2	2.2	0.8	1.7	2.2	1.4	2.2	2.2	0.9	1.8	2.2	0.8	1.7	2.0	32.0
34.0		1.2	2.1	1.6	2.3	2.1		1.2	2.1	0.8	1.6	2.1		1.2	2.1	0.9	1.7	2.2		1.3	2.2		1.2	1.9	34.0
36.0			1.6	1.2	1.8	2.1			1.6		1.1	1.9			1.6		1.2	2.0		0.8	1.6			1.5	36.0
38.0			1.1	0.8	1.4	2.0			1.1			1.4			1.1		0.8	1.5			1.1			1.0	38.0
40.0					1.0	1.5						1.0						1.1							40.0
44.0						0.8																			44.0
48.0																									48.0
52.0																									52.0
56.0																									56.0
60.0																									60.0
64.0																									64.0
68.0																									68.0
72.0																									72.0
1	92	92	92	0	0	0	92	92	92	46	46	46	92	92	92	46	46	46	92	92	92	100	100	100	1
2	92	92	92	46	46	46	92	92	92	92	92	92	92	92	92	92	92	92	92	92	92	100	100	100	2
3	46	46	46	92	92	92	92	92	92	92	92	92	92	92	92	92	92	92	92	92	92	100	100	100	3
4	46	46	46	92	92	92	46	46	46	92	92	92	92	92	92	92	92	92	92	92	92	100	100	100	4
5	46	46	46	92	92	92	46	46	46	46	46	46	46	46	46	92	92	92	92	92	92	100	100	100	5
ID	42	42	42	21	21	21	38	38	38	31	31	31	32	32	32	23	23	23	24	24	24	16	16	16	ID
[DEG]	64~81	67~85	68~85	58~81	61~85	61~85	66~81	69~85	70~85	64~81	67~85	68~85	68~81	71~85	72~85	66~81	67~85	70~85	70~81	71~85	74~85	71~81	74~85	75~85	[DEG]
	1	1	1	1	1	1	1	1	1	1	1	1	1	1	1	1	1	1	1	1	1	1	1	1	
	8.7t	8.7t	8.7t	8.7t	8.7t	8.7t	8.7t	8.7t	8.7t	8.7t	8.7t	8.7t	8.7t	8.7t	8.7t	8.7t	8.7t	8.7t	8.7t	8.7t	8.7t	8.7t	8.7t	8.7t	

油圧チルトジブ

HLJ	1.0m + 31.0m	7.1 t	8.0m x 7.5m	360 °	JPN

m	12.8	12.8	12.8	25.8	25.8	25.8	25.8	25.8	25.8	30.1	30.1	30.1	30.1	30.1	30.1	34.4	34.4	34.4	34.4	34.4	34.4	34.4	34.4	34.4	m
°	5	20	40	5	20	40	5	20	40	5	20	40	5	20	40	5	20	40	5	20	40	5	20	40	°
3.0																									3.0
3.5																									3.5
4.0																									4.0
4.5																									4.5
5.0																									5.0
6.0																									6.0
7.0																									7.0
8.0																									8.0
9.0																									9.0
10.0	3.5																								10.0
11.0	3.5																								11.0
12.0	3.5			3.3			2.6																		12.0
14.0	3.5			3.3			2.6			3.1			2.9			2.9			2.8			2.3			14.0
16.0	3.5	3.0		3.3			2.6			3.1			2.9			2.9			2.8			2.3			16.0
18.0	3.2	2.7		3.3	3.0		2.6	2.6		3.1	3.0		2.9	2.9		2.9			2.8			2.3			18.0
20.0	2.9	2.5		3.3	2.7		2.6	2.6		3.1	2.8		2.9	2.8		2.9	2.8		2.8	2.8		2.3	2.3		20.0
22.0	2.6	2.2		3.3	2.5		2.6	2.5		3.1	2.6		2.9	2.6		2.9	2.6		2.8	2.6		2.3	2.3		22.0
24.0	2.3	2.0	1.7	3.0	2.3		2.6	2.3		3.1	2.4		2.9	2.4		2.9	2.4		2.8	2.4		2.3	2.3		24.0
26.0	2.1	1.9	1.6	2.7	2.2	1.7	2.6	2.1		2.9	2.2		2.9	2.2		2.9	2.3		2.8	2.3		2.3	2.2		26.0
28.0	1.9	1.7	1.5	2.5	2.0	1.6	2.5	2.0	1.6	2.7	2.1	1.6	2.7	2.1	1.6	2.8	2.2	1.6	2.8	2.2		2.3	2.1		28.0
30.0	1.7	1.6	1.4	2.3	1.9	1.5	2.3	1.9	1.5	2.1	2.0	1.5	2.5	2.0	1.5	2.0	2.0	1.6	2.6	2.0	1.6	2.3	2.0	1.5	30.0
32.0	1.6	1.5	1.3	2.1	1.8	1.4	2.1	1.8	1.4	1.5	1.9	1.5	2.1	1.9	1.5	1.4	1.9	1.5	2.1	1.9	1.5	2.3	1.9	1.5	32.0
34.0	1.5	1.4	1.2	1.6	1.7	1.4	2.0	1.7	1.4	0.9	1.7	1.4	1.5	1.8	1.4	0.9	1.8	1.4	1.6	1.8	1.4	2.2	1.8	1.4	34.0
36.0	1.4	1.3	1.2	1.2	1.6	1.3	1.8	1.6	1.3		1.4	1.3	1.1	1.7	1.3		1.4	1.4	1.1	1.7	1.4	2.0	1.7	1.4	36.0
38.0	1.3	1.2		0.8	1.4	1.3	1.7	1.5	1.3		0.9	1.3		1.4	1.3		0.9	1.3	0.8	1.5	1.3	1.6	1.6	1.3	38.0
40.0	1.2				1.0	1.2	1.6	1.4	1.2			1.2		1.0	1.2			1.3		1.1	1.3	1.2	1.5	1.3	40.0
44.0							1.0	1.3							0.9						1.0		1.1	1.2	44.0
48.0								0.8																0.9	48.0
52.0																									52.0
56.0																									56.0
60.0																									60.0
64.0																									64.0
68.0																									68.0
72.0																									72.0
1	0	0	0	46	46	46	0	0	0	92	92	92	46	46	46	92	92	92	46	46	46	0	0	0	1
2	0	0	0	46	46	46	0	0	0	46	46	46	46	46	46	46	46	46	46	46	46	0	0	0	2
3	0	0	0	46	46	46	0	0	0	46	46	46	46	46	46	46	46	46	46	46	46	46	46	46	3
4	0	0	0	0	0	0	46	46	46	0	0	0	46	46	46	46	46	46	46	46	46	92	92	92	4
5	0	0	0	0	0	0	92	92	92	0	0	0	0	0	0	0	0	0	46	46	46	92	92	92	5
ID	1	1	1	66	66	66	17	17	17	67	67	67	54	54	54	55	55	55	49	49	49	19	19	19	ID
[DEG]	0~81	40~85	56~85	50~81	55~85	63~85	43~81	42~85	64~85	59~81	61~85	66~85	57~81	59~85	60~85	62~81	64~85	69~85	58~81	62~85	64~85	57~81	59~85	59~85	[DEG]
	1	1	1	1	1	1	1	1	1	1	1	1	1	1	1	1	1	1	1	1	1	1	1	1	
	8.7t	8.7t	8.7t	8.7t	8.7t	8.7t	8.7t	8.7t	8.7t	8.7t	8.7t	8.7t	8.7t	8.7t	8.7t	8.7t	8.7t	8.7t	8.7t	8.7t	8.7t	8.7t	8.7t	8.7t	

m	43.0	43.0	43.0	43.0	43.0	43.0	47.4	47.4	47.4	47.4	47.4	47.4	51.7	51.7	51.7	51.7	51.7	51.7	56.0	56.0	56.0	60.0	60.0	60.0	m
°	5	20	40	5	20	40	5	20	40	5	20	40	5	20	40	5	20	40	5	20	40	5	20	40	°
3.0																									3.0
3.5																									3.5
4.0																									4.0
4.5																									4.5
5.0																									5.0
6.0																									6.0
7.0																									7.0
8.0																									8.0
9.0																									9.0
10.0																									10.0
11.0																									11.0
12.0																									12.0
14.0																									14.0
16.0	2.7			2.1																					16.0
18.0	2.7			2.1			2.4			2.2			2.2			2.1									18.0
20.0	2.7			2.1			2.4			2.2			2.2			2.1									20.0
22.0	2.7	2.6		2.1	2.1		2.4	2.4		2.2	2.2		2.2			2.1			2.1			1.6			22.0
24.0	2.7	2.5		2.1	2.1		2.4	2.4		2.2	2.2		2.2	2.2		2.1	2.1		2.1	2.1		1.6			24.0
26.0	2.7	2.3		2.1	2.1		2.4	2.3		2.2	2.2		2.2	2.2		2.1	2.1		2.1	2.1		1.6	1.6		26.0
28.0	2.6	2.2		2.1	2.1		2.4	2.2		2.2	2.2		2.2	2.2		2.1	2.1		2.1	2.1		1.6	1.6		28.0
30.0	1.8	2.1	1.6	2.1	2.1		1.7	2.1		2.2	2.1		1.7	2.1		2.1	2.1		1.8	2.1		1.6	1.6		30.0
32.0	1.2	2.0	1.5	2.1	2.0	1.5	1.1	2.0	1.5	1.6	2.0	1.5	1.1	2.0		1.7	2.0		1.2	2.0		1.1	1.6		32.0
34.0		1.8	1.4	1.9	1.9	1.4		1.6	1.5	1.1	1.9	1.4		1.6	1.4	1.1	1.9	1.4		1.6	1.4		1.4		34.0
36.0		1.3	1.4	1.4	1.8	1.4		1.1	1.4		1.5	1.4		1.1	1.4		1.5	1.4		1.1	1.4		1.0		36.0
38.0		0.8	1.3	1.0	1.7	1.3			1.4		1.1	1.4			1.4		1.1	1.4			1.4				38.0
40.0			1.3		1.3	1.3			1.2			1.3			1.2			1.3			1.1				40.0
44.0						1.2																			44.0
48.0																									48.0
52.0																									52.0
56.0																									56.0
60.0																									60.0
64.0																									64.0
68.0																									68.0
72.0																									72.0
1	92	92	92	0	0	0	92	92	92	46	46	46	92	92	92	46	46	46	92	92	92	100	100		1
2	92	92	92	46	46	46	92	92	92	92	92	92	92	92	92	92	92	92	92	92	92	100	100		2
3	46	46	46	92	92	92	92	92	92	92	92	92	92	92	92	92	92	92	92	92	92	100	100		3
4	46	46	46	92	92	92	46	46	46	92	92	92	92	92	92	92	92	92	92	92	92	100	100		4
5	46	46	46	92	92	92	46	46	46	46	46	46	46	46	46	92	92	92	92	92	92	100	100		5
ID	42	42	42	21	21	21	38	38	38	31	31	31	32	32	32	23	23	23	24	24	24	16	16		ID
[DEG]	68~81	69~85	74~85	64~81	68~85	70~85	70~81	73~85	75~85	68~81	71~85	76~85	72~81	74~85	77~85	70~81	73~85	77~85	73~81	76~85	78~85	74~81	77~85		[DEG]
	1	1	1	1	1	1	1	1	1	1	1	1	1	1	1	1	1	1	1	1	1	1	1		
	8.7t	8.7t	8.7t	8.7t	8.7t	8.7t	8.7t	8.7t	8.7t	8.7t	8.7t	8.7t	8.7t	8.7t	8.7t	8.7t	8.7t	8.7t	8.7t	8.7t	8.7t	8.7t	8.7t		

HLJ	1.0m + 2.8m	7.1 t	8.0m x 6.2m	360 °	JPN

m	12.8	12.8	12.8	25.8	25.8	25.8	25.8	25.8	25.8	30.1	30.1	30.1	30.1	30.1	30.1	34.4	34.4	34.4	34.4	34.4	34.4	34.4	34.4	34.4	m
°	5	20	40	5	20	40	5	20	40	5	20	40	5	20	40	5	20	40	5	20	40	5	20	40	°
3.0		31.6	25.3																						3.0
3.5	38.1	30.3	24.6		31.4			25.0																	3.5
4.0	36.1	29.1	23.9		30.6	23.4		24.2						31.2											4.0
4.5	34.3	28.0	23.3		29.8	23.1		23.3	21.5		30.2			30.4											4.5
5.0	32.7	27.0	22.8		29.0	22.7		22.4	20.6		29.5	22.8		29.8	22.9		29.9			24.9			16.9		5.0
6.0	29.9	25.3	21.8		27.7	22.0		20.5	19.0		28.3	22.2		28.5	22.3		28.9	22.5		24.9	23.0		16.9	16.9	6.0
7.0	27.7	23.8	20.9		26.5	21.3		18.9	17.7		27.1	21.6		27.4	21.7		27.9	22.0		24.9	22.4		16.9	16.9	7.0
8.0	25.7	22.6	20.2	27.8	25.4	20.8	18.6	17.5	16.5		26.1	21.1		26.3	21.2		26.9	21.5		24.3	21.9		16.9	16.7	8.0
9.0	22.9	21.5		22.0	22.6	20.2	17.3	16.3	15.5	21.3	22.0	20.6	22.6	23.2	20.7		22.6	21.0		23.1	20.9		16.2	15.9	9.0
10.0	18.7	19.1		17.9	18.4	18.9	16.1	15.3	14.6	17.3	17.8	18.4	18.4	18.9	19.4		18.3	18.9	19.3	19.7	20.1		15.3	14.9	10.0
11.0	15.6	15.8		14.8	15.2	15.7	15.1	14.4	13.7	14.2	14.7	15.2	15.3	15.7	16.2	14.8	15.2	15.7	16.1	16.5	16.9	14.8	14.4	14.0	11.0
12.0	13.2	13.4		12.4	12.8	13.1	14.2	13.6	13.0	11.9	12.3	12.7	12.9	13.3	13.6	12.4	12.8	13.2	13.7	14.0	14.4	13.9	13.5	13.2	12.0
14.0				9.0	9.2	9.5	11.4	11.6	11.8	8.4	8.7	9.1	9.4	9.7	10.0	8.9	9.2	9.5	10.2	10.4	10.7	11.7	11.9	11.8	14.0
16.0				6.6	6.8	7.0	8.9	9.0	9.2	6.1	6.3	6.6	7.0	7.3	7.5	6.5	6.8	7.0	7.7	7.9	8.1	9.2	9.4	9.5	16.0
18.0				4.9	5.0		7.1	7.2		4.3	4.6	4.7	5.3	5.5	5.6	4.8	5.0	5.2	5.9	6.1	6.3	7.4	7.5	7.6	18.0
20.0				3.5	3.7		5.7	5.8		3.0	3.2		4.0	4.1		3.5	3.6	3.8	4.6	4.7	4.8	6.0	6.1	6.2	20.0
22.0				2.2	2.4		4.6	4.7		1.5	1.7		2.9	3.0		2.1	2.3		3.5	3.6		4.9	5.0		22.0
24.0				1.1			3.8						1.7	1.8		1.0	1.1		2.5	2.6		4.0	4.1		24.0
26.0													0.8	0.8					1.5	1.6		3.2	3.3		26.0
28.0																			0.8	0.9		2.5	2.6		28.0
30.0																						1.8			30.0
32.0																						1.3			32.0
34.0																									34.0
36.0																									36.0
38.0																									38.0
40.0																									40.0
44.0																									44.0
48.0																									48.0
52.0																									52.0
56.0																									56.0
60.0																									60.0
64.0																									64.0
68.0																									68.0
72.0																									72.0
1	0	0	0	46	46	46	0	0	0	92	92	92	46	46	46	92	92	92	46	46	46	0	0	0	1
2	0	0	0	46	46	46	0	0	0	46	46	46	46	46	46	46	46	46	46	46	46	0	0	0	2
3	0	0	0	46	46	46	0	0	0	46	46	46	46	46	46	46	46	46	46	46	46	46	46	46	3
4	0	0	0	0	0	0	46	46	46	0	0	0	46	46	46	46	46	46	46	46	46	92	92	92	4
5	0	0	0	0	0	0	92	92	92	0	0	0	0	0	0	0	0	0	46	46	46	92	92	92	5
ID	1	1	1	66	66	66	17	17	17	67	67	67	54	54	54	55	55	55	49	49	49	19	19	19	ID
[DEG]	0~76	34~85	58~85	28~76	37~85	56~85	28~76	38~85	56~85	46~76	47~85	57~85	35~76	36~85	57~85	48~76	49~85	58~85	39~76	40~85	58~85	28~76	41~85	59~85	[DEG]
	5	5	5	4	4	4	3	3	3	4	4	4	4	4	4	4	4	4	3	3	3	2	2	2	
	60t	60t	60t	60t	60t	60t	26t	26t	26t	60t	60t	60t	60t	60t	60t	60t	60t	60t	26t	26t	26t	26t	26t	26t	

m	43.0	43.0	43.0	43.0	43.0	43.0	47.4	47.4	47.4	47.4	47.4	47.4	51.7	51.7	51.7	51.7	51.7	51.7	56.0	56.0	56.0	60.0	60.0	60.0	m
°	5	20	40	5	20	40	5	20	40	5	20	40	5	20	40	5	20	40	5	20	40	5	20	40	°
3.0																									3.0
3.5																									3.5
4.0																									4.0
4.5																									4.5
5.0																									5.0
6.0																									6.0
7.0		17.1	17.1		12.1	12.1		13.9			12.4														7.0
8.0		17.1	17.1		12.1	12.1		13.9	13.9		12.4	12.4		11.1			9.8								8.0
9.0		17.1	17.1		12.1	12.1		13.9	13.9		12.4	12.4		11.1	11.1		9.8	9.8		9.0	9.0		7.8		9.0
10.0		17.1	17.1		12.1	12.1		13.9	13.9		12.4	12.4		11.1	11.1		9.8	9.8		9.0	9.0		7.8	7.8	10.0
11.0		15.9	16.4		12.1	12.1		13.9	13.9		12.4	12.4		11.1	11.1		9.8	9.8		9.0	9.0		7.8	7.8	11.0
12.0		13.5	13.9		12.1	12.1		13.6	13.9		12.4	12.4		11.1	11.1		9.8	9.8		9.0	9.0		7.8	7.8	12.0
14.0	9.6	9.9	10.2	11.4	11.6	11.9		10.0	10.3		10.7	11.0		10.3	10.6		9.8	9.8		9.0	9.0		7.8	7.8	14.0
16.0	7.2	7.4	7.7	8.9	9.1	9.3	7.3	7.5	7.8	8.0	8.2	8.4	7.5	7.8	8.0	8.3	8.5	8.7		8.1	8.3		7.8	7.8	16.0
18.0	5.4	5.6	5.8	7.1	7.2	7.4	5.5	5.7	5.9	6.2	6.4	6.6	5.7	6.0	6.2	6.5	6.7	6.8	6.0	6.2	6.5		6.2	6.5	18.0
20.0	4.1	4.2	4.4	5.7	5.8	5.9	4.2	4.3	4.5	4.8	5.0	5.1	4.4	4.6	4.7	5.1	5.3	5.4	4.7	4.9	5.0	4.7	4.8	5.0	20.0
22.0	3.0	3.1	3.3	4.6	4.7	4.8	3.1	3.3	3.4	3.7	3.9	4.0	3.3	3.5	3.6	4.0	4.2	4.3	3.6	3.8	3.9	3.6	3.8	3.9	22.0
24.0	1.7	1.9	2.1	3.7	3.8	3.9	1.9	2.1	2.3	2.8	3.0	3.1	2.2	2.4	2.6	3.1	3.3	3.4	2.6	2.8	3.0	2.6	2.8	3.0	24.0
26.0		1.0	1.1	3.0	3.1	3.1	1.0	1.1	1.3	1.8	2.0	2.1	1.3	1.4	1.6	2.2	2.3	2.5	1.6	1.8	2.0	1.6	1.8	1.9	26.0
28.0				2.1	2.2					1.0	1.2	1.3				1.4	1.5	1.6							28.0
30.0				1.5	1.6											0.8	0.9	1.0							30.0
32.0				0.9	1.0																				32.0
34.0																									34.0
36.0																									36.0
38.0																									38.0
40.0																									40.0
44.0																									44.0
48.0																									48.0
52.0																									52.0
56.0																									56.0
60.0																									60.0
64.0																									64.0
68.0																									68.0
72.0																									72.0
1	92	92	92	0	0	0	92	92	92	46	46	46	92	92	92	46	46	46	92	92	92	100	100	100	1
2	92	92	92	46	46	46	92	92	92	92	92	92	92	92	92	92	92	92	92	92	92	100	100	100	2
3	46	46	46	92	92	92	92	92	92	92	92	92	92	92	92	92	92	92	92	92	92	100	100	100	3
4	46	46	46	92	92	92	46	46	46	92	92	92	92	92	92	92	92	92	92	92	92	100	100	100	4
5	46	46	46	92	92	92	46	46	46	46	46	46	46	46	46	92	92	92	92	92	92	100	100	100	5
ID	42	42	42	21	21	21	38	38	38	31	31	31	32	32	32	23	23	23	24	24	24	16	16	16	ID
[DEG]	58~76	56~85	56~85	45~76	46~85	57~85	59~76	60~85	60~85	56~76	57~85	57~85	62~76	63~85	63~85	57~76	58~85	58~85	65~76	66~85	66~85	67~76	68~85	68~85	[DEG]
	2	2	2	2	2	2	2	2	2	2	2	2	2	2	2	2	2	2	2	2	2	2	2	2	
	26t	26t	26t	26t	26t	26t	26t	26t	26t	26t	26t	26t	26t	26t	26t	26t	26t	26t	26t	26t	26t	26t	26t	26t	

油圧チルトジブ

HLJ	1.0m + 9.2m	7.1 t	8.0m x 6.2m	360 °	JPN

m	12.8	12.8	12.8	25.8	25.8	25.8	25.8	25.8	25.8	30.1	30.1	30.1	30.1	30.1	30.1	34.4	34.4	34.4	34.4	34.4	34.4	34.4	34.4	34.4	m
°	5	20	40	5	20	40	5	20	40	5	20	40	5	20	40	5	20	40	5	20	40	5	20	40	°
3.0																									3.0
3.5																									3.5
4.0	15.0																								4.0
4.5	15.0																								4.5
5.0	15.0	13.5																							5.0
6.0	15.0	12.4			14.4			14.1																	6.0
7.0	14.8	11.4	8.9	15.0	13.5		14.3	13.3			13.6			13.8			13.8			13.4					7.0
8.0	13.4	10.6	8.4	15.0	12.8		14.3	12.5		15.0	12.9		15.0	13.1			13.2			13.3			10.1		8.0
9.0	12.2	9.9	8.0	15.0	12.1	8.7	14.0	11.9	8.6	15.0	12.3	8.8	15.0	12.5	8.8	15.0	12.6		13.4	12.7			10.1		9.0
10.0	11.2	9.2	7.6	15.0	11.5	8.4	13.2	11.3	8.4	15.0	11.8	8.5	15.0	11.9	8.6	15.0	12.1	8.6	13.4	12.2	8.6	10.1	10.1		10.0
11.0	10.4	8.7	7.3	15.0	10.9	8.2	12.5	10.8	8.1	15.0	11.3	8.3	15.0	11.4	8.3	15.0	11.6	8.4	13.4	11.7	8.4	10.1	10.1	8.3	11.0
12.0	9.6	8.2	7.0	13.6	10.4	7.9	11.7	10.3	7.9	12.9	10.8	8.1	13.9	10.9	8.1	13.2	11.1	8.2	13.4	11.2	8.2	10.1	10.1	8.1	12.0
14.0	8.4	7.4	6.5	10.1	9.6	7.5	10.3	9.4	7.4	9.4	10.0	7.7	10.4	10.1	7.7	9.7	10.3	7.8	10.7	10.4	7.8	10.1	9.9	7.8	14.0
16.0	7.5	6.8		7.7	8.5	7.1	9.1	8.4	7.1	7.0	7.9	7.3	7.9	8.7	7.3	7.3	8.2	7.5	8.3	9.0	7.5	9.5	9.2	7.4	16.0
18.0	6.8			6.0	6.6	6.8	7.8	7.6	6.8	5.3	6.0	6.8	6.2	6.8	7.0	5.6	6.3	7.1	6.5	7.1	7.2	7.7	8.2	7.1	18.0
20.0				4.6	5.1	5.7	6.4	6.8	6.5	4.0	4.6	5.3	4.8	5.4	5.9	4.2	4.8	5.5	5.1	5.7	6.2	6.3	6.7	6.9	20.0
22.0				3.5	4.0	4.4	5.3	5.6	5.9	2.9	3.5	4.0	3.7	4.2	4.7	3.2	3.7	4.3	4.0	4.5	5.0	5.2	5.5	5.9	22.0
24.0				2.7	3.1		4.4	4.7		2.1	2.5	3.0	2.9	3.3	3.7	2.3	2.8	3.3	3.2	3.6	4.0	4.3	4.6	4.9	24.0
26.0				2.0	2.3		3.7	3.9		1.4	1.8		2.2	2.5		1.6	2.0	2.4	2.5	2.8	3.2	3.5	3.8	4.1	26.0
28.0				1.4	1.6		3.1	3.2					1.6	1.9			1.4		1.9	2.2		2.9	3.2		28.0
30.0							2.5							1.3					1.4	1.6		2.4	2.6		30.0
32.0																				1.2		2.0	2.1		32.0
34.0																						1.6	1.7		34.0
36.0																						1.2			36.0
38.0																									38.0
40.0																									40.0
44.0																									44.0
48.0																									48.0
52.0																									52.0
56.0																									56.0
60.0																									60.0
64.0																									64.0
68.0																									68.0
72.0																									72.0
1	0	0	0	46	46	46	0	0	0	92	92	92	46	46	46	92	92	92	46	46	46	0	0	0	1
2	0	0	0	46	46	46	0	0	0	46	46	46	46	46	46	46	46	46	46	46	46	0	0	0	2
3	0	0	0	46	46	46	0	0	0	46	46	46	46	46	46	46	46	46	46	46	46	46	46	46	3
4	0	0	0	0	0	0	46	46	46	0	0	0	46	46	46	46	46	46	46	46	46	92	92	92	4
5	0	0	0	0	0	0	92	92	92	0	0	0	0	0	0	0	0	0	46	46	46	92	92	92	5
ID	1	1	1	66	66	66	17	17	17	67	67	67	54	54	54	55	55	55	49	49	49	19	19	19	ID
[DEG]	0~79	44~85	57~85	33~79	37~85	56~85	27~79	37~85	57~85	47~79	50~85	57~85	42~79	41~85	57~85	52~79	51~85	58~85	45~79	44~85	58~85	32~79	40~85	59~85	[DEG]
	2	2	2	2	2	2	2	2	2	2	2	2	2	2	2	2	2	2	2	2	2	2	2	2	
	26t	26t	26t	26t	26t	26t	26t	26t	26t	26t	26t	26t	26t	26t	26t	26t	26t	26t	26t	26t	26t	26t	26t	26t	

m	43.0	43.0	43.0	43.0	43.0	43.0	47.4	47.4	47.4	47.4	47.4	47.4	51.7	51.7	51.7	51.7	51.7	51.7	56.0	56.0	56.0	60.0	60.0	60.0	m
°	5	20	40	5	20	40	5	20	40	5	20	40	5	20	40	5	20	40	5	20	40	5	20	40	°
3.0																									3.0
3.5																									3.5
4.0																									4.0
4.5																									4.5
5.0																									5.0
6.0																									6.0
7.0																									7.0
8.0																									8.0
9.0		10.6			7.2																				9.0
10.0		10.6			7.2			8.4			7.5														10.0
11.0		10.6			7.2			8.4			7.5			7.0			6.4			6.4					11.0
12.0	10.6	10.6	8.3	7.2	7.2	7.2		8.4			7.5			7.0			6.4			6.4			5.7		12.0
14.0	9.9	10.6	7.9	7.2	7.2	7.2	8.4	8.4	8.0	7.5	7.5	7.5		7.0	7.0	6.4	6.4	6.4		6.4			5.7		14.0
16.0	7.5	8.4	7.6	7.2	7.2	7.2	7.8	8.4	7.7	7.5	7.5	7.5	7.0	7.0	7.0	6.4	6.4	6.4	6.4	6.4	6.4		5.7	5.7	16.0
18.0	5.7	6.5	7.3	7.2	7.2	7.2	6.0	6.7	7.4	6.6	7.2	7.5	6.1	6.9	7.0	6.4	6.4	6.4	6.4	6.4	6.4	5.7	5.7	5.7	18.0
20.0	4.4	5.0	5.7	6.0	6.5	7.1	4.6	5.3	6.0	5.2	5.8	6.4	4.8	5.4	6.1	5.4	6.0	6.4	5.0	5.6	6.3	5.0	5.6	5.7	20.0
22.0	3.3	3.9	4.5	4.9	5.3	5.8	3.6	4.1	4.7	4.1	4.6	5.2	3.7	4.2	4.9	4.3	4.8	5.4	3.9	4.5	5.1	3.9	4.4	5.0	22.0
24.0	2.5	3.0	3.5	4.0	4.4	4.8	2.7	3.2	3.7	3.2	3.7	4.2	2.8	3.3	3.9	3.4	3.9	4.4	3.0	3.5	4.1	3.0	3.5	4.0	24.0
26.0	1.8	2.2	2.7	3.3	3.6	4.0	2.0	2.4	2.9	2.5	2.9	3.3	2.1	2.5	3.0	2.7	3.1	3.5	2.3	2.7	3.2	2.3	2.7	3.2	26.0
28.0		1.6	2.0	2.7	3.0	3.3		1.8	2.2	1.9	2.3	2.6		1.9	2.3	2.1	2.5	2.8	1.7	2.1	2.5		2.1	2.5	28.0
30.0			1.4	2.2	2.4	2.7			1.6		1.7	2.0			1.7	1.6	1.9	2.2			1.9			1.9	30.0
32.0				1.7	1.9	2.2						1.5					1.4	1.7							32.0
34.0				1.3	1.5																				34.0
36.0					1.2																				36.0
38.0																									38.0
40.0																									40.0
44.0																									44.0
48.0																									48.0
52.0																									52.0
56.0																									56.0
60.0																									60.0
64.0																									64.0
68.0																									68.0
72.0																									72.0
1	92	92	92	0	0	0	92	92	92	46	46	46	92	92	92	46	46	46	92	92	92	100	100	100	1
2	92	92	92	46	46	46	92	92	92	92	92	92	92	92	92	92	92	92	92	92	92	100	100	100	2
3	46	46	46	92	92	92	92	92	92	92	92	92	92	92	92	92	92	92	92	92	92	100	100	100	3
4	46	46	46	92	92	92	46	46	46	92	92	92	92	92	92	92	92	92	92	92	92	100	100	100	4
5	46	46	46	92	92	92	46	46	46	46	46	46	46	46	46	92	92	92	92	92	92	100	100	100	5
ID	42	42	42	21	21	21	38	38	38	31	31	31	32	32	32	23	23	23	24	24	24	16	16	16	ID
[DEG]	60~79	60~85	59~85	49~79	49~85	57~85	63~79	63~85	63~85	61~79	61~85	60~85	66~79	66~85	66~85	61~79	61~85	63~85	66~79	68~85	68~85	70~79	70~85	70~85	[DEG]
	2	2	2	1	1	1	1	1	1	1	1	1	1	1	1	1	1	1	1	1	1	1	1	1	
	26t	26t	26t	8.7t	8.7t	8.7t	8.7t	8.7t	8.7t	8.7t	8.7t	8.7t	8.7t	8.7t	8.7t	8.7t	8.7t	8.7t	8.7t	8.7t	8.7t	8.7t	8.7t	8.7t	

HLJ	1.0m + 17.0m	7.1 t	8.0m x 6.2m	360 °	JPN

m	12.8	12.8	12.8	25.8	25.8	25.8	25.8	25.8	25.8	30.1	30.1	30.1	30.1	30.1	30.1	34.4	34.4	34.4	34.4	34.4	34.4	34.4	34.4	34.4	m
°	5	20	40	5	20	40	5	20	40	5	20	40	5	20	40	5	20	40	5	20	40	5	20	40	°
3.0																									3.0
3.5																									3.5
4.0																									4.0
4.5																									4.5
5.0																									5.0
6.0	7.3																								6.0
7.0	6.8																								7.0
8.0	6.4	5.4		7.0			5.6																		8.0
9.0	6.0	5.1		6.7			5.6			6.7			6.5												9.0
10.0	5.7	4.8		6.4	5.0		5.6	4.8		6.5			6.3			6.3			5.9			4.6			10.0
11.0	5.3	4.6		6.1	4.8		5.6	4.6		6.2	4.9		6.1	4.8		6.1	4.8		5.9	4.7		4.6			11.0
12.0	5.1	4.4		5.8	4.7		5.5	4.5		6.0	4.7		5.9	4.6		5.9	4.7		5.7	4.6		4.6	4.4		12.0
14.0	4.6	4.0	3.5	5.4	4.4		5.1	4.2		5.5	4.4		5.4	4.4		5.5	4.4		5.4	4.3		4.6	4.2		14.0
16.0	4.2	3.7	3.3	5.0	4.1	3.4	4.8	3.9	3.3	5.1	4.2	3.4	5.1	4.1	3.4	5.2	4.2	3.4	5.1	4.1		4.6	4.0		16.0
18.0	3.8	3.4	3.1	4.6	3.9	3.3	4.4	3.7	3.2	4.8	3.9	3.3	4.8	3.9	3.3	4.9	3.9	3.3	4.8	3.9	3.2	4.6	3.8	3.2	18.0
20.0	3.5	3.2	3.0	4.3	3.7	3.1	4.2	3.5	3.1	4.5	3.7	3.2	4.5	3.7	3.2	4.6	3.8	3.2	4.5	3.7	3.1	4.3	3.6	3.1	20.0
22.0	3.3	3.1	2.9	4.1	3.5	3.0	3.9	3.4	3.0	4.0	3.6	3.1	4.2	3.5	3.0	4.2	3.6	3.1	4.3	3.5	3.0	4.1	3.5	3.0	22.0
24.0	3.1	2.9		3.7	3.3	2.9	3.7	3.2	2.9	3.2	3.4	3.0	3.8	3.4	2.9	3.3	3.5	3.0	4.0	3.4	2.9	3.9	3.3	2.9	24.0
26.0	3.0			3.0	3.2	2.9	3.5	3.1	2.8	2.2	3.1	2.9	3.1	3.2	2.9	2.3	3.3	2.9	3.2	3.3	2.9	3.7	3.2	2.8	26.0
28.0				2.2	2.9	2.8	3.4	3.0	2.7	1.4	2.2	2.8	2.3	3.0	2.8	1.5	2.4	2.8	2.5	3.2	2.8	3.5	3.1	2.7	28.0
30.0				1.5	2.1		3.2	2.9		0.8	1.5	2.3	1.6	2.2	2.7	0.9	1.6	2.5	1.8	2.4	2.7	2.9	3.0	2.7	30.0
32.0				0.9	1.4		2.6	2.8			0.8	1.5	1.0	1.6	2.1		1.0	1.7	1.2	1.8	2.4	2.4	2.8	2.6	32.0
34.0					0.9		2.1	2.4						1.0				1.1	0.8	1.3	1.8	1.9	2.2	2.6	34.0
36.0							1.7	1.9												0.8		1.4	1.8		36.0
38.0							1.3															1.1	1.4		38.0
40.0																							1.0		40.0
44.0																									44.0
48.0																									48.0
52.0																									52.0
56.0																									56.0
60.0																									60.0
64.0																									64.0
68.0																									68.0
72.0																									72.0
1	0	0	0	46	46	46	0	0	0	92	92	92	46	46	46	92	92	92	46	46	46	0	0	0	1
2	0	0	0	46	46	46	0	0	0	46	46	46	46	46	46	46	46	46	46	46	46	0	0	0	2
3	0	0	0	46	46	46	0	0	0	46	46	46	46	46	46	46	46	46	46	46	46	46	46	46	3
4	0	0	0	0	0	0	46	46	46	0	0	0	46	46	46	46	46	46	46	46	46	92	92	92	4
5	0	0	0	0	0	0	92	92	92	0	0	0	0	0	0	0	0	0	46	46	46	92	92	92	5
ID	1	1	1	66	66	66	17	17	17	67	67	67	54	54	54	55	55	55	49	49	49	19	19	19	ID
[DEG]	0~81	41~85	56~85	40~81	41~85	59~85	25~81	36~85	60~85	50~81	52~85	56~85	47~81	48~85	56~85	54~81	56~85	57~85	49~81	50~85	57~85	43~81	43~85	58~85	[DEG]
	1	1	1	1	1	1	1	1	1	1	1	1	1	1	1	1	1	1	1	1	1	1	1	1	
	8.7t	8.7t	8.7t	8.7t	8.7t	8.7t	8.7t	8.7t	8.7t	8.7t	8.7t	8.7t	8.7t	8.7t	8.7t	8.7t	8.7t	8.7t	8.7t	8.7t	8.7t	8.7t	8.7t	8.7t	

m	43.0	43.0	43.0	43.0	43.0	43.0	47.4	47.4	47.4	47.4	47.4	47.4	51.7	51.7	51.7	51.7	51.7	51.7	56.0	56.0	56.0	60.0	60.0	60.0	m
°	5	20	40	5	20	40	5	20	40	5	20	40	5	20	40	5	20	40	5	20	40	5	20	40	°
3.0																									3.0
3.5																									3.5
4.0																									4.0
4.5																									4.5
5.0																									5.0
6.0																									6.0
7.0																									7.0
8.0																									8.0
9.0																									9.0
10.0																									10.0
11.0																									11.0
12.0	5.5			4.1																					12.0
14.0	5.4	4.3		4.1	4.1		4.7	4.2		4.3	4.2		4.1			3.9									14.0
16.0	5.1	4.1		4.1	3.9		4.7	4.1		4.3	4.0		4.1	4.0		3.9	3.9		3.9	3.8		3.6	3.6		16.0
18.0	4.8	3.9	3.2	4.1	3.8		4.7	3.9		4.3	3.8		4.1	3.8		3.9	3.7		3.9	3.7		3.6	3.6		18.0
20.0	4.6	3.8	3.1	4.1	3.6	3.1	4.6	3.7	3.1	4.3	3.7	3.1	4.1	3.7	3.1	3.9	3.6	3.0	3.9	3.6		3.6	3.5		20.0
22.0	4.2	3.6	3.0	4.1	3.5	3.0	4.1	3.6	3.0	4.3	3.5	3.0	4.1	3.5	3.0	3.9	3.5	2.9	3.9	3.5	2.9	3.6	3.4	2.9	22.0
24.0	3.3	3.5	3.0	4.0	3.3	2.9	3.2	3.5	2.9	3.7	3.4	2.9	3.3	3.4	2.9	3.9	3.4	2.9	3.5	3.3	2.9	3.4	3.3	2.8	24.0
26.0	2.4	3.3	2.9	3.7	3.2	2.8	2.3	3.3	2.9	3.0	3.3	2.8	2.4	3.3	2.8	3.1	3.2	2.8	2.6	3.2	2.8	2.5	3.2	2.8	26.0
28.0	1.6	2.4	2.8	3.1	3.1	2.7	1.5	2.4	2.8	2.1	3.0	2.8	1.6	2.5	2.8	2.3	3.1	2.7	1.8	2.7	2.7	1.7	2.6	2.7	28.0
30.0		1.7	2.6	2.4	3.0	2.7		1.7	2.6	1.5	2.2	2.7		1.7	2.6	1.6	2.3	2.7		1.9	2.7		1.8	2.6	30.0
32.0		1.1	1.8	1.8	2.4	2.6		1.0	1.8		1.6	2.3		1.1	1.9	1.1	1.7	2.4		1.3	2.1		1.2	2.0	32.0
34.0			1.2	1.3	1.8	2.3			1.2		1.0	1.7			1.3		1.2	1.8			1.5			1.4	34.0
36.0				0.9	1.4	1.8						1.1						1.3							36.0
38.0					1.0	1.3												0.8							38.0
40.0																									40.0
44.0																									44.0
48.0																									48.0
52.0																									52.0
56.0																									56.0
60.0																									60.0
64.0																									64.0
68.0																									68.0
72.0																									72.0
1	92	92	92	0	0	0	92	92	92	46	46	46	92	92	92	46	46	46	92	92	92	100	100	100	1
2	92	92	92	46	46	46	92	92	92	92	92	92	92	92	92	92	92	92	92	92	92	100	100	100	2
3	46	46	46	92	92	92	92	92	92	92	92	92	92	92	92	92	92	92	92	92	92	100	100	100	3
4	46	46	46	92	92	92	46	46	46	92	92	92	92	92	92	92	92	92	92	92	92	100	100	100	4
5	46	46	46	92	92	92	46	46	46	46	46	46	46	46	46	92	92	92	92	92	92	100	100	100	5
ID	42	42	42	21	21	21	38	38	38	31	31	31	32	32	32	23	23	23	24	24	24	16	16	16	ID
[DEG]	63~81	63~85	64~85	54~81	56~85	59~85	66~81	65~85	67~85	64~81	63~85	65~85	68~81	67~85	69~85	64~81	66~85	65~85	70~81	69~85	71~85	71~81	71~85	73~85	[DEG]
	1	1	1	1	1	1	1	1	1	1	1	1	1	1	1	1	1	1	1	1	1	1	1	1	
	8.7t	8.7t	8.7t	8.7t	8.7t	8.7t	8.7t	8.7t	8.7t	8.7t	8.7t	8.7t	8.7t	8.7t	8.7t	8.7t	8.7t	8.7t	8.7t	8.7t	8.7t	8.7t	8.7t	8.7t	

油圧チルトジブ

HLJ	1.0m + 24.0m	7.1 t	8.0m x 6.2m	360 °	JPN

m	12.8	12.8	12.8	25.8	25.8	25.8	25.8	25.8	25.8	30.1	30.1	30.1	30.1	30.1	30.1	34.4	34.4	34.4	34.4	34.4	34.4	34.4	34.4	34.4	m
°	5	20	40	5	20	40	5	20	40	5	20	40	5	20	40	5	20	40	5	20	40	5	20	40	°
3.0																									3.0
3.5																									3.5
4.0																									4.0
4.5																									4.5
5.0																									5.0
6.0																									6.0
7.0																									7.0
8.0	5.1																								8.0
9.0	5.1																								9.0
10.0	5.1			4.9			3.7																		10.0
11.0	5.1			4.9			3.7			4.6			4.3												11.0
12.0	5.1	4.5		4.9			3.7			4.6			4.3			4.2			4.0			3.2			12.0
14.0	4.8	4.0		4.9	4.4		3.7	3.7		4.6	4.4		4.3	4.3		4.2			4.0			3.2			14.0
16.0	4.3	3.6		4.9	4.1		3.7	3.7		4.6	4.1		4.3	4.1		4.2	4.1		4.0	4.0		3.2	3.2		16.0
18.0	3.8	3.3		4.6	3.8		3.7	3.7		4.6	3.8		4.3	3.9		4.2	3.9		4.0	3.8		3.2	3.2		18.0
20.0	3.4	3.0	2.6	4.3	3.5		3.7	3.4		4.4	3.6		4.3	3.6		4.2	3.6		4.0	3.7		3.2	3.2		20.0
22.0	3.1	2.7	2.4	4.1	3.2	2.6	3.7	3.2	2.5	4.2	3.3	2.6	4.2	3.4	2.6	4.2	3.4	2.6	4.0	3.4		3.2	3.2		22.0
24.0	2.8	2.5	2.2	3.7	3.0	2.4	3.7	3.0	2.4	3.7	3.1	2.5	4.0	3.1	2.5	3.7	3.2	2.5	3.9	3.2	2.5	3.2	3.2	2.5	24.0
26.0	2.6	2.3	2.1	3.5	2.8	2.3	3.4	2.8	2.3	2.9	2.9	2.4	3.5	3.0	2.4	3.0	3.0	2.4	3.6	3.1	2.4	3.2	3.0	2.4	26.0
28.0	2.4	2.2	2.0	2.9	2.7	2.2	3.2	2.6	2.2	2.2	2.8	2.3	2.9	2.8	2.3	2.2	2.9	2.3	2.9	2.9	2.3	3.2	2.8	2.3	28.0
30.0	2.2	2.0		2.2	2.5	2.1	2.9	2.5	2.1	1.5	2.5	2.2	2.2	2.6	2.2	1.5	2.6	2.2	2.3	2.7	2.2	3.2	2.7	2.2	30.0
32.0	2.0	1.9		1.6	2.4	2.0	2.8	2.4	2.0	0.9	1.8	2.1	1.6	2.4	2.1	1.0	1.9	2.1	1.7	2.5	2.1	2.7	2.6	2.1	32.0
34.0				1.1	1.8	2.0	2.5	2.3	2.0		1.2	2.0	1.1	1.8	2.0		1.3	2.1	1.2	1.9	2.1	2.2	2.5	2.1	34.0
36.0					1.3	1.9	2.1	2.1	1.9			1.5		1.3	2.0			1.6	0.8	1.4	2.0	1.7	2.2	2.0	36.0
38.0					0.8		1.7	2.0				1.0		0.9	1.5			1.1		1.0	1.6	1.4	1.8	1.9	38.0
40.0							1.4	1.7													1.2	1.0	1.4	1.8	40.0
44.0							0.8																0.8		44.0
48.0																									48.0
52.0																									52.0
56.0																									56.0
60.0																									60.0
64.0																									64.0
68.0																									68.0
72.0																									72.0
1	0	0	0	46	46	46	0	0	0	92	92	92	46	46	46	92	92	92	46	46	46	0	0	0	1
2	0	0	0	46	46	46	0	0	0	46	46	46	46	46	46	46	46	46	46	46	46	0	0	0	2
3	0	0	0	46	46	46	0	0	0	46	46	46	46	46	46	46	46	46	46	46	46	46	46	46	3
4	0	0	0	0	0	0	46	46	46	0	0	0	46	46	46	46	46	46	46	46	46	92	92	92	4
5	0	0	0	0	0	0	92	92	92	0	0	0	0	0	0	0	0	0	46	46	46	92	92	92	5
ID	1	1	1	66	66	66	17	17	17	67	67	67	54	54	54	55	55	55	49	49	49	19	19	19	ID
[DEG]	0~81	37~85	59~85	48~81	47~85	57~85	28~81	44~85	58~85	55~81	59~85	58~85	53~81	53~85	58~85	58~81	62~85	62~85	54~81	57~85	59~85	49~81	49~85	60~85	[DEG]
	1	1	1	1	1	1	1	1	1	1	1	1	1	1	1	1	1	1	1	1	1	1	1	1	
	8.7t	8.7t	8.7t	8.7t	8.7t	8.7t	8.7t	8.7t	8.7t	8.7t	8.7t	8.7t	8.7t	8.7t	8.7t	8.7t	8.7t	8.7t	8.7t	8.7t	8.7t	8.7t	8.7t	8.7t	

m	43.0	43.0	43.0	43.0	43.0	43.0	47.4	47.4	47.4	47.4	47.4	47.4	51.7	51.7	51.7	51.7	51.7	51.7	56.0	56.0	56.0	60.0	60.0	60.0	m
°	5	20	40	5	20	40	5	20	40	5	20	40	5	20	40	5	20	40	5	20	40	5	20	40	°
3.0																									3.0
3.5																									3.5
4.0																									4.0
4.5																									4.5
5.0																									5.0
6.0																									6.0
7.0																									7.0
8.0																									8.0
9.0																									9.0
10.0																									10.0
11.0																									11.0
12.0																									12.0
14.0	3.8			2.9																					14.0
16.0	3.8			2.9			3.3			3.1			3.0			2.9									16.0
18.0	3.8	3.8		2.9	2.9		3.3	3.3		3.1	3.1		3.0	3.0		2.9			2.9						18.0
20.0	3.8	3.6		2.9	2.9		3.3	3.3		3.1	3.1		3.0	3.0		2.9	2.9		2.9	2.9		2.4			20.0
22.0	3.8	3.5		2.9	2.9		3.3	3.3		3.1	3.1		3.0	3.0		2.9	2.9		2.9	2.9		2.4	2.4		22.0
24.0	3.7	3.3	2.5	2.9	2.9		3.3	3.3		3.1	3.1		3.0	3.0		2.9	2.9		2.9	2.9		2.4	2.4		24.0
26.0	2.9	3.2	2.4	2.9	2.9	2.4	2.8	3.2	2.4	3.1	3.1	2.4	2.9	3.0		2.9	2.9		2.9	2.9		2.4	2.4		26.0
28.0	2.1	3.0	2.3	2.9	2.9	2.3	2.0	3.0	2.3	2.6	3.0	2.3	2.1	3.0	2.3	2.7	2.9	2.3	2.2	2.9	2.3	2.1	2.4		28.0
30.0	1.4	2.5	2.3	2.7	2.8	2.2	1.3	2.4	2.3	1.9	2.8	2.3	1.4	2.4	2.3	2.0	2.9	2.3	1.5	2.5	2.3		2.3	2.0	30.0
32.0		1.8	2.2	2.1	2.7	2.2		1.7	2.2	1.3	2.2	2.2		1.7	2.2	1.4	2.2	2.2		1.8	2.2		1.7	2.0	32.0
34.0		1.2	2.1	1.6	2.3	2.1		1.2	2.1		1.6	2.1		1.2	2.1		1.7	2.2		1.3	2.2			1.9	34.0
36.0			1.6	1.2	1.8	2.1			1.6		1.1	1.9			1.6		1.2	2.0			1.6			1.5	36.0
38.0			1.1	0.8	1.4	2.0			1.1			1.4			1.1			1.5			1.1			1.0	38.0
40.0					1.0	1.5						1.0						1.1							40.0
44.0						0.8																			44.0
48.0																									48.0
52.0																									52.0
56.0																									56.0
60.0																									60.0
64.0																									64.0
68.0																									68.0
72.0																									72.0
1	92	92	92	0	0	0	92	92	92	46	46	46	92	92	92	46	46	46	92	92	92	100	100	100	1
2	92	92	92	46	46	46	92	92	92	92	92	92	92	92	92	92	92	92	92	92	92	100	100	100	2
3	46	46	46	92	92	92	92	92	92	92	92	92	92	92	92	92	92	92	92	92	92	100	100	100	3
4	46	46	46	92	92	92	46	46	46	92	92	92	92	92	92	92	92	92	92	92	92	100	100	100	4
5	46	46	46	92	92	92	46	46	46	46	46	46	46	46	46	92	92	92	92	92	92	100	100	100	5
ID	42	42	42	21	21	21	38	38	38	31	31	31	32	32	32	23	23	23	24	24	24	16	16	16	ID
[DEG]	66~81	67~85	68~85	58~81	61~85	61~85	68~81	69~85	70~85	66~81	67~85	68~85	70~81	71~85	72~85	68~81	70~85	70~85	72~81	73~85	74~85	75~81	76~85	75~85	[DEG]
	1	1	1	1	1	1	1	1	1	1	1	1	1	1	1	1	1	1	1	1	1	1	1	1	
	8.7t	8.7t	8.7t	8.7t	8.7t	8.7t	8.7t	8.7t	8.7t	8.7t	8.7t	8.7t	8.7t	8.7t	8.7t	8.7t	8.7t	8.7t	8.7t	8.7t	8.7t	8.7t	8.7t	8.7t	

HLJ	1.0m + 31.0m	7.1 t	8.0m x 6.2m	360 °	JPN

m	12.8	12.8	12.8	25.8	25.8	25.8	25.8	25.8	25.8	30.1	30.1	30.1	30.1	30.1	30.1	34.4	34.4	34.4	34.4	34.4	34.4	34.4	34.4	34.4	m
°	5	20	40	5	20	40	5	20	40	5	20	40	5	20	40	5	20	40	5	20	40	5	20	40	°
3.0																									3.0
3.5																									3.5
4.0																									4.0
4.5																									4.5
5.0																									5.0
6.0																									6.0
7.0																									7.0
8.0																									8.0
9.0																									9.0
10.0	3.5																								10.0
11.0	3.5																								11.0
12.0	3.5			3.3			2.6																		12.0
14.0	3.5			3.3			2.6			3.1			2.9			2.9			2.8			2.3			14.0
16.0	3.5	3.0		3.3			2.6			3.1			2.9			2.9			2.8			2.3			16.0
18.0	3.2	2.7		3.3	3.0		2.6	2.6		3.1	3.0		2.9	2.9		2.9			2.8			2.3			18.0
20.0	2.9	2.5		3.3	2.7		2.6	2.6		3.1	2.8		2.9	2.8		2.9	2.8		2.8	2.8		2.3	2.3		20.0
22.0	2.6	2.2		3.3	2.5		2.6	2.5		3.1	2.6		2.9	2.6		2.9	2.6		2.8	2.6		2.3	2.3		22.0
24.0	2.3	2.0	1.7	3.0	2.3		2.6	2.3		3.1	2.4		2.9	2.4		2.9	2.4		2.8	2.4		2.3	2.3		24.0
26.0	2.1	1.9	1.6	2.7	2.2	1.7	2.6	2.1		2.9	2.2		2.9	2.2		2.9	2.3		2.8	2.3		2.3	2.2		26.0
28.0	1.9	1.7	1.5	2.5	2.0	1.6	2.5	2.0	1.6	2.7	2.1	1.6	2.7	2.1	1.6	2.7	2.2	1.6	2.8	2.2		2.3	2.1		28.0
30.0	1.7	1.6	1.4	2.3	1.9	1.5	2.3	1.9	1.5	2.1	2.0	1.5	2.5	2.0	1.5	2.0	2.0	1.6	2.6	2.0	1.6	2.3	2.0	1.5	30.0
32.0	1.6	1.5	1.3	2.1	1.8	1.4	2.1	1.8	1.4	1.5	1.9	1.5	2.1	1.9	1.5	1.4	1.9	1.5	2.1	1.9	1.5	2.3	1.9	1.5	32.0
34.0	1.5	1.4	1.2	1.6	1.7	1.4	2.0	1.7	1.4		1.7	1.4	1.5	1.8	1.4		1.8	1.4	1.6	1.8	1.4	2.2	1.8	1.4	34.0
36.0	1.4	1.3	1.2	1.2	1.6	1.3	1.8	1.6	1.3		1.4	1.3	1.1	1.7	1.3		1.4	1.4	1.1	1.7	1.4	2.0	1.7	1.4	36.0
38.0	1.3	1.2			1.4	1.3	1.7	1.5	1.3		0.9	1.3		1.4	1.3			1.3		1.5	1.3	1.6	1.6	1.3	38.0
40.0	1.2				1.0	1.2	1.6	1.4	1.2			1.2		1.0	1.2			1.3		1.1	1.3	1.2	1.5	1.3	40.0
44.0							1.0	1.3							0.9						1.0		1.1	1.2	44.0
48.0								0.8																0.9	48.0
52.0																									52.0
56.0																									56.0
60.0																									60.0
64.0																									64.0
68.0																									68.0
72.0																									72.0
1	0	0	0	46	46	46	0	0	0	92	92	92	46	46	46	92	92	92	46	46	46	0	0	0	1
2	0	0	0	46	46	46	0	0	0	46	46	46	46	46	46	46	46	46	46	46	46	0	0	0	2
3	0	0	0	46	46	46	0	0	0	46	46	46	46	46	46	46	46	46	46	46	46	46	46	46	3
4	0	0	0	0	0	0	46	46	46	0	0	0	46	46	46	46	46	46	46	46	46	92	92	92	4
5	0	0	0	0	0	0	92	92	92	0	0	0	0	0	0	0	0	0	46	46	46	92	92	92	5
ID	1	1	1	66	66	66	17	17	17	67	67	67	54	54	54	55	55	55	49	49	49	19	19	19	ID
[DEG]	0~81	40~85	56~85	54~81	55~85	63~85	43~81	42~85	64~85	62~81	61~85	66~85	57~81	59~85	60~85	64~81	67~85	69~85	60~81	62~85	64~85	57~81	59~85	59~85	[DEG]
	1	1	1	1	1	1	1	1	1	1	1	1	1	1	1	1	1	1	1	1	1	1	1	1	
	8.7t	8.7t	8.7t	8.7t	8.7t	8.7t	8.7t	8.7t	8.7t	8.7t	8.7t	8.7t	8.7t	8.7t	8.7t	8.7t	8.7t	8.7t	8.7t	8.7t	8.7t	8.7t	8.7t	8.7t	

m	43.0	43.0	43.0	43.0	43.0	43.0	47.4	47.4	47.4	47.4	47.4	47.4	51.7	51.7	51.7	51.7	51.7	51.7	56.0	56.0	56.0				m
°	5	20	40	5	20	40	5	20	40	5	20	40	5	20	40	5	20	40	5	20	40				°
3.0																									3.0
3.5																									3.5
4.0																									4.0
4.5																									4.5
5.0																									5.0
6.0																									6.0
7.0																									7.0
8.0																									8.0
9.0																									9.0
10.0																									10.0
11.0																									11.0
12.0																									12.0
14.0																									14.0
16.0	2.7			2.1																					16.0
18.0	2.7			2.1			2.4			2.2			2.2			2.1									18.0
20.0	2.7			2.1			2.4			2.2			2.2			2.1									20.0
22.0	2.7	2.6		2.1	2.1		2.4	2.4		2.2	2.2		2.2			2.1			2.1						22.0
24.0	2.7	2.5		2.1	2.1		2.4	2.4		2.2	2.2		2.2	2.2		2.1	2.1		2.1	2.1					24.0
26.0	2.7	2.3		2.1	2.1		2.4	2.3		2.2	2.2		2.2	2.2		2.1	2.1		2.1	2.1					26.0
28.0	2.5	2.2		2.1	2.1		2.4	2.2		2.2	2.2		2.2	2.2		2.1	2.1		2.1	2.1					28.0
30.0	1.8	2.1	1.6	2.1	2.1		1.7	2.1		2.2	2.1		1.7	2.1		2.1	2.1		1.8	2.1					30.0
32.0		2.0	1.5	2.1	2.0	1.5		2.0	1.5	1.6	2.0	1.5		2.0		1.7	2.0			2.0					32.0
34.0		1.8	1.4	1.9	1.9	1.4		1.6	1.5		1.9	1.4		1.6	1.4		1.9	1.4		1.6	1.4				34.0
36.0		1.3	1.4	1.4	1.8	1.4		1.1	1.4		1.5	1.4			1.4		1.5	1.4			1.4				36.0
38.0			1.3	1.0	1.7	1.3			1.4		1.1	1.4			1.4		1.1	1.4			1.4				38.0
40.0			1.3		1.3	1.3			1.2			1.3			1.2			1.3			1.1				40.0
44.0						1.2																			44.0
48.0																									48.0
52.0																									52.0
56.0																									56.0
60.0																									60.0
64.0																									64.0
68.0																									68.0
72.0																									72.0
1	92	92	92	0	0	0	92	92	92	46	46	46	92	92	92	46	46	46	92	92	92				1
2	92	92	92	46	46	46	92	92	92	92	92	92	92	92	92	92	92	92	92	92	92				2
3	46	46	46	92	92	92	92	92	92	92	92	92	92	92	92	92	92	92	92	92	92				3
4	46	46	46	92	92	92	46	46	46	92	92	92	92	92	92	92	92	92	92	92	92				4
5	46	46	46	92	92	92	46	46	46	46	46	46	46	46	46	92	92	92	92	92	92				5
ID	42	42	42	21	21	21	38	38	38	31	31	31	32	32	32	23	23	23	24	24	24				ID
[DEG]	70~81	71~85	74~85	64~81	68~85	70~85	72~81	73~85	75~85	70~81	71~85	76~85	73~81	76~85	77~85	72~81	73~85	77~85	75~81	78~85	78~85				[DEG]
	1	1	1	1	1	1	1	1	1	1	1	1	1	1	1	1	1	1	1	1	1				
	8.7t	8.7t	8.7t	8.7t	8.7t	8.7t	8.7t	8.7t	8.7t	8.7t	8.7t	8.7t	8.7t	8.7t	8.7t	8.7t	8.7t	8.7t	8.7t	8.7t	8.7t				

油圧チルトジブ

HLJ	1.0m + 2.8m	7.1 t	8.0m x 5.0m	360 °	JPN

m	12.8	12.8	12.8	25.8	25.8	25.8	25.8	25.8	25.8	30.1	30.1	30.1	30.1	30.1	30.1	34.4	34.4	34.4	34.4	34.4	34.4	34.4	34.4	34.4	m
°	5	20	40	5	20	40	5	20	40	5	20	40	5	20	40	5	20	40	5	20	40	5	20	40	°
3.0		31.6	25.3																						3.0
3.5	38.1	30.3	24.6		31.4			25.0																	3.5
4.0	36.1	29.1	23.9		30.6	23.4		24.2						31.2											4.0
4.5	34.3	28.0	23.3		29.8	23.1		23.3	21.5		30.2			30.4											4.5
5.0	32.7	27.0	22.8		29.0	22.7		22.4	20.6		29.5	22.8		29.8	22.9		29.9			24.9			16.9		5.0
6.0	29.9	25.3	21.8		27.7	22.0		20.5	19.0		28.3	22.2		28.5	22.3		28.9	22.5		24.9	23.0		16.9	16.9	6.0
7.0	26.5	23.8	20.9		26.3	21.3		18.9	17.7		25.7	21.6		26.9	21.7		26.3	22.0		24.9	22.4		16.9	16.9	7.0
8.0	20.6	21.1	20.2	19.7	20.3	20.8	18.6	17.5	16.5		19.7	20.5		20.9	21.2		20.3	21.0		21.7	21.9		16.9	16.7	8.0
9.0	16.5	16.9		15.7	16.2	16.8	17.3	16.3	15.5	15.1	15.6	16.3	16.2	16.7	17.3		16.2	16.8		17.5	18.0		16.2	15.9	9.0
10.0	13.5	13.8		12.7	13.2	13.6	15.3	15.3	14.6	12.1	12.6	13.2	13.2	13.7	14.1		13.1	13.7	14.0	14.4	14.9		15.3	14.9	10.0
11.0	11.2	11.4		10.5	10.9	11.3	13.0	13.2	13.5	9.9	10.3	10.8	11.0	11.3	11.7	10.4	10.8	11.3	11.7	12.1	12.4	13.3	13.6	13.9	11.0
12.0	9.4	9.6		8.7	9.0	9.4	11.1	11.3	11.6	8.2	8.5	8.9	9.2	9.5	9.8	8.6	9.0	9.4	9.9	10.2	10.5	11.4	11.7	11.9	12.0
14.0				6.1	6.3	6.6	8.4	8.5	8.7	5.6	5.9	6.1	6.5	6.8	7.0	6.0	6.3	6.6	7.2	7.4	7.7	8.7	8.9	9.1	14.0
16.0				4.2	4.4	4.6	6.4	6.6	6.7	3.7	4.0	4.2	4.7	4.9	5.1	4.2	4.4	4.6	5.3	5.5	5.7	6.7	6.9	7.0	16.0
18.0				2.9	3.0		5.0	5.1		2.4	2.6	2.7	3.3	3.5	3.6	2.8	3.0	3.2	3.9	4.1	4.2	5.3	5.4	5.5	18.0
20.0				1.8	1.9		3.9	4.0			1.5		2.2	2.4		1.8	1.9	2.1	2.8	3.0	3.1	4.2	4.3	4.4	20.0
22.0							3.1	3.1					1.4	1.5					2.0	2.1		3.3	3.4		22.0
24.0							2.4												1.3	1.4		2.6	2.6		24.0
26.0																						2.0	2.0		26.0
28.0																						1.5	1.5		28.0
30.0																									30.0
32.0																									32.0
34.0																									34.0
36.0																									36.0
38.0																									38.0
40.0																									40.0
44.0																									44.0
48.0																									48.0
52.0																									52.0
56.0																									56.0
60.0																									60.0
64.0																									64.0
68.0																									68.0
72.0																									72.0
1	0	0	0	46	46	46	0	0	0	92	92	92	46	46	46	92	92	92	46	46	46	0	0	0	1
2	0	0	0	46	46	46	0	0	0	46	46	46	46	46	46	46	46	46	46	46	46	0	0	0	2
3	0	0	0	46	46	46	0	0	0	46	46	46	46	46	46	46	46	46	46	46	46	46	46	46	3
4	0	0	0	0	0	0	46	46	46	0	0	0	46	46	46	46	46	46	46	46	46	92	92	92	4
5	0	0	0	0	0	0	92	92	92	0	0	0	0	0	0	0	0	0	46	46	46	92	92	92	5
ID	1	1	1	66	66	66	17	17	17	67	67	67	54	54	54	55	55	55	49	49	49	19	19	19	ID
[DEG]	0~76	34~85	58~85	43~76	44~85	56~85	28~76	37~85	56~85	55~76	52~85	57~85	46~76	47~85	57~85	56~76	57~85	58~85	49~76	49~85	58~85	39~76	40~85	58~85	[DEG]
	5	5	5	4	4	4	3	3	3	4	4	4	4	4	4	4	4	4	3	3	3	2	2	2	
	60t	60t	60t	60t	60t	60t	26t	26t	26t	60t	60t	60t	60t	60t	60t	60t	60t	60t	26t	26t	26t	26t	26t	26t	

m	43.0	43.0	43.0	43.0	43.0	43.0	47.4	47.4	47.4	51.7	51.7	51.7	m
°	5	20	40	5	20	40	5	20	40	5	20	40	°
3.0													3.0
3.5													3.5
4.0													4.0
4.5													4.5
5.0													5.0
6.0													6.0
7.0		17.1	17.1		12.1	12.1		12.4					7.0
8.0		17.1	17.1		12.1	12.1		12.4	12.4		9.8		8.0
9.0		16.9	17.1		12.1	12.1		12.4	12.4		9.8	9.8	9.0
10.0		13.9	14.4		12.1	12.1		12.4	12.4		9.8	9.8	10.0
11.0		11.5	11.9		12.1	12.1		12.3	12.4		9.8	9.8	11.0
12.0		9.7	10.0		11.4	11.7		10.5	10.8		9.8	9.8	12.0
14.0	6.6	6.9	7.2	8.4	8.6	8.8		7.7	8.0		8.0	8.3	14.0
16.0	4.8	5.0	5.3	6.4	6.6	6.8	5.5	5.8	6.0	5.8	6.0	6.3	16.0
18.0	3.4	3.6	3.8	5.0	5.1	5.3	4.1	4.3	4.5	4.4	4.6	4.8	18.0
20.0	2.3	2.5	2.6	3.9	4.0	4.1	3.0	3.2	3.4	3.3	3.5	3.6	20.0
22.0			1.7	3.0	3.1	3.2	2.2	2.3	2.4	2.5	2.6	2.7	22.0
24.0				2.3	2.4	2.5		1.6	1.7	1.7	1.9	2.0	24.0
26.0				1.7	1.8	1.9							26.0
28.0				1.2	1.3								28.0
30.0													30.0
32.0													32.0
34.0													34.0
36.0													36.0
38.0													38.0
40.0													40.0
44.0													44.0
48.0													48.0
52.0													52.0
56.0													56.0
60.0													60.0
64.0													64.0
68.0													68.0
72.0													72.0
1	92	92	92	0	0	0	46	46	46	46	46	46	1
2	92	92	92	46	46	46	92	92	92	92	92	92	2
3	46	46	46	92	92	92	92	92	92	92	92	92	3
4	46	46	46	92	92	92	92	92	92	92	92	92	4
5	46	46	46	92	92	92	46	46	46	92	92	92	5
ID	42	42	42	21	21	21	31	31	31	23	23	23	ID
[DEG]	64~76	65~85	63~85	52~76	53~85	57~85	64~76	62~85	63~85	64~76	65~85	66~85	[DEG]
	2	2	2	2	2	2	2	2	2	2	2	2	
	26t	26t	26t	26t	26t	26t	26t	26t	26t	26t	26t	26t	

HLJ	1.0m + 9.2m	7.1 t	8.0m x 5.0m	360 °	JPN

m	12.8	12.8	12.8	25.8	25.8	25.8	25.8	25.8	25.8	30.1	30.1	30.1	30.1	30.1	30.1	34.4	34.4	34.4	34.4	34.4	34.4	34.4	34.4	34.4	m
°	5	20	40	5	20	40	5	20	40	5	20	40	5	20	40	5	20	40	5	20	40	5	20	40	°
3.0																									3.0
3.5																									3.5
4.0	15.0																								4.0
4.5	15.0																								4.5
5.0	15.0	13.5																							5.0
6.0	15.0	12.4			14.4			14.1																	6.0
7.0	14.8	11.4	8.9	15.0	13.5		14.3	13.3			13.6			13.8			13.8			13.4					7.0
8.0	13.4	10.6	8.4	15.0	12.8		14.3	12.5		15.0	12.9		15.0	13.1			13.2			13.3			10.1		8.0
9.0	12.2	9.9	8.0	15.0	12.1	8.7	14.0	11.9	8.6	15.0	12.3	8.8	15.0	12.5	8.8	15.0	12.6		13.4	12.7			10.1		9.0
10.0	11.2	9.2	7.6	13.9	11.5	8.4	13.2	11.3	8.4	13.1	11.8	8.5	14.1	11.9	8.6	13.4	12.1	8.6	13.4	12.2	8.6	10.1	10.1		10.0
11.0	10.4	8.7	7.3	11.6	10.9	8.2	12.5	10.8	8.1	10.9	11.3	8.3	11.9	11.4	8.3	11.2	11.6	8.4	12.2	11.7	8.4	10.1	10.1	8.3	11.0
12.0	9.6	8.2	7.0	9.8	10.4	7.9	11.7	10.3	7.9	9.1	10.4	8.1	10.1	10.9	8.1	9.4	10.6	8.2	10.4	11.2	8.2	10.1	10.1	8.1	12.0
14.0	8.4	7.4	6.5	7.2	8.1	7.5	9.1	9.4	7.4	6.5	7.5	7.7	7.4	8.3	7.7	6.8	7.7	7.8	7.7	8.6	7.8	8.9	9.6	7.8	14.0
16.0	6.7	6.8		5.3	6.0	6.9	7.1	7.7	7.1	4.7	5.5	6.4	5.5	6.2	7.1	4.9	5.7	6.7	5.8	6.5	7.4	7.0	7.6	7.4	16.0
18.0	5.2			3.9	4.5	5.2	5.7	6.1	6.6	3.3	4.0	4.8	4.1	4.7	5.4	3.5	4.2	5.0	4.4	5.0	5.7	5.6	6.0	6.6	18.0
20.0				2.8	3.4	3.9	4.6	4.9	5.3	2.2	2.8	3.5	3.0	3.6	4.1	2.5	3.1	3.7	3.3	3.9	4.4	4.5	4.9	5.3	20.0
22.0				2.0	2.4	2.9	3.7	4.0	4.3		1.9	2.5	2.2	2.6	3.1	1.6	2.2	2.7	2.5	2.9	3.4	3.6	3.9	4.3	22.0
24.0				1.3	1.7		3.0	3.2				1.6	1.5	1.9	2.3			1.9	1.8	2.2	2.6	2.9	3.2	3.5	24.0
26.0							2.4	2.6						1.3						1.6	1.9	2.3	2.5	2.8	26.0
28.0							1.9	2.1														1.8	2.0		28.0
30.0							1.5															1.3	1.5		30.0
32.0																							1.2		32.0
34.0																									34.0
36.0																									36.0
38.0																									38.0
40.0																									40.0
44.0																									44.0
48.0																									48.0
52.0																									52.0
56.0																									56.0
60.0																									60.0
64.0																									64.0
68.0																									68.0
72.0																									72.0
1	0	0	0	46	46	46	0	0	0	92	92	92	46	46	46	92	92	92	46	46	46	0	0	0	1
2	0	0	0	46	46	46	0	0	0	46	46	46	46	46	46	46	46	46	46	46	46	0	0	0	2
3	0	0	0	46	46	46	0	0	0	46	46	46	46	46	46	46	46	46	46	46	46	46	46	46	3
4	0	0	0	0	0	0	46	46	46	0	0	0	46	46	46	46	46	46	46	46	46	92	92	92	4
5	0	0	0	0	0	0	92	92	92	0	0	0	0	0	0	0	0	0	46	46	46	92	92	92	5
ID	1	1	1	66	66	66	17	17	17	67	67	67	54	54	54	55	55	55	49	49	49	19	19	19	ID
[DEG]	0~79	44~85	57~85	44~79	48~85	56~85	27~79	37~85	56~85	58~79	57~85	57~85	50~79	50~85	57~85	58~79	61~85	61~85	55~79	55~85	58~85	45~79	44~85	58~85	[DEG]
	2	2	2	2	2	2	2	2	2	2	2	2	2	2	2	2	2	2	2	2	2	2	2	2	
	26t	26t	26t	26t	26t	26t	26t	26t	26t	26t	26t	26t	26t	26t	26t	26t	26t	26t	26t	26t	26t	26t	26t	26t	

m	43.0	43.0	43.0	43.0	43.0	43.0	47.4	47.4	47.4	47.4	47.4	47.4	51.7	51.7	51.7	51.7	51.7	51.7	56.0	56.0	56.0				m
°	5	20	40	5	20	40	5	20	40	5	20	40	5	20	40	5	20	40	5	20	40				°
3.0																									3.0
3.5																									3.5
4.0																									4.0
4.5																									4.5
5.0																									5.0
6.0																									6.0
7.0																									7.0
8.0																									8.0
9.0		10.6			7.2																				9.0
10.0		10.6			7.2			8.4			7.5														10.0
11.0		10.6			7.2			8.4			7.5			7.0			6.4			6.4					11.0
12.0	9.6	10.6	8.3	7.2	7.2	7.2		8.4			7.5			7.0			6.4			6.4					12.0
14.0	7.0	7.9	7.9	7.2	7.2	7.2	7.2	8.2	8.0	7.5	7.5	7.5		7.0	7.0	6.4	6.4	6.4		6.4					14.0
16.0	5.1	5.9	6.9	6.8	7.2	7.2	5.3	6.2	7.1	5.9	6.7	7.5	5.5	6.3	7.0	6.1	6.4	6.4	5.7	6.4	6.4				16.0
18.0	3.7	4.4	5.2	5.3	5.9	6.5	3.9	4.6	5.5	4.5	5.2	5.9	4.1	4.8	5.6	4.7	5.3	6.1	4.3	5.0	5.8				18.0
20.0	2.7	3.3	3.9	4.2	4.7	5.2	2.9	3.5	4.2	3.4	4.0	4.6	3.0	3.6	4.3	3.6	4.2	4.8	3.2	3.8	4.5				20.0
22.0	1.8	2.3	2.9	3.3	3.7	4.2	2.0	2.5	3.1	2.6	3.0	3.6	2.1	2.7	3.3	2.8	3.2	3.8	2.4	2.9	3.5				22.0
24.0		1.6	2.1	2.6	3.0	3.4		1.8	2.3	1.8	2.3	2.8		1.9	2.4	2.0	2.5	2.9		2.1	2.6				24.0
26.0				2.0	2.3	2.7					1.7	2.1			1.8		1.8	2.3			1.9				26.0
28.0				1.5	1.8	2.1						1.5						1.7							28.0
30.0					1.3	1.6																			30.0
32.0						1.2																			32.0
34.0																									34.0
36.0																									36.0
38.0																									38.0
40.0																									40.0
44.0																									44.0
48.0																									48.0
52.0																									52.0
56.0																									56.0
60.0																									60.0
64.0																									64.0
68.0																									68.0
72.0																									72.0
1	92	92	92	0	0	0	92	92	92	46	46	46	92	92	92	46	46	46	92	92	92				1
2	92	92	92	46	46	46	92	92	92	92	92	92	92	92	92	92	92	92	92	92	92				2
3	46	46	46	92	92	92	92	92	92	92	92	92	92	92	92	92	92	92	92	92	92				3
4	46	46	46	92	92	92	46	46	46	92	92	92	92	92	92	92	92	92	92	92	92				4
5	46	46	46	92	92	92	46	46	46	46	46	46	46	46	46	92	92	92	92	92	92				5
ID	42	42	42	21	21	21	38	38	38	31	31	31	32	32	32	23	23	23	24	24	24				ID
[DEG]	65~79	65~85	67~85	58~79	57~85	57~85	67~79	67~85	70~85	65~79	65~85	65~85	69~79	70~85	70~85	67~79	67~85	68~85	71~79	71~85	72~85				[DEG]
	2	2	2	1	1	1	1	1	1	1	1	1	1	1	1	1	1	1	1	1	1				
	26t	26t	26t	8.7t	8.7t	8.7t	8.7t	8.7t	8.7t	8.7t	8.7t	8.7t	8.7t	8.7t	8.7t	8.7t	8.7t	8.7t	8.7t	8.7t	8.7t				

油圧チルトジブ

HLJ	1.0m + 17.0m	7.1 t	8.0m x 5.0m	360 °	JPN

m	12.8	12.8	12.8	25.8	25.8	25.8	25.8	25.8	25.8	30.1	30.1	30.1	30.1	30.1	30.1	34.4	34.4	34.4	34.4	34.4	34.4	34.4	34.4	34.4	m
°	5	20	40	5	20	40	5	20	40	5	20	40	5	20	40	5	20	40	5	20	40	5	20	40	°
3.0																									3.0
3.5																									3.5
4.0																									4.0
4.5																									4.5
5.0																									5.0
6.0	7.3																								6.0
7.0	6.8																								7.0
8.0	6.4	5.4		7.0			5.6																		8.0
9.0	6.0	5.1		6.7			5.6			6.7			6.5												9.0
10.0	5.7	4.8		6.4	5.0		5.6	4.8		6.5			6.3			6.3			5.9			4.6			10.0
11.0	5.3	4.6		6.1	4.8		5.6	4.6		6.2	4.9		6.1	4.8		6.1	4.8		5.9	4.7		4.6			11.0
12.0	5.1	4.4		5.8	4.7		5.5	4.5		6.0	4.7		5.9	4.6		5.9	4.7		5.7	4.6		4.6	4.4		12.0
14.0	4.6	4.0	3.5	5.4	4.4		5.1	4.2		5.5	4.4		5.4	4.4		5.5	4.4		5.4	4.3		4.6	4.2		14.0
16.0	4.2	3.7	3.3	5.0	4.1	3.4	4.8	3.9	3.3	5.1	4.2	3.4	5.1	4.1	3.4	5.2	4.2	3.4	5.1	4.1		4.6	4.0		16.0
18.0	3.8	3.4	3.1	4.6	3.9	3.3	4.4	3.7	3.2	4.5	3.9	3.3	4.8	3.9	3.3	4.6	3.9	3.3	4.8	3.9	3.2	4.6	3.8	3.2	18.0
20.0	3.5	3.2	3.0	3.9	3.7	3.1	4.2	3.5	3.1	3.4	3.7	3.2	4.0	3.7	3.2	3.5	3.8	3.2	4.2	3.7	3.1	4.3	3.6	3.1	20.0
22.0	3.3	3.1	2.9	3.1	3.5	3.0	3.9	3.4	3.0	2.5	3.4	3.1	3.1	3.5	3.0	2.6	3.5	3.1	3.3	3.5	3.0	4.1	3.5	3.0	22.0
24.0	3.1	2.9		2.3	3.0	2.9	3.7	3.2	2.9	1.8	2.6	3.0	2.4	3.1	2.9	1.9	2.7	3.0	2.6	3.2	2.9	3.4	3.3	2.9	24.0
26.0	3.0			1.7	2.3	2.9	3.1	3.1	2.8		1.9	2.7	1.8	2.4	2.9		2.0	2.8	2.0	2.6	2.9	2.8	3.2	2.8	26.0
28.0				1.2	1.7	2.3	2.5	2.9	2.7			2.0	1.3	1.8	2.4		1.4	2.1	1.4	2.0	2.6	2.3	2.7	2.7	28.0
30.0					1.2		2.1	2.4				1.4		1.3	1.8			1.5		1.5	2.0	1.9	2.3	2.7	30.0
32.0							1.7	2.0							1.3						1.5	1.5	1.8	2.2	32.0
34.0							1.4	1.6														1.2	1.5	1.8	34.0
36.0							1.1	1.3															1.1		36.0
38.0																									38.0
40.0																									40.0
44.0																									44.0
48.0																									48.0
52.0																									52.0
56.0																									56.0
60.0																									60.0
64.0																									64.0
68.0																									68.0
72.0																									72.0
% 1	0	0	0	46	46	46	0	0	0	92	92	92	46	46	46	92	92	92	46	46	46	0	0	0	1
% 2	0	0	0	46	46	46	0	0	0	46	46	46	46	46	46	46	46	46	46	46	46	0	0	0	2
% 3	0	0	0	46	46	46	0	0	0	46	46	46	46	46	46	46	46	46	46	46	46	46	46	46	3
% 4	0	0	0	0	0	0	46	46	46	0	0	0	46	46	46	46	46	46	46	46	46	92	92	92	4
% 5	0	0	0	0	0	0	92	92	92	0	0	0	0	0	0	0	0	0	46	46	46	92	92	92	5
ID	1	1	1	66	66	66	17	17	17	67	67	67	54	54	54	55	55	55	49	49	49	19	19	19	ID
[DEG]	0~81	41~85	56~85	48~81	50~85	59~85	31~81	36~85	60~85	59~81	61~85	60~85	53~81	55~85	56~85	62~81	62~85	64~85	57~81	59~85	60~85	49~81	50~85	58~85	[DEG]
	1	1	1	1	1	1	1	1	1	1	1	1	1	1	1	1	1	1	1	1	1	1	1	1	
	8.7t	8.7t	8.7t	8.7t	8.7t	8.7t	8.7t	8.7t	8.7t	8.7t	8.7t	8.7t	8.7t	8.7t	8.7t	8.7t	8.7t	8.7t	8.7t	8.7t	8.7t	8.7t	8.7t	8.7t	

m	43.0	43.0	43.0	43.0	43.0	43.0	47.4	47.4	47.4	47.4	47.4	47.4	51.7	51.7	51.7	51.7	51.7	51.7	56.0	56.0	56.0	60.0	60.0	60.0	m
°	5	20	40	5	20	40	5	20	40	5	20	40	5	20	40	5	20	40	5	20	40	5	20	40	°
3.0																									3.0
3.5																									3.5
4.0																									4.0
4.5																									4.5
5.0																									5.0
6.0																									6.0
7.0																									7.0
8.0																									8.0
9.0																									9.0
10.0																									10.0
11.0																									11.0
12.0	5.5			4.1																					12.0
14.0	5.4	4.3		4.1	4.1		4.7	4.2		4.3	4.2		4.1			3.9									14.0
16.0	5.1	4.1		4.1	3.9		4.7	4.1		4.3	4.0		4.1	4.0		3.9	3.9		3.9	3.8		3.6	3.6		16.0
18.0	4.6	3.9	3.2	4.1	3.8		4.6	3.9		4.3	3.8		4.1	3.8		3.9	3.7		3.9	3.7		3.6	3.6		18.0
20.0	3.5	3.8	3.1	4.1	3.6	3.1	3.5	3.7	3.1	3.9	3.7	3.1	3.5	3.7	3.1	3.9	3.6	3.0	3.7	3.6		3.6	3.5		20.0
22.0	2.6	3.5	3.0	3.8	3.5	3.0	2.6	3.5	3.0	3.0	3.5	3.0	2.6	3.5	3.0	3.2	3.5	2.9	2.8	3.5	2.9	2.7	3.4	2.9	22.0
24.0	1.9	2.7	3.0	3.0	3.3	2.9	1.9	2.7	2.9	2.3	3.1	2.9	1.9	2.8	2.9	2.4	3.2	2.9	2.1	2.9	2.9	2.0	2.8	2.8	24.0
26.0		2.0	2.9	2.4	3.0	2.8		2.0	2.9	1.7	2.4	2.8		2.1	2.8	1.8	2.5	2.8		2.2	2.8		2.2	2.8	26.0
28.0			2.2	1.9	2.4	2.7			2.2		1.8	2.5			2.3		1.9	2.6			2.4			2.4	28.0
30.0			1.6	1.5	1.9	2.5			1.6			2.0			1.7			2.1			1.8			1.8	30.0
32.0					1.5	2.0						1.5						1.6							32.0
34.0						1.6																			34.0
36.0						1.2																			36.0
38.0																									38.0
40.0																									40.0
44.0																									44.0
48.0																									48.0
52.0																									52.0
56.0																									56.0
60.0																									60.0
64.0																									64.0
68.0																									68.0
72.0																									72.0
% 1	92	92	92	0	0	0	92	92	92	46	46	46	92	92	92	46	46	46	92	92	92	100	100	100	1
% 2	92	92	92	46	46	46	92	92	92	92	92	92	92	92	92	92	92	92	92	92	92	100	100	100	2
% 3	46	46	46	92	92	92	92	92	92	92	92	92	92	92	92	92	92	92	92	92	92	100	100	100	3
% 4	46	46	46	92	92	92	46	46	46	92	92	92	92	92	92	92	92	92	92	92	92	100	100	100	4
% 5	46	46	46	92	92	92	46	46	46	46	46	46	46	46	46	92	92	92	92	92	92	100	100	100	5
ID	42	42	42	21	21	21	38	38	38	31	31	31	32	32	32	23	23	23	24	24	24	16	16	16	ID
[DEG]	67~81	69~85	69~85	61~81	63~85	62~85	69~81	71~85	71~85	68~81	69~85	69~85	71~81	73~85	73~85	70~81	71~85	71~85	73~81	75~85	75~85	75~81	76~85	76~85	[DEG]
	1	1	1	1	1	1	1	1	1	1	1	1	1	1	1	1	1	1	1	1	1	1	1	1	
	8.7t	8.7t	8.7t	8.7t	8.7t	8.7t	8.7t	8.7t	8.7t	8.7t	8.7t	8.7t	8.7t	8.7t	8.7t	8.7t	8.7t	8.7t	8.7t	8.7t	8.7t	8.7t	8.7t	8.7t	

HLJ	1.0m + 24.0m	7.1 t	8.0m x 5.0m	360 °	JPN

m	12.8	12.8	12.8	25.8	25.8	25.8	25.8	25.8	25.8	30.1	30.1	30.1	30.1	30.1	30.1	34.4	34.4	34.4	34.4	34.4	34.4	34.4	34.4	34.4	m
°	5	20	40	5	20	40	5	20	40	5	20	40	5	20	40	5	20	40	5	20	40	5	20	40	°
3.0																									3.0
3.5																									3.5
4.0																									4.0
4.5																									4.5
5.0																									5.0
6.0																									6.0
7.0																									7.0
8.0	5.1																								8.0
9.0	5.1																								9.0
10.0	5.1			4.9			3.7																		10.0
11.0	5.1			4.9			3.7			4.6			4.3												11.0
12.0	5.1	4.5		4.9			3.7			4.6			4.3			4.2			4.0			3.2			12.0
14.0	4.8	4.0		4.9	4.4		3.7	3.7		4.6	4.4		4.3	4.3		4.2			4.0			3.2			14.0
16.0	4.3	3.6		4.9	4.1		3.7	3.7		4.6	4.1		4.3	4.1		4.2	4.1		4.0	4.0		3.2	3.2		16.0
18.0	3.8	3.3		4.6	3.8		3.7	3.7		4.6	3.8		4.3	3.9		4.2	3.9		4.0	3.8		3.2	3.2		18.0
20.0	3.4	3.0	2.6	4.3	3.5		3.7	3.4		3.9	3.6		4.3	3.6		4.0	3.6		4.0	3.7		3.2	3.2		20.0
22.0	3.1	2.7	2.4	3.6	3.2	2.6	3.7	3.2	2.5	3.0	3.3	2.6	3.6	3.4	2.6	3.1	3.4	2.6	3.7	3.4		3.2	3.2		22.0
24.0	2.8	2.5	2.2	2.8	3.0	2.4	3.7	3.0	2.4	2.3	3.1	2.5	2.8	3.1	2.5	2.3	3.2	2.5	2.9	3.2	2.5	3.2	3.2	2.5	24.0
26.0	2.6	2.3	2.1	2.2	2.8	2.3	3.3	2.8	2.3	1.7	2.6	2.4	2.2	3.0	2.4	1.7	2.7	2.4	2.3	3.1	2.4	3.0	3.0	2.4	26.0
28.0	2.4	2.2	2.0	1.7	2.4	2.2	2.8	2.6	2.2		2.0	2.3	1.7	2.4	2.3		2.0	2.3	1.8	2.5	2.3	2.5	2.8	2.3	28.0
30.0	2.2	2.0		1.2	1.9	2.1	2.3	2.5	2.1		1.5	2.2		1.9	2.2		1.5	2.2	1.3	2.0	2.2	2.1	2.6	2.2	30.0
32.0	2.0	1.9			1.4	2.0	1.9	2.4	2.0			1.8		1.4	2.1			1.9		1.5	2.1	1.7	2.2	2.1	32.0
34.0						1.6	1.6	2.0	2.0			1.3			1.7			1.4			1.8	1.3	1.8	2.1	34.0
36.0						1.2	1.3	1.6	1.9						1.3						1.4		1.4	1.9	36.0
38.0							1.0	1.3															1.1	1.6	38.0
40.0								1.0																1.2	40.0
44.0																									44.0
48.0																									48.0
52.0																									52.0
56.0																									56.0
60.0																									60.0
64.0																									64.0
68.0																									68.0
72.0																									72.0
1	0	0	0	46	46	46	0	0	0	92	92	92	46	46	46	92	92	92	46	46	46	0	0	0	1
2	0	0	0	46	46	46	0	0	0	46	46	46	46	46	46	46	46	46	46	46	46	0	0	0	2
3	0	0	0	46	46	46	0	0	0	46	46	46	46	46	46	46	46	46	46	46	46	46	46	46	3
4	0	0	0	0	0	0	46	46	46	0	0	0	46	46	46	46	46	46	46	46	46	92	92	92	4
5	0	0	0	0	0	0	92	92	92	0	0	0	0	0	0	0	0	0	46	46	46	92	92	92	5
ID	1	1	1	66	66	66	17	17	17	67	67	67	54	54	54	55	55	55	49	49	49	19	19	19	ID
[DEG]	0~81	37~85	59~85	54~81	58~85	57~85	42~81	44~85	58~85	63~81	64~85	65~85	61~81	61~85	62~85	65~81	67~85	68~85	61~81	64~85	65~85	57~81	57~85	60~85	[DEG]
	1	1	1	1	1	1	1	1	1	1	1	1	1	1	1	1	1	1	1	1	1	1	1	1	
	8.7t	8.7t	8.7t	8.7t	8.7t	8.7t	8.7t	8.7t	8.7t	8.7t	8.7t	8.7t	8.7t	8.7t	8.7t	8.7t	8.7t	8.7t	8.7t	8.7t	8.7t	8.7t	8.7t	8.7t	

m	43.0	43.0	43.0	43.0	43.0	43.0	47.4	47.4	47.4	47.4	47.4	47.4	51.7	51.7	51.7	51.7	51.7	51.7	56.0	56.0	56.0				m
°	5	20	40	5	20	40	5	20	40	5	20	40	5	20	40	5	20	40	5	20	40				°
3.0																									3.0
3.5																									3.5
4.0																									4.0
4.5																									4.5
5.0																									5.0
6.0																									6.0
7.0																									7.0
8.0																									8.0
9.0																									9.0
10.0																									10.0
11.0																									11.0
12.0																									12.0
14.0	3.8			2.9																					14.0
16.0	3.8			2.9			3.3			3.1			3.0			2.9									16.0
18.0	3.8	3.8		2.9	2.9		3.3	3.3		3.1	3.1		3.0	3.0		2.9			2.9						18.0
20.0	3.8	3.6		2.9	2.9		3.3	3.3		3.1	3.1		3.0	3.0		2.9	2.9		2.9	2.9					20.0
22.0	3.0	3.5		2.9	2.9		2.9	3.3		3.1	3.1		2.9	3.0		2.9	2.9		2.9	2.9					22.0
24.0	2.2	3.3	2.5	2.9	2.9		2.2	3.3		2.6	3.1		2.2	3.0		2.7	2.9		2.3	2.9					24.0
26.0		2.6	2.4	2.6	2.9	2.4		2.6	2.4	2.0	2.9	2.4		2.6		2.0	2.9			2.7					26.0
28.0		2.0	2.3	2.1	2.8	2.3		2.0	2.3		2.3	2.3		2.0			2.4	2.3		2.1	2.3				28.0
30.0			2.3	1.6	2.3	2.2			2.3		1.8	2.3					1.8	2.3			2.3				30.0
32.0			1.9		1.8	2.2			1.9			2.1						2.2			2.0				32.0
34.0			1.4		1.5	2.1						1.7						1.8			1.5				34.0
36.0						1.7																			36.0
38.0						1.3																			38.0
40.0																									40.0
44.0																									44.0
48.0																									48.0
52.0																									52.0
56.0																									56.0
60.0																									60.0
64.0																									64.0
68.0																									68.0
72.0																									72.0
1	92	92	92	0	0	0	92	92	92	46	46	46	92	92		46	46	46	92	92	92				1
2	92	92	92	46	46	46	92	92	92	92	92	92	92	92		92	92	92	92	92	92				2
3	46	46	46	92	92	92	92	92	92	92	92	92	92	92		92	92	92	92	92	92				3
4	46	46	46	92	92	92	46	46	46	92	92	92	92	92		92	92	92	92	92	92				4
5	46	46	46	92	92	92	46	46	46	46	46	46	46	46		92	92	92	92	92	92				5
ID	42	42	42	21	21	21	38	38	38	31	31	31	32	32		23	23	23	24	24	24				ID
[DEG]	71~81	73~85	72~85	66~81	68~85	69~85	73~81	75~85	76~85	72~81	73~85	75~85	75~81	76~85		73~81	75~85	76~85	76~81	78~85	77~85				[DEG]
	1	1	1	1	1	1	1	1	1	1	1	1	1	1		1	1	1	1	1	1				
	8.7t	8.7t	8.7t	8.7t	8.7t	8.7t	8.7t	8.7t	8.7t	8.7t	8.7t	8.7t	8.7t	8.7t		8.7t	8.7t	8.7t	8.7t	8.7t	8.7t				

油圧チルトジブ

HLJ	1.0m + 31.0m	7.1 t	8.0m x 5.0m	360 °	JPN

m	12.8	12.8	12.8	25.8	25.8	25.8	25.8	25.8	25.8	30.1	30.1	30.1	30.1	30.1	30.1	34.4	34.4	34.4	34.4	34.4	34.4	34.4	34.4	34.4	m
°	5	20	40	5	20	40	5	20	40	5	20	40	5	20	40	5	20	40	5	20	40	5	20	40	°
3.0																									3.0
3.5																									3.5
4.0																									4.0
4.5																									4.5
5.0																									5.0
6.0																									6.0
7.0																									7.0
8.0																									8.0
9.0																									9.0
10.0	3.5																								10.0
11.0	3.5																								11.0
12.0	3.5			3.3			2.6																		12.0
14.0	3.5			3.3			2.6			3.1			2.9			2.9			2.8			2.3			14.0
16.0	3.5	3.0		3.3			2.6			3.1			2.9			2.9			2.8			2.3			16.0
18.0	3.2	2.7		3.3	3.0		2.6	2.6		3.1	3.0		2.9	2.9		2.9			2.8			2.3			18.0
20.0	2.9	2.5		3.3	2.7		2.6	2.6		3.1	2.8		2.9	2.8		2.9	2.8		2.8	2.8		2.3	2.3		20.0
22.0	2.6	2.2		3.3	2.5		2.6	2.5		3.1	2.6		2.9	2.6		2.9	2.6		2.8	2.6		2.3	2.3		22.0
24.0	2.3	2.0	1.7	3.0	2.3		2.6	2.3		2.7	2.4		2.9	2.4		2.6	2.4		2.8	2.4		2.3	2.3		24.0
26.0	2.1	1.9	1.6	2.5	2.2	1.7	2.6	2.1		2.0	2.2		2.5	2.2		2.0	2.3		2.5	2.3		2.3	2.2		26.0
28.0	1.9	1.7	1.5	2.0	2.0	1.6	2.5	2.0	1.6	1.5	2.1	1.6	2.0	2.1	1.6		2.2	1.6	2.0	2.2		2.3	2.1		28.0
30.0	1.7	1.6	1.4	1.5	1.9	1.5	2.3	1.9	1.5		2.0	1.5	1.5	2.0	1.5		2.0	1.6	1.5	2.0	1.6	2.2	2.0	1.5	30.0
32.0	1.6	1.5	1.3		1.8	1.4	2.1	1.8	1.4		1.5	1.5		1.9	1.5		1.5	1.5		1.9	1.5	1.8	1.9	1.5	32.0
34.0	1.5	1.4	1.2		1.5	1.4	1.7	1.7	1.4			1.4		1.5	1.4			1.4		1.5	1.4	1.4	1.8	1.4	34.0
36.0	1.4	1.3	1.2			1.3	1.4	1.6	1.3			1.3			1.3			1.4			1.4	1.1	1.7	1.4	36.0
38.0	1.3	1.2				1.3	1.2	1.5	1.3			1.2			1.3						1.3		1.4	1.3	38.0
40.0	1.2					1.1		1.3	1.2						1.1						1.2		1.1	1.3	40.0
44.0																								1.0	44.0
48.0																									48.0
52.0																									52.0
56.0																									56.0
60.0																									60.0
64.0																									64.0
68.0																									68.0
72.0																									72.0
1	0	0	0	46	46	46	0	0	0	92	92	92	46	46	46	92	92	92	46	46	46	0	0	0	1
2	0	0	0	46	46	46	0	0	0	46	46	46	46	46	46	46	46	46	46	46	46	0	0	0	2
3	0	0	0	46	46	46	0	0	0	46	46	46	46	46	46	46	46	46	46	46	46	46	46	46	3
4	0	0	0	0	0	0	46	46	46	0	0	0	46	46	46	46	46	46	46	46	46	92	92	92	4
5	0	0	0	0	0	0	92	92	92	0	0	0	0	0	0	0	0	0	46	46	46	92	92	92	5
ID	1	1	1	66	66	66	17	17	17	67	67	67	54	54	54	55	55	55	49	49	49	19	19	19	ID
[DEG]	0~81	40~85	56~85	61~81	64~85	63~85	52~81	57~85	64~85	66~81	69~85	69~85	64~81	67~85	66~85	70~81	71~85	74~85	66~81	69~85	69~85	61~81	63~85	65~85	[DEG]
	1	1	1	1	1	1	1	1	1	1	1	1	1	1	1	1	1	1	1	1	1	1	1	1	
	8.7t	8.7t	8.7t	8.7t	8.7t	8.7t	8.7t	8.7t	8.7t	8.7t	8.7t	8.7t	8.7t	8.7t	8.7t	8.7t	8.7t	8.7t	8.7t	8.7t	8.7t	8.7t	8.7t	8.7t	

m	43.0	43.0	43.0	43.0	43.0	43.0	47.4	47.4	47.4	47.4	47.4	47.4	51.7	51.7	51.7	51.7	51.7	51.7	m
°	5	20	40	5	20	40	5	20	40	5	20	40	5	20	40	5	20	40	°
3.0																			3.0
3.5																			3.5
4.0																			4.0
4.5																			4.5
5.0																			5.0
6.0																			6.0
7.0																			7.0
8.0																			8.0
9.0																			9.0
10.0																			10.0
11.0																			11.0
12.0																			12.0
14.0																			14.0
16.0	2.7			2.1															16.0
18.0	2.7			2.1			2.4			2.2			2.2			2.1			18.0
20.0	2.7			2.1			2.4			2.2			2.2			2.1			20.0
22.0	2.7	2.6		2.1	2.1		2.4	2.4		2.2	2.2		2.2			2.1			22.0
24.0	2.5	2.5		2.1	2.1		2.4	2.4		2.2	2.2		2.2	2.2		2.1	2.1		24.0
26.0	1.9	2.3		2.1	2.1			2.3		2.2	2.2			2.2		2.1	2.1		26.0
28.0		2.2		2.1	2.1			2.2			2.2			2.2			2.1		28.0
30.0		1.9	1.6	1.8	2.1			1.9			2.1			1.9			2.1		30.0
32.0			1.5	1.4	2.0	1.5					1.7	1.5					1.7		32.0
34.0			1.4		1.7	1.4						1.4							34.0
36.0			1.4		1.4	1.4						1.4							36.0
38.0						1.3						1.4							38.0
40.0						1.3													40.0
44.0																			44.0
48.0																			48.0
52.0																			52.0
56.0																			56.0
60.0																			60.0
64.0																			64.0
68.0																			68.0
72.0																			72.0
1	92	92	92	0	0	0	92	92		46	46	46	92	92		46	46		1
2	92	92	92	46	46	46	92	92		92	92	92	92	92		92	92		2
3	46	46	46	92	92	92	92	92		92	92	92	92	92		92	92		3
4	46	46	46	92	92	92	46	46		92	92	92	92	92		92	92		4
5	46	46	46	92	92	92	46	46		46	46	46	46	46		92	92		5
ID	42	42	42	21	21	21	38	38		31	31	31	32	32		23	23		ID
[DEG]	73~81	76~85	78~85	69~81	72~85	74~85	76~81	78~85		75~81	76~85	77~85	78~81	79~85		76~81	78~85		[DEG]
	1	1	1	1	1	1	1	1		1	1	1	1	1		1	1		
	8.7t	8.7t	8.7t	8.7t	8.7t	8.7t	8.7t	8.7t		8.7t	8.7t	8.7t	8.7t	8.7t		8.7t	8.7t		

HLJ	1.0m + 2.8m	0.0 t	8.0m x 7.5m	360 °	JPN

m	12.8	12.8	12.8	25.8	25.8	25.8	25.8	25.8	25.8	30.1	30.1	30.1	30.1	30.1	30.1	34.4	34.4	34.4	34.4	34.4	34.4	43.0	43.0	43.0	m
°	5	20	40	5	20	40	5	20	40	5	20	40	5	20	40	5	20	40	5	20	40	5	20	40	°
3.0		31.6	25.3																						3.0
3.5	38.1	30.3	24.6		31.4			25.0																	3.5
4.0	36.1	29.1	23.9		30.6	23.4		24.2						31.2											4.0
4.5	34.3	28.0	23.3		29.8	23.1		23.3	21.5		30.2			30.4											4.5
5.0	32.7	27.0	22.8		29.0	22.7		22.4	20.6		29.5	22.8		29.8	22.9		24.9			16.9					5.0
6.0	29.9	25.3	21.8		27.7	22.0		20.5	19.0		28.3	22.2		28.5	22.3		24.9	23.0		16.9	16.9				6.0
7.0	27.7	23.8	20.9		26.5	21.3		18.9	17.7		27.1	21.6		27.4	21.7		24.9	22.4		16.9	16.9		12.1	12.1	7.0
8.0	25.7	22.6	20.2	29.6	25.4	20.8	18.6	17.5	16.5		26.1	21.1		26.3	21.2		24.3	21.9		16.9	16.7		12.1	12.1	8.0
9.0	24.1	21.5		23.1	23.7	20.2	17.3	16.3	15.5	22.3	23.1	20.6	23.7	24.4	20.7		23.1	20.9		16.2	15.9		12.1	12.1	9.0
10.0	19.3	19.6		18.4	18.9	19.5	16.1	15.3	14.6	17.7	18.3	18.9	19.0	19.5	20.0	19.9	20.4	20.1		15.3	14.9		12.1	12.1	10.0
11.0	15.8	16.1		14.9	15.4	15.9	15.1	14.4	13.7	13.2	14.8	15.3	15.5	16.0	16.4	16.4	16.8	17.2	14.8	14.4	14.0		12.1	12.1	11.0
12.0	10.4	10.9		8.0	9.2	10.3	14.2	13.6	13.0	6.2	7.5	8.8	9.6	10.7	11.9	12.0	13.1	14.1	13.9	13.5	13.2		12.1	12.1	12.0
14.0				2.1	2.7	3.3	7.6	8.0	8.4	0.9	1.6	2.3	3.2	3.8	4.4	4.8	5.4	6.0	8.3	8.8	9.3	7.6	8.1	8.6	14.0
16.0							4.0	4.3	4.5					0.9	1.3	1.7	2.1	2.5	4.6	4.9	5.2	4.0	4.3	4.7	16.0
18.0							2.0	2.2											2.5	2.8	3.0	2.0	2.3	2.5	18.0
20.0							0.8	0.9											1.2	1.4	1.6	0.8	1.0	1.2	20.0
22.0																									22.0
24.0																									24.0
26.0																									26.0
28.0																									28.0
30.0																									30.0
32.0																									32.0
34.0																									34.0
36.0																									36.0
38.0																									38.0
40.0																									40.0
44.0																									44.0
48.0																									48.0
52.0																									52.0
56.0																									56.0
60.0																									60.0
64.0																									64.0
68.0																									68.0
72.0																									72.0
1	0	0	0	46	46	46	0	0	0	92	92	92	46	46	46	46	46	46	0	0	0	0	0	0	1
2	0	0	0	46	46	46	0	0	0	46	46	46	46	46	46	46	46	46	0	0	0	46	46	46	2
3	0	0	0	46	46	46	0	0	0	46	46	46	46	46	46	46	46	46	46	46	46	92	92	92	3
4	0	0	0	0	0	0	46	46	46	0	0	0	46	46	46	46	46	46	92	92	92	92	92	92	4
5	0	0	0	0	0	0	92	92	92	0	0	0	0	0	0	46	46	46	92	92	92	92	92	92	5
ID	1	1	1	66	66	66	17	17	17	67	67	67	54	54	54	49	49	49	19	19	19	21	21	21	ID
[DEG]	0~76	34~85	58~85	58~76	60~85	61~85	42~76	44~85	56~85	63~76	65~85	65~85	63~76	60~85	61~85	63~76	65~85	65~85	56~76	57~85	58~85	64~76	65~85	65~85	[DEG]
	5	5	5	4	4	4	3	3	3	4	4	4	4	4	4	3	3	3	2	2	2	2	2	2	
	60t	60t	60t	60t	60t	60t	26t	26t	26t	60t	60t	60t	60t	60t	60t	26t	26t	26t	26t	26t	26t	26t	26t	26t	

油圧チルトジブ

HLJ	1.0m + 9.2m	0.0 t	8.0m x 7.5m	360 °	JPN

m	12.8	12.8	12.8	25.8	25.8	25.8	25.8	25.8	25.8	30.1	30.1	30.1	30.1	30.1	30.1	34.4	34.4	34.4	34.4	34.4	34.4	34.4	34.4	34.4	m
°	5	20	40	5	20	40	5	20	40	5	20	40	5	20	40	5	20	40	5	20	40	5	20	40	°
3.0																									3.0
3.5																									3.5
4.0	15.0																								4.0
4.5	15.0																								4.5
5.0	15.0	13.5																							5.0
6.0	15.0	12.4			14.4			14.1																	6.0
7.0	14.8	11.4	8.9	15.0	13.5		14.3	13.3			13.6			13.8			13.8			13.4					7.0
8.0	13.4	10.6	8.4	15.0	12.8		14.3	12.5		15.0	12.9		15.0	13.1			13.2			13.3			10.1		8.0
9.0	12.2	9.9	8.0	15.0	12.1	8.7	14.0	11.9	8.6	15.0	12.3	8.8	15.0	12.5	8.8	15.0	12.6		13.4	12.7			10.1		9.0
10.0	11.2	9.2	7.6	15.0	11.5	8.4	13.2	11.3	8.4	15.0	11.8	8.5	15.0	11.9	8.6	15.0	12.1	8.6	13.4	12.2	8.6	10.1	10.1		10.0
11.0	10.4	8.7	7.3	15.0	10.9	8.2	12.5	10.8	8.1	15.0	11.3	8.3	15.0	11.4	8.3	15.0	11.6	8.4	13.4	11.7	8.4	10.1	10.1	8.3	11.0
12.0	9.6	8.2	7.0	13.6	10.4	7.9	11.7	10.3	7.9	12.8	10.8	8.1	13.9	10.9	8.1	13.2	11.1	8.2	13.4	11.2	8.2	10.1	10.1	8.1	12.0
14.0	8.4	7.4	6.5	9.9	9.6	7.5	10.3	9.4	7.4	9.2	10.0	7.7	10.2	10.1	7.7	9.5	10.3	7.8	10.5	10.4	7.8	10.1	9.9	7.8	14.0
16.0	7.5	6.8		7.4	8.2	7.1	9.1	8.4	7.1	6.7	7.6	7.3	7.6	8.4	7.3	7.0	7.9	7.5	8.0	8.8	7.5	9.3	9.2	7.4	16.0
18.0	6.8			5.6	6.3	6.8	7.5	7.6	6.8	4.9	5.7	6.5	5.8	6.5	7.0	5.2	6.0	6.8	6.2	6.8	7.2	7.4	7.9	7.1	18.0
20.0				4.3	4.8	5.4	6.1	6.5	6.5	3.6	4.2	4.9	4.5	5.0	5.6	3.9	4.5	5.2	4.8	5.3	6.0	6.0	6.4	6.9	20.0
22.0				3.2	3.7	4.1	5.0	5.3	5.7	2.6	3.1	3.7	3.4	3.9	4.4	2.8	3.4	4.0	3.7	4.2	4.7	4.9	5.3	5.7	22.0
24.0				2.3	2.7		4.1	4.4		1.7	2.2	2.7	2.5	3.0	3.4	2.0	2.4	2.9	2.9	3.3	3.7	4.0	4.3	4.7	24.0
26.0				1.7	2.0		3.4	3.6			1.4		1.8	2.2			1.7	2.1	2.1	2.5	2.9	3.3	3.5	3.8	26.0
28.0					1.3		2.8	3.0					1.3	1.6					1.6	1.9		2.7	2.9		28.0
30.0							2.3													1.3		2.1	2.4		30.0
32.0																						1.7	1.9		32.0
34.0																						1.3	1.5		34.0
36.0																									36.0
38.0																									38.0
40.0																									40.0
44.0																									44.0
48.0																									48.0
52.0																									52.0
56.0																									56.0
60.0																									60.0
64.0																									64.0
68.0																									68.0
72.0																									72.0
1	0	0	0	46	46	46	0	0	0	92	92	92	46	46	46	92	92	92	46	46	46	0	0	0	1
2	0	0	0	46	46	46	0	0	0	46	46	46	46	46	46	46	46	46	46	46	46	0	0	0	2
3	0	0	0	46	46	46	0	0	0	46	46	46	46	46	46	46	46	46	46	46	46	46	46	46	3
4	0	0	0	0	0	0	46	46	46	0	0	0	46	46	46	46	46	46	46	46	46	92	92	92	4
5	0	0	0	0	0	0	92	92	92	0	0	0	0	0	0	0	0	0	46	46	46	92	92	92	5
ID	1	1	1	66	66	66	17	17	17	67	67	67	54	54	54	55	55	55	49	49	49	19	19	19	ID
[DEG]	0~79	44~85	57~85	39~79	37~85	56~85	27~79	37~85	56~85	51~79	50~85	57~85	42~79	46~85	57~85	55~79	55~85	58~85	49~79	48~85	58~85	37~79	40~85	59~85	[DEG]
	2	2	2	2	2	2	2	2	2	2	2	2	2	2	2	2	2	2	2	2	2	2	2	2	
	26t	26t	26t	26t	26t	26t	26t	26t	26t	26t	26t	26t	26t	26t	26t	26t	26t	26t	26t	26t	26t	26t	26t	26t	

m	43.0	43.0	43.0	43.0	43.0	43.0	47.4	47.4	47.4	47.4	47.4	47.4	51.7	51.7	51.7	51.7	51.7	51.7	56.0	56.0	56.0	60.0	60.0	60.0	m
°	5	20	40	5	20	40	5	20	40	5	20	40	5	20	40	5	20	40	5	20	40	5	20	40	°
3.0																									3.0
3.5																									3.5
4.0																									4.0
4.5																									4.5
5.0																									5.0
6.0																									6.0
7.0																									7.0
8.0																									8.0
9.0		10.6			7.2																				9.0
10.0		10.6			7.2			8.4			7.5														10.0
11.0		10.6			7.2			8.4			7.5			7.0			6.4			6.4					11.0
12.0	10.6	10.6	8.3	7.2	7.2	7.2		8.4			7.5			7.0			6.4			6.4			5.7		12.0
14.0	9.7	10.6	7.9	7.2	7.2	7.2	8.4	8.4	8.0	7.5	7.5	7.5		7.0	7.0	6.4	6.4	6.4		6.4			5.7		14.0
16.0	7.2	8.1	7.6	7.2	7.2	7.2	7.5	8.4	7.7	7.5	7.5	7.5	7.0	7.0	7.0	6.4	6.4	6.4	6.4	6.4	6.4		5.7	5.7	16.0
18.0	5.4	6.2	7.0	7.1	7.2	7.2	5.6	6.4	7.3	6.3	7.0	7.5	5.8	6.6	7.0	6.4	6.4	6.4	6.0	6.4	6.4	5.7	5.7	5.7	18.0
20.0	4.0	4.7	5.4	5.7	6.2	6.8	4.3	4.9	5.7	4.9	5.5	6.1	4.4	5.1	5.8	5.1	5.7	6.3	4.7	5.3	6.0	4.6	5.3	5.7	20.0
22.0	3.0	3.6	4.2	4.6	5.1	5.5	3.2	3.8	4.4	3.8	4.3	4.9	3.4	3.9	4.6	4.0	4.5	5.1	3.6	4.1	4.8	3.5	4.1	4.7	22.0
24.0	2.1	2.6	3.2	3.7	4.1	4.5	2.3	2.9	3.4	2.9	3.4	3.9	2.5	3.0	3.6	3.1	3.6	4.1	2.7	3.2	3.8	2.7	3.2	3.7	24.0
26.0		1.9	2.4	3.0	3.3	3.7		2.1	2.6	2.2	2.6	3.1	1.8	2.2	2.7	2.4	2.8	3.2	2.0	2.4	2.9	2.0	2.4	2.9	26.0
28.0			1.7	2.4	2.7	3.0			1.9	1.6	2.0	2.4			2.0	1.8	2.2	2.6		1.8	2.2		1.8	2.2	28.0
30.0				1.9	2.1	2.4					1.4	1.8					1.6	2.0			1.6			1.6	30.0
32.0				1.4	1.7	1.9												1.5							32.0
34.0					1.3																				34.0
36.0																									36.0
38.0																									38.0
40.0																									40.0
44.0																									44.0
48.0																									48.0
52.0																									52.0
56.0																									56.0
60.0																									60.0
64.0																									64.0
68.0																									68.0
72.0																									72.0
1	92	92	92	0	0	0	92	92	92	46	46	46	92	92	92	46	46	46	92	92	92	100	100	100	1
2	92	92	92	46	46	46	92	92	92	92	92	92	92	92	92	92	92	92	92	92	92	100	100	100	2
3	46	46	46	92	92	92	92	92	92	92	92	92	92	92	92	92	92	92	92	92	92	100	100	100	3
4	46	46	46	92	92	92	46	46	46	92	92	92	92	92	92	92	92	92	92	92	92	100	100	100	4
5	46	46	46	92	92	92	46	46	46	46	46	46	46	46	46	92	92	92	92	92	92	100	100	100	5
ID	42	42	42	21	21	21	38	38	38	31	31	31	32	32	32	23	23	23	24	24	24	16	16	16	ID
[DEG]	63~79	62~85	62~85	52~79	52~85	57~85	65~79	65~85	65~85	61~79	60~85	63~85	66~79	68~85	68~85	63~79	63~85	63~85	68~79	68~85	68~85	70~79	70~85	70~85	[DEG]
	2	2	2	1	1	1	1	1	1	1	1	1	1	1	1	1	1	1	1	1	1	1	1	1	
	26t	26t	26t	8.7t	8.7t	8.7t	8.7t	8.7t	8.7t	8.7t	8.7t	8.7t	8.7t	8.7t	8.7t	8.7t	8.7t	8.7t	8.7t	8.7t	8.7t	8.7t	8.7t	8.7t	

HLJ	1.0m + 17.0m	0.0 t	8.0m x 7.5m	360 °	JPN

m	12.8	12.8	12.8	25.8	25.8	25.8	25.8	25.8	25.8	30.1	30.1	30.1	30.1	30.1	30.1	34.4	34.4	34.4	34.4	34.4	34.4	34.4	34.4	34.4	m
°	5	20	40	5	20	40	5	20	40	5	20	40	5	20	40	5	20	40	5	20	40	5	20	40	°
3.0																									3.0
3.5																									3.5
4.0																									4.0
4.5																									4.5
5.0																									5.0
6.0	7.3																								6.0
7.0	6.8																								7.0
8.0	6.4	5.4		7.0			5.6																		8.0
9.0	6.0	5.1		6.7			5.6			6.7			6.5												9.0
10.0	5.7	4.8		6.4	5.0		5.6	4.8		6.5			6.3			6.3			5.9			4.6			10.0
11.0	5.3	4.6		6.1	4.8		5.6	4.6		6.2	4.9		6.1	4.8		6.1	4.8		5.9	4.7		4.6			11.0
12.0	5.1	4.4		5.8	4.7		5.5	4.5		6.0	4.7		5.9	4.6		5.9	4.7		5.7	4.6		4.6	4.4		12.0
14.0	4.6	4.0	3.5	5.4	4.4		5.1	4.2		5.5	4.4		5.4	4.4		5.5	4.4		5.4	4.3		4.6	4.2		14.0
16.0	4.2	3.7	3.3	4.2	4.1	3.4	4.8	3.9	3.3	2.9	4.2	3.4	4.3	4.1	3.4	3.2	4.2	3.4	4.7	4.1		4.6	4.0		16.0
18.0	3.8	3.4	3.1	2.1	3.9	3.3	4.4	3.7	3.2	1.1	3.2	3.3	2.3	3.9	3.3	1.3	3.3	3.3	2.6	3.9	3.2	4.2	3.8	3.2	18.0
20.0	3.2	3.2	3.0	0.9	2.3	3.1	3.1	3.5	3.1		1.6	3.2	1.0	2.4	3.2		1.7	3.2	1.2	2.7	3.1	2.7	3.6	3.1	20.0
22.0	2.1	2.8	2.9		1.2	2.6	2.1	2.9	3.0			2.1		1.3	2.7			2.2		1.5	2.9	1.7	2.6	3.0	22.0
24.0	1.4	1.9				1.5	1.3	2.0	2.8			1.0			1.6			1.1			1.8	1.0	1.8	2.7	24.0
26.0	0.8							1.3	2.0						0.8						1.0		1.1	1.8	26.0
28.0									1.3															1.2	28.0
30.0																									30.0
32.0																									32.0
34.0																									34.0
36.0																									36.0
38.0																									38.0
40.0																									40.0
44.0																									44.0
48.0																									48.0
52.0																									52.0
56.0																									56.0
60.0																									60.0
64.0																									64.0
68.0																									68.0
72.0																									72.0
1	0	0	0	46	46	46	0	0	0	92	92	92	46	46	46	92	92	92	46	46	46	0	0	0	1
2	0	0	0	46	46	46	0	0	0	46	46	46	46	46	46	46	46	46	46	46	46	0	0	0	2
3	0	0	0	46	46	46	0	0	0	46	46	46	46	46	46	46	46	46	46	46	46	46	46	46	3
4	0	0	0	0	0	0	46	46	46	0	0	0	46	46	46	46	46	46	46	46	46	92	92	92	4
5	0	0	0	0	0	0	92	92	92	0	0	0	0	0	0	0	0	0	46	46	46	92	92	92	5
ID	1	1	1	66	66	66	17	17	17	67	67	67	54	54	54	55	55	55	49	49	49	19	19	19	ID
[DEG]	0~81	41~85	56~85	61~81	64~85	67~85	56~81	58~85	59~85	67~81	70~85	69~85	64~81	67~85	66~85	69~81	72~85	72~85	67~81	69~85	69~85	63~81	64~85	67~85	[DEG]
	1	1	1	1	1	1	1	1	1	1	1	1	1	1	1	1	1	1	1	1	1	1	1	1	
	8.7t	8.7t	8.7t	8.7t	8.7t	8.7t	8.7t	8.7t	8.7t	8.7t	8.7t	8.7t	8.7t	8.7t	8.7t	8.7t	8.7t	8.7t	8.7t	8.7t	8.7t	8.7t	8.7t	8.7t	

m	43.0	43.0	43.0	43.0	43.0	43.0	47.4	47.4	47.4	51.7	51.7	51.7	m
°	5	20	40	5	20	40	5	20	40	5	20	40	°
3.0													3.0
3.5													3.5
4.0													4.0
4.5													4.5
5.0													5.0
6.0													6.0
7.0													7.0
8.0													8.0
9.0													9.0
10.0													10.0
11.0													11.0
12.0	5.5			4.1									12.0
14.0	5.4	4.3		4.1	4.1		4.3	4.2		3.9			14.0
16.0	3.2	4.1		4.1	3.9		4.1	4.0		3.9	3.9		16.0
18.0	1.3	3.3	3.2	3.4	3.8		2.1	3.8		2.3	3.7		18.0
20.0		1.7	3.1	2.0	3.3	3.1	0.8	2.3	3.1	1.0	2.4	3.0	20.0
22.0			2.2	1.1	2.1	3.0		1.2	2.6		1.3	2.7	22.0
24.0			1.2		1.2	2.3			1.6			1.7	24.0
26.0						1.5			0.8			0.9	26.0
28.0						0.8							28.0
30.0													30.0
32.0													32.0
34.0													34.0
36.0													36.0
38.0													38.0
40.0													40.0
44.0													44.0
48.0													48.0
52.0													52.0
56.0													56.0
60.0													60.0
64.0													64.0
68.0													68.0
72.0													72.0
1	92	92	92	0	0	0	46	46	46	46	46	46	1
2	92	92	92	46	46	46	92	92	92	92	92	92	2
3	46	46	46	92	92	92	92	92	92	92	92	92	3
4	46	46	46	92	92	92	92	92	92	92	92	92	4
5	46	46	46	92	92	92	46	46	46	92	92	92	5
ID	42	42	42	21	21	21	31	31	31	23	23	23	ID
[DEG]	73~81	75~85	75~85	69~81	71~85	71~85	73~81	75~85	75~85	74~81	76~85	76~85	[DEG]
	1	1	1	1	1	1	1	1	1	1	1	1	
	8.7t	8.7t	8.7t	8.7t	8.7t	8.7t	8.7t	8.7t	8.7t	8.7t	8.7t	8.7t	

油圧チルトジブ

HLJ	1.0m + 24.0m	0.0 t	8.0m x 7.5m	360 °	JPN

m	12.8	12.8	12.8	25.8	25.8	25.8	25.8	25.8	25.8	30.1	30.1	30.1	30.1	30.1	30.1	34.4	34.4	34.4	34.4	34.4	34.4	34.4	34.4	34.4	m
°	5	20	40	5	20	40	5	20	40	5	20	40	5	20	40	5	20	40	5	20	40	5	20	40	°
3.0																									3.0
3.5																									3.5
4.0																									4.0
4.5																									4.5
5.0																									5.0
6.0																									6.0
7.0																									7.0
8.0	5.1																								8.0
9.0	5.1																								9.0
10.0	5.1			4.9			3.7																		10.0
11.0	5.1			4.9			3.7			4.6			4.3												11.0
12.0	5.1	4.5		4.9			3.7			4.6			4.3			4.2			4.0			3.2			12.0
14.0	4.8	4.0		4.9	4.4		3.7	3.7		4.6	4.4		4.3	4.3		4.2			4.0			3.2			14.0
16.0	4.3	3.6		4.9	4.1		3.7	3.7		4.6	4.1		4.3	4.1		4.2	4.1		4.0	4.0		3.2	3.2		16.0
18.0	3.8	3.3		3.5	3.8		3.7	3.7		2.4	3.8		3.4	3.9		2.5	3.9		3.6	3.8		3.2	3.2		18.0
20.0	3.4	3.0	2.6	2.0	3.5		3.7	3.4		1.1	3.2		2.0	3.6		1.1	3.2		2.1	3.7		3.2	3.2		20.0
22.0	3.1	2.7	2.4	1.0	2.5	2.6	2.7	3.2	2.5		1.9	2.6	1.0	2.5	2.6		1.9	2.6	1.1	2.6		2.3	3.2		22.0
24.0	2.2	2.5	2.2		1.6	2.4	1.9	2.8	2.4		0.9	2.5		1.5	2.5		1.0	2.5		1.6	2.5	1.5	2.5	2.5	24.0
26.0	1.6	2.2	2.1		0.8	2.2	1.2	2.0	2.3			1.7		0.8	2.2			1.8		0.9	2.2	0.8	1.7	2.4	26.0
28.0	1.1	1.6	2.0			1.4		1.4	2.2			1.0			1.4			1.0			1.5		1.1	2.0	28.0
30.0		1.1						0.9	1.6						0.8						0.9			1.4	30.0
32.0									1.1															0.9	32.0
34.0																									34.0
36.0																									36.0
38.0																									38.0
40.0																									40.0
44.0																									44.0
48.0																									48.0
52.0																									52.0
56.0																									56.0
60.0																									60.0
64.0																									64.0
68.0																									68.0
72.0																									72.0
1	0	0	0	46	46	46	0	0	0	92	92	92	46	46	46	92	92	92	46	46	46	0	0	0	1
2	0	0	0	46	46	46	0	0	0	46	46	46	46	46	46	46	46	46	46	46	46	0	0	0	2
3	0	0	0	46	46	46	0	0	0	46	46	46	46	46	46	46	46	46	46	46	46	46	46	46	3
4	0	0	0	0	0	0	46	46	46	0	0	0	46	46	46	46	46	46	46	46	46	92	92	92	4
5	0	0	0	0	0	0	92	92	92	0	0	0	0	0	0	0	0	0	46	46	46	92	92	92	5
ID	1	1	1	66	66	66	17	17	17	67	67	67	54	54	54	55	55	55	49	49	49	19	19	19	ID
[DEG]	0~81	44~85	59~85	65~81	66~85	71~85	60~81	61~85	65~85	69~81	71~85	73~85	67~81	69~85	70~85	71~81	73~85	75~85	69~81	71~85	73~85	65~81	69~85	71~85	[DEG]
	1	1	1	1	1	1	1	1	1	1	1	1	1	1	1	1	1	1	1	1	1	1	1	1	
	8.7t	8.7t	8.7t	8.7t	8.7t	8.7t	8.7t	8.7t	8.7t	8.7t	8.7t	8.7t	8.7t	8.7t	8.7t	8.7t	8.7t	8.7t	8.7t	8.7t	8.7t	8.7t	8.7t	8.7t	

m	43.0	43.0	43.0	43.0	43.0	43.0																			m
°	5	20	40	5	20	40																			°
3.0																									3.0
3.5																									3.5
4.0																									4.0
4.5																									4.5
5.0																									5.0
6.0																									6.0
7.0																									7.0
8.0																									8.0
9.0																									9.0
10.0																									10.0
11.0																									11.0
12.0																									12.0
14.0	3.8			2.9																					14.0
16.0	3.8			2.9																					16.0
18.0	2.3	3.8		2.9	2.9																				18.0
20.0	1.0	3.0		2.6	2.9																				20.0
22.0		1.7		1.6	2.9																				22.0
24.0		0.8		0.8	1.9																				24.0
26.0					1.2																				26.0
28.0																									28.0
30.0																									30.0
32.0																									32.0
34.0																									34.0
36.0																									36.0
38.0																									38.0
40.0																									40.0
44.0																									44.0
48.0																									48.0
52.0																									52.0
56.0																									56.0
60.0																									60.0
64.0																									64.0
68.0																									68.0
72.0																									72.0
1	92	92		0	0																				1
2	92	92		46	46																				2
3	46	46		92	92																				3
4	46	46		92	92																				4
5	46	46		92	92																				5
ID	42	42		21	21																				ID
[DEG]	74~81	76~85		71~81	75~85																				[DEG]
	1	1		1	1																				
	8.7t	8.7t		8.7t	8.7t																				

HLJ	1.0m + 31.0m	0.0 t	8.0m x 7.5m	360 °	JPN

m	12.8	12.8	12.8	25.8	25.8	25.8	25.8	25.8	25.8	30.1	30.1	30.1	30.1	30.1	30.1	34.4	34.4	34.4	34.4	34.4	34.4	34.4	34.4	34.4	m
°	5	20	40	5	20	40	5	20	40	5	20	40	5	20	40	5	20	40	5	20	40	5	20	40	°
3.0																									3.0
3.5																									3.5
4.0																									4.0
4.5																									4.5
5.0																									5.0
6.0																									6.0
7.0																									7.0
8.0																									8.0
9.0																									9.0
10.0	3.5																								10.0
11.0	3.5																								11.0
12.0	3.5			3.3			2.6																		12.0
14.0	3.5			3.3			2.6			3.1			2.9			2.9			2.8			2.3			14.0
16.0	3.5	3.0		3.3			2.6			3.1			2.9			2.9			2.8			2.3			16.0
18.0	3.2	2.7		3.3	3.0		2.6	2.6		3.1	3.0		2.9	2.9		2.9			2.8			2.3			18.0
20.0	2.9	2.5		2.8	2.7		2.6	2.6		2.0	2.8		2.7	2.8		1.9	2.8		2.8	2.8		2.3	2.3		20.0
22.0	2.6	2.2		1.7	2.5		2.6	2.5		0.9	2.6		1.6	2.6		0.9	2.6		1.7	2.6		2.3	2.3		22.0
24.0	2.3	2.0	1.7	0.9	2.3		2.3	2.3			1.9		0.8	2.4			1.9		0.9	2.4		1.8	2.3		24.0
26.0	2.1	1.9	1.6		1.6	1.7	1.6	2.1			1.1			1.6			1.1			1.6		1.2	2.2		26.0
28.0	1.6	1.7	1.5		1.0	1.6	1.1	1.9	1.6					0.9						0.9			1.5		28.0
30.0	1.1	1.6	1.4			1.5		1.4	1.5														1.0		30.0
32.0		1.3	1.3			1.1		1.0	1.4																32.0
34.0		0.9	1.2						1.2																34.0
36.0			1.0						0.9																36.0
38.0																									38.0
40.0																									40.0
44.0																									44.0
48.0																									48.0
52.0																									52.0
56.0																									56.0
60.0																									60.0
64.0																									64.0
68.0																									68.0
72.0																									72.0
1	0	0	0	46	46	46	0	0	0	92	92		46	46		92	92		46	46		0	0		1
2	0	0	0	46	46	46	0	0	0	46	46		46	46		46	46		46	46		0	0		2
3	0	0	0	46	46	46	0	0	0	46	46		46	46		46	46		46	46		46	46		3
4	0	0	0	0	0	0	46	46	46	0	0		46	46		46	46		46	46		92	92		4
5	0	0	0	0	0	0	92	92	92	0	0		0	0		0	0		46	46		92	92		5
ID	1	1	1	66	66	66	17	17	17	67	67		54	54		55	55		49	49		19	19		ID
[DEG]	0~81	51~85	56~85	67~81	71~85	75~85	64~81	67~85	70~85	71~81	75~85		69~81	73~85		73~81	76~85		71~81	74~85		70~81	73~85		[DEG]
	1	1	1	1	1	1	1	1	1	1	1		1	1		1	1		1	1		1	1		
	8.7t	8.7t	8.7t	8.7t	8.7t	8.7t	8.7t	8.7t	8.7t	8.7t	8.7t		8.7t	8.7t		8.7t	8.7t		8.7t	8.7t		8.7t	8.7t		

m	43.0	43.0	43.0	m
°	5	20	40	°
3.0				3.0
3.5				3.5
4.0				4.0
4.5				4.5
5.0				5.0
6.0				6.0
7.0				7.0
8.0				8.0
9.0				9.0
10.0				10.0
11.0				11.0
12.0				12.0
14.0				14.0
16.0	2.1			16.0
18.0	2.1			18.0
20.0	2.1			20.0
22.0	2.0	2.1		22.0
24.0	1.2	2.1		24.0
26.0		1.6		26.0
28.0		1.0		28.0
30.0				30.0
32.0				32.0
34.0				34.0
36.0				36.0
38.0				38.0
40.0				40.0
44.0				44.0
48.0				48.0
52.0				52.0
56.0				56.0
60.0				60.0
64.0				64.0
68.0				68.0
72.0				72.0
1	0	0		1
2	46	46		2
3	92	92		3
4	92	92		4
5	92	92		5
ID	21	21		ID
[DEG]	75~81	78~85		[DEG]
	1	1		
	8.7t	8.7t		

油圧チルトジブ

HLJ	1.0m + 2.8m	0.0 t	8.0m x 6.2m	360 °	JPN

m	12.8	12.8	12.8	25.8	25.8	25.8	25.8	25.8	25.8	30.1	30.1	30.1	30.1	30.1	30.1	34.4	34.4	34.4	34.4	34.4	34.4	43.0	43.0	43.0	m
°	5	20	40	5	20	40	5	20	40	5	20	40	5	20	40	5	20	40	5	20	40	5	20	40	°
3.0		31.6	25.3																						3.0
3.5	38.1	30.3	24.6		31.4			25.0																	3.5
4.0	36.1	29.1	23.9		30.6	23.4		24.2						31.2											4.0
4.5	34.3	28.0	23.3		29.8	23.1		23.3	21.5		30.2			30.4											4.5
5.0	32.7	27.0	22.8		29.0	22.7		22.4	20.6		29.5	22.8		29.8	22.9		24.9			16.9					5.0
6.0	29.9	25.3	21.8		27.7	22.0		20.5	19.0		28.3	22.2		28.5	22.3		24.9	23.0		16.9	16.9				6.0
7.0	27.7	23.8	20.9		26.5	21.3		18.9	17.7		27.1	21.6		27.4	21.7		24.9	22.4		16.9	16.9		12.1	12.1	7.0
8.0	21.6	22.1	20.2	20.6	21.3	20.8	18.6	17.5	16.5		20.7	21.1		21.9	21.2		22.8	21.9		16.9	16.7		12.1	12.1	8.0
9.0	16.9	17.3		16.0	16.6	17.2	17.3	16.3	15.5	15.3	16.0	16.7	16.6	17.2	17.8		18.0	18.6		16.2	15.9		12.1	12.1	9.0
10.0	13.6	13.9		12.8	13.2	13.8	15.6	15.3	14.6	12.1	12.7	13.2	13.3	13.8	14.3	14.1	14.6	15.1		15.3	14.9		12.1	12.1	10.0
11.0	11.1	11.4		10.3	10.7	11.2	13.0	13.3	13.6	9.7	10.2	10.7	10.9	11.3	11.7	11.6	12.0	12.4	13.4	13.7	14.0		12.1	12.1	11.0
12.0	9.2	9.4		8.0	8.8	9.2	11.0	11.3	11.5	6.2	7.5	8.7	9.0	9.3	9.7	9.7	10.0	10.4	11.4	11.6	11.9		11.3	11.6	12.0
14.0				2.1	2.7	3.3	7.6	8.0	8.4	0.9	1.6	2.3	3.2	3.8	4.4	4.8	5.4	6.0	8.3	8.7	8.9	7.6	8.1	8.6	14.0
16.0							4.0	4.3	4.5					0.9	1.3	1.7	2.1	2.5	4.6	4.9	5.2	4.0	4.3	4.7	16.0
18.0							2.0	2.2											2.5	2.8	3.0	2.0	2.3	2.5	18.0
20.0							0.8	0.9											1.2	1.4	1.6	0.8	1.0	1.2	20.0
22.0																									22.0
24.0																									24.0
26.0																									26.0
28.0																									28.0
30.0																									30.0
32.0																									32.0
34.0																									34.0
36.0																									36.0
38.0																									38.0
40.0																									40.0
44.0																									44.0
48.0																									48.0
52.0																									52.0
56.0																									56.0
60.0																									60.0
64.0																									64.0
68.0																									68.0
72.0																									72.0
1	0	0	0	46	46	46	0	0	0	92	92	92	46	46	46	46	46	46	0	0	0	0	0	0	1
2	0	0	0	46	46	46	0	0	0	46	46	46	46	46	46	46	46	46	0	0	0	46	46	46	2
3	0	0	0	46	46	46	0	0	0	46	46	46	46	46	46	46	46	46	46	46	46	92	92	92	3
4	0	0	0	0	0	0	46	46	46	0	0	0	46	46	46	46	46	46	92	92	92	92	92	92	4
5	0	0	0	0	0	0	92	92	92	0	0	0	0	0	0	46	46	46	92	92	92	92	92	92	5
ID	1	1	1	66	66	66	17	17	17	67	67	67	54	54	54	49	49	49	19	19	19	21	21	21	ID
[DEG]	0~76	34~85	58~85	58~76	60~85	61~85	42~76	44~85	56~85	63~76	65~85	65~85	63~76	60~85	61~85	63~76	65~85	65~85	56~76	57~85	58~85	64~76	65~85	65~85	[DEG]
	5	5	5	4	4	4	3	3	3	4	4	4	4	4	4	3	3	3	2	2	2	2	2	2	
	60t	60t	60t	60t	60t	60t	26t	26t	26t	60t	60t	60t	60t	60t	60t	26t	26t	26t	26t	26t	26t	26t	26t	26t	

HLJ	1.0m + 9.2m	0.0 t	8.0m x 6.2m	360 °	JPN

m	12.8	12.8	12.8	25.8	25.8	25.8	25.8	25.8	25.8	30.1	30.1	30.1	30.1	30.1	30.1	34.4	34.4	34.4	34.4	34.4	34.4	34.4	34.4	34.4	m
°	5	20	40	5	20	40	5	20	40	5	20	40	5	20	40	5	20	40	5	20	40	5	20	40	°
3.0																									3.0
3.5																									3.5
4.0	15.0																								4.0
4.5	15.0																								4.5
5.0	15.0	13.5																							5.0
6.0	15.0	12.4			14.4			14.1																	6.0
7.0	14.8	11.4	8.9	15.0	13.5		14.3	13.3			13.6			13.8			13.8			13.4					7.0
8.0	13.4	10.6	8.4	15.0	12.8		14.3	12.5		15.0	12.9		15.0	13.1			13.2			13.3			10.1		8.0
9.0	12.2	9.9	8.0	15.0	12.1	8.7	14.0	11.9	8.6	15.0	12.3	8.8	15.0	12.5	8.8	15.0	12.6		13.4	12.7			10.1		9.0
10.0	11.2	9.2	7.6	14.0	11.5	8.4	13.2	11.3	8.4	13.2	11.8	8.5	14.3	11.9	8.6	13.5	12.1	8.6	13.4	12.2	8.6	10.1	10.1		10.0
11.0	10.4	8.7	7.3	11.6	10.9	8.2	12.5	10.8	8.1	10.8	11.3	8.3	11.8	11.4	8.3	11.1	11.6	8.4	12.2	11.7	8.4	10.1	10.1	8.3	11.0
12.0	9.6	8.2	7.0	9.6	10.4	7.9	11.7	10.3	7.9	8.9	10.2	8.1	9.9	10.9	8.1	9.2	10.5	8.2	10.3	11.2	8.2	10.1	10.1	8.1	12.0
14.0	8.4	7.4	6.5	6.9	7.8	7.5	8.9	9.4	7.4	6.2	7.2	7.7	7.1	8.0	7.7	6.5	7.5	7.8	7.5	8.4	7.8	8.7	9.5	7.8	14.0
16.0	6.4	6.8		5.0	5.7	6.6	6.9	7.4	7.1	4.3	5.2	6.2	5.2	6.0	6.8	4.6	5.4	6.4	5.5	6.3	7.1	6.7	7.3	7.4	16.0
18.0	4.9			3.6	4.2	4.9	5.4	5.9	6.4	2.9	3.7	4.5	3.8	4.4	5.1	3.2	3.9	4.7	4.1	4.7	5.4	5.3	5.8	6.4	18.0
20.0				2.5	3.0	3.6	4.3	4.7	5.1	1.9	2.5	3.2	2.7	3.3	3.8	2.1	2.7	3.4	3.0	3.6	4.1	4.2	4.6	5.1	20.0
22.0				1.7	2.1	2.6	3.4	3.7	4.1		1.6	2.1	1.9	2.3	2.8		1.8	2.4	2.2	2.6	3.1	3.3	3.7	4.1	22.0
24.0					1.4		2.7	3.0						1.6	2.0			1.6	1.5	1.9	2.3	2.6	2.9	3.2	24.0
26.0							2.1	2.3												1.3	1.6	2.0	2.3	2.6	26.0
28.0							1.6	1.8														1.5	1.8		28.0
30.0							1.2															1.1	1.3		30.0
32.0																									32.0
34.0																									34.0
36.0																									36.0
38.0																									38.0
40.0																									40.0
44.0																									44.0
48.0																									48.0
52.0																									52.0
56.0																									56.0
60.0																									60.0
64.0																									64.0
68.0																									68.0
72.0																									72.0
1	0	0	0	46	46	46	0	0	0	92	92	92	46	46	46	92	92	92	46	46	46	0	0	0	1
2	0	0	0	46	46	46	0	0	0	46	46	46	46	46	46	46	46	46	46	46	46	0	0	0	2
3	0	0	0	46	46	46	0	0	0	46	46	46	46	46	46	46	46	46	46	46	46	46	46	46	3
4	0	0	0	0	0	0	46	46	46	0	0	0	46	46	46	46	46	46	46	46	46	92	92	92	4
5	0	0	0	0	0	0	92	92	92	0	0	0	0	0	0	0	0	0	46	46	46	92	92	92	5
ID	1	1	1	66	66	66	17	17	17	67	67	67	54	54	54	55	55	55	49	49	49	19	19	19	ID
[DEG]	0~79	44~85	57~85	49~79	48~85	56~85	27~79	37~85	56~85	58~79	57~85	61~85	54~79	54~85	57~85	61~79	61~85	61~85	56~79	56~85	58~85	45~79	48~85	58~85	[DEG]
	2	2	2	2	2	2	2	2	2	2	2	2	2	2	2	2	2	2	2	2	2	2	2	2	
	26t	26t	26t	26t	26t	26t	26t	26t	26t	26t	26t	26t	26t	26t	26t	26t	26t	26t	26t	26t	26t	26t	26t	26t	

m	43.0	43.0	43.0	43.0	43.0	43.0	47.4	47.4	47.4	47.4	47.4	47.4	51.7	51.7	51.7	56.0	56.0	56.0	m
°	5	20	40	5	20	40	5	20	40	5	20	40	5	20	40	5	20	40	°
3.0																			3.0
3.5																			3.5
4.0																			4.0
4.5																			4.5
5.0																			5.0
6.0																			6.0
7.0																			7.0
8.0																			8.0
9.0		10.6			7.2														9.0
10.0		10.6			7.2			8.4			7.5								10.0
11.0		10.6			7.2			8.4			7.5			6.4			6.4		11.0
12.0	9.4	10.6	8.3	7.2	7.2	7.2		8.4			7.5			6.4			6.4		12.0
14.0	6.7	7.7	7.9	7.2	7.2	7.2	6.9	8.0	8.0	7.5	7.5	7.5	6.4	6.4	6.4		6.4		14.0
16.0	4.8	5.6	6.6	6.5	7.2	7.2	5.0	5.9	6.9	5.6	6.4	7.3	5.9	6.4	6.4	5.4	6.2	6.4	16.0
18.0	3.4	4.1	4.9	5.0	5.6	6.3	3.6	4.3	5.2	4.2	4.9	5.6	4.4	5.1	5.8	4.0	4.7	5.5	18.0
20.0	2.3	2.9	3.6	3.9	4.4	5.0	2.5	3.2	3.9	3.1	3.7	4.3	3.3	3.9	4.5	2.9	3.5	4.2	20.0
22.0		2.0	2.6	3.0	3.5	3.9		2.2	2.9	2.2	2.7	3.3	2.4	2.9	3.5	2.0	2.6	3.2	22.0
24.0			1.8	2.3	2.7	3.1			2.0		2.0	2.5	1.7	2.2	2.7			2.4	24.0
26.0				1.7	2.1	2.4						1.8			2.0				26.0
28.0					1.6	1.9													28.0
30.0						1.4													30.0
32.0																			32.0
34.0																			34.0
36.0																			36.0
38.0																			38.0
40.0																			40.0
44.0																			44.0
48.0																			48.0
52.0																			52.0
56.0																			56.0
60.0																			60.0
64.0																			64.0
68.0																			68.0
72.0																			72.0
1	92	92	92	0	0	0	92	92	92	46	46	46	46	46	46	92	92	92	1
2	92	92	92	46	46	46	92	92	92	92	92	92	92	92	92	92	92	92	2
3	46	46	46	92	92	92	92	92	92	92	92	92	92	92	92	92	92	92	3
4	46	46	46	92	92	92	46	46	46	92	92	92	92	92	92	92	92	92	4
5	46	46	46	92	92	92	46	46	46	46	46	46	92	92	92	92	92	92	5
ID	42	42	42	21	21	21	38	38	38	31	31	31	23	23	23	24	24	24	ID
[DEG]	67~79	67~85	67~85	60~79	60~85	59~85	70~79	70~85	70~85	67~79	67~85	67~85	67~79	70~85	70~85	71~79	73~85	74~85	[DEG]
	2	2	2	1	1	1	1	1	1	1	1	1	1	1	1	1	1	1	
	26t	26t	26t	8.7t	8.7t	8.7t	8.7t	8.7t	8.7t	8.7t	8.7t	8.7t	8.7t	8.7t	8.7t	8.7t	8.7t	8.7t	

油圧チルトジブ

HLJ	1.0m + 17.0m	0.0 t	8.0m x 6.2m	360 °	JPN

m	12.8	12.8	12.8	25.8	25.8	25.8	25.8	25.8	25.8	30.1	30.1	30.1	30.1	30.1	30.1	34.4	34.4	34.4	34.4	34.4	34.4	34.4	34.4	34.4	m
°	5	20	40	5	20	40	5	20	40	5	20	40	5	20	40	5	20	40	5	20	40	5	20	40	°
3.0																									3.0
3.5																									3.5
4.0																									4.0
4.5																									4.5
5.0																									5.0
6.0	7.3																								6.0
7.0	6.8																								7.0
8.0	6.4	5.4		7.0			5.6																		8.0
9.0	6.0	5.1		6.7			5.6			6.7			6.5												9.0
10.0	5.7	4.8		6.4	5.0		5.6	4.8		6.5			6.3			6.3			5.9			4.6			10.0
11.0	5.3	4.6		6.1	4.8		5.6	4.6		6.2	4.9		6.1	4.8		6.1	4.8		5.9	4.7		4.6			11.0
12.0	5.1	4.4		5.8	4.7		5.5	4.5		6.0	4.7		5.9	4.6		5.9	4.7		5.7	4.6		4.6	4.4		12.0
14.0	4.6	4.0	3.5	5.4	4.4		5.1	4.2		5.5	4.4		5.4	4.4		5.5	4.4		5.4	4.3		4.6	4.2		14.0
16.0	4.2	3.7	3.3	4.2	4.1	3.4	4.8	3.9	3.3	2.9	4.2	3.4	4.3	4.1	3.4	3.2	4.2	3.4	4.7	4.1		4.6	4.0		16.0
18.0	3.8	3.4	3.1	2.1	3.9	3.3	4.4	3.7	3.2	1.1	3.2	3.3	2.3	3.9	3.3	1.3	3.3	3.3	2.6	3.9	3.2	4.2	3.8	3.2	18.0
20.0	3.2	3.2	3.0	0.9	2.3	3.1	3.1	3.5	3.1		1.6	3.2	1.0	2.4	3.2		1.7	3.2	1.2	2.7	3.1	2.7	3.6	3.1	20.0
22.0	2.1	2.8	2.9		1.2	2.6	2.1	2.9	3.0			2.1		1.3	2.7			2.2		1.5	2.9	1.7	2.6	3.0	22.0
24.0	1.4	1.9				1.5	1.3	2.0	2.8			1.0			1.6			1.1			1.8	1.0	1.8	2.7	24.0
26.0	0.8							1.3	2.0						0.8						1.0		1.1	1.8	26.0
28.0									1.3															1.2	28.0
30.0																									30.0
32.0																									32.0
34.0																									34.0
36.0																									36.0
38.0																									38.0
40.0																									40.0
44.0																									44.0
48.0																									48.0
52.0																									52.0
56.0																									56.0
60.0																									60.0
64.0																									64.0
68.0																									68.0
72.0																									72.0
1	0	0	0	46	46	46	0	0	0	92	92	92	46	46	46	92	92	92	46	46	46	0	0	0	1
2	0	0	0	46	46	46	0	0	0	46	46	46	46	46	46	46	46	46	46	46	46	0	0	0	2
3	0	0	0	46	46	46	0	0	0	46	46	46	46	46	46	46	46	46	46	46	46	46	46	46	3
4	0	0	0	0	0	0	46	46	46	0	0	0	46	46	46	46	46	46	46	46	46	92	92	92	4
5	0	0	0	0	0	0	92	92	92	0	0	0	0	0	0	0	0	0	46	46	46	92	92	92	5
ID	1	1	1	66	66	66	17	17	17	67	67	67	54	54	54	55	55	55	49	49	49	19	19	19	ID
[DEG]	0~81	41~85	56~85	61~81	64~85	67~85	56~81	58~85	59~85	67~81	70~85	69~85	64~81	67~85	66~85	69~81	72~85	72~85	67~81	69~85	69~85	63~81	64~85	67~85	[DEG]
	1	1	1	1	1	1	1	1	1	1	1	1	1	1	1	1	1	1	1	1	1	1	1	1	
	8.7t	8.7t	8.7t	8.7t	8.7t	8.7t	8.7t	8.7t	8.7t	8.7t	8.7t	8.7t	8.7t	8.7t	8.7t	8.7t	8.7t	8.7t	8.7t	8.7t	8.7t	8.7t	8.7t	8.7t	

m	43.0	43.0	43.0	43.0	43.0	43.0	47.4	47.4	47.4	51.7	51.7	51.7													m
°	5	20	40	5	20	40	5	20	40	5	20	40													°
3.0																									3.0
3.5																									3.5
4.0																									4.0
4.5																									4.5
5.0																									5.0
6.0																									6.0
7.0																									7.0
8.0																									8.0
9.0																									9.0
10.0																									10.0
11.0																									11.0
12.0	5.5			4.1																					12.0
14.0	5.4	4.3		4.1	4.1		4.3	4.2		3.9															14.0
16.0	3.2	4.1		4.1	3.9		4.1	4.0		3.9	3.9														16.0
18.0	1.3	3.3	3.2	3.4	3.8		2.1	3.8		2.3	3.7														18.0
20.0		1.7	3.1	2.0	3.3	3.1	0.8	2.3	3.1	1.0	2.4	3.0													20.0
22.0			2.2	1.1	2.1	3.0		1.2	2.6		1.3	2.7													22.0
24.0			1.2		1.2	2.3			1.6			1.7													24.0
26.0						1.5			0.8			0.9													26.0
28.0						0.8																			28.0
30.0																									30.0
32.0																									32.0
34.0																									34.0
36.0																									36.0
38.0																									38.0
40.0																									40.0
44.0																									44.0
48.0																									48.0
52.0																									52.0
56.0																									56.0
60.0																									60.0
64.0																									64.0
68.0																									68.0
72.0																									72.0
1	92	92	92	0	0	0	46	46	46	46	46	46													1
2	92	92	92	46	46	46	92	92	92	92	92	92													2
3	46	46	46	92	92	92	92	92	92	92	92	92													3
4	46	46	46	92	92	92	92	92	92	92	92	92													4
5	46	46	46	92	92	92	46	46	46	92	92	92													5
ID	42	42	42	21	21	21	31	31	31	23	23	23													ID
[DEG]	73~81	75~85	75~85	69~81	71~85	71~85	73~81	75~85	75~85	74~81	76~85	76~85													[DEG]
	1	1	1	1	1	1	1	1	1	1	1	1													
	8.7t	8.7t	8.7t	8.7t	8.7t	8.7t	8.7t	8.7t	8.7t	8.7t	8.7t	8.7t													

HLJ	1.0m + 24.0m	0.0 t	8.0m x 6.2m	360 °	JPN

m	12.8	12.8	12.8	25.8	25.8	25.8	25.8	25.8	25.8	30.1	30.1	30.1	30.1	30.1	30.1	34.4	34.4	34.4	34.4	34.4	34.4	34.4	34.4	34.4	m
°	5	20	40	5	20	40	5	20	40	5	20	40	5	20	40	5	20	40	5	20	40	5	20	40	°
3.0																									3.0
3.5																									3.5
4.0																									4.0
4.5																									4.5
5.0																									5.0
6.0																									6.0
7.0																									7.0
8.0	5.1																								8.0
9.0	5.1																								9.0
10.0	5.1			4.9			3.7																		10.0
11.0	5.1			4.9			3.7			4.6			4.3												11.0
12.0	5.1	4.5		4.9			3.7			4.6			4.3			4.2			4.0			3.2			12.0
14.0	4.8	4.0		4.9	4.4		3.7	3.7		4.6	4.4		4.3	4.3		4.2			4.0			3.2			14.0
16.0	4.3	3.6		4.9	4.1		3.7	3.7		4.6	4.1		4.3	4.1		4.2	4.1		4.0	4.0		3.2	3.2		16.0
18.0	3.8	3.3		3.5	3.8		3.7	3.7		2.4	3.8		3.4	3.9		2.5	3.9		3.6	3.8		3.2	3.2		18.0
20.0	3.4	3.0	2.6	2.0	3.5		3.7	3.4		1.1	3.2		2.0	3.6		1.1	3.2		2.1	3.7		3.2	3.2		20.0
22.0	3.1	2.7	2.4	1.0	2.5	2.6	2.7	3.2	2.5		1.9	2.6	1.0	2.5	2.6		1.9	2.6	1.1	2.6		2.3	3.2		22.0
24.0	2.2	2.5	2.2		1.6	2.4	1.9	2.8	2.4		0.9	2.5		1.5	2.5		1.0	2.5		1.6	2.5	1.5	2.5	2.5	24.0
26.0	1.6	2.2	2.1		0.8	2.2	1.2	2.0	2.3			1.7		0.8	2.2			1.8		0.9	2.2	0.8	1.7	2.4	26.0
28.0	1.1	1.6	2.0			1.4		1.4	2.2			1.0			1.4			1.0			1.5		1.1	2.0	28.0
30.0		1.1						0.9	1.6						0.8						0.9			1.4	30.0
32.0									1.1															0.9	32.0
34.0																									34.0
36.0																									36.0
38.0																									38.0
40.0																									40.0
44.0																									44.0
48.0																									48.0
52.0																									52.0
56.0																									56.0
60.0																									60.0
64.0																									64.0
68.0																									68.0
72.0																									72.0
1	0	0	0	46	46	46	0	0	0	92	92	92	46	46	46	92	92	92	46	46	46	0	0	0	1
2	0	0	0	46	46	46	0	0	0	46	46	46	46	46	46	46	46	46	46	46	46	0	0	0	2
3	0	0	0	46	46	46	0	0	0	46	46	46	46	46	46	46	46	46	46	46	46	46	46	46	3
4	0	0	0	0	0	0	46	46	46	0	0	0	46	46	46	46	46	46	46	46	46	92	92	92	4
5	0	0	0	0	0	0	92	92	92	0	0	0	0	0	0	0	0	0	46	46	46	92	92	92	5
ID	1	1	1	66	66	66	17	17	17	67	67	67	54	54	54	55	55	55	49	49	49	19	19	19	ID
[DEG]	0~81	44~85	59~85	65~81	66~85	71~85	60~81	61~85	65~85	69~81	71~85	73~85	67~81	69~85	70~85	71~81	73~85	75~85	69~81	71~85	73~85	65~81	69~85	71~85	[DEG]
	1	1	1	1	1	1	1	1	1	1	1	1	1	1	1	1	1	1	1	1	1	1	1	1	
	8.7t	8.7t	8.7t	8.7t	8.7t	8.7t	8.7t	8.7t	8.7t	8.7t	8.7t	8.7t	8.7t	8.7t	8.7t	8.7t	8.7t	8.7t	8.7t	8.7t	8.7t	8.7t	8.7t	8.7t	

m	43.0	43.0	43.0	43.0	43.0	43.0																			m
°	5	20	40	5	20	40																			°
3.0																									3.0
3.5																									3.5
4.0																									4.0
4.5																									4.5
5.0																									5.0
6.0																									6.0
7.0																									7.0
8.0																									8.0
9.0																									9.0
10.0																									10.0
11.0																									11.0
12.0																									12.0
14.0	3.8			2.9																					14.0
16.0	3.8			2.9																					16.0
18.0	2.3	3.8		2.9	2.9																				18.0
20.0	1.0	3.0		2.6	2.9																				20.0
22.0		1.7		1.6	2.9																				22.0
24.0		0.8		0.8	1.9																				24.0
26.0					1.2																				26.0
28.0																									28.0
30.0																									30.0
32.0																									32.0
34.0																									34.0
36.0																									36.0
38.0																									38.0
40.0																									40.0
44.0																									44.0
48.0																									48.0
52.0																									52.0
56.0																									56.0
60.0																									60.0
64.0																									64.0
68.0																									68.0
72.0																									72.0
1	92	92		0	0																				1
2	92	92		46	46																				2
3	46	46		92	92																				3
4	46	46		92	92																				4
5	46	46		92	92																				5
ID	42	42		21	21																				ID
[DEG]	74~81	76~85		71~81	75~85																				[DEG]
	1	1		1	1																				
	8.7t	8.7t		8.7t	8.7t																				

油圧チルトジブ

HLJ	1.0m + 31.0m	0.0 t	8.0m x 6.2m	360 °	JPN

m	12.8	12.8	12.8	25.8	25.8	25.8	25.8	25.8	25.8	30.1	30.1	30.1	30.1	30.1	30.1	34.4	34.4	34.4	34.4	34.4	34.4	34.4	34.4	34.4	m
°	5	20	40	5	20	40	5	20	40	5	20	40	5	20	40	5	20	40	5	20	40	5	20	40	°
3.0																									3.0
3.5																									3.5
4.0																									4.0
4.5																									4.5
5.0																									5.0
6.0																									6.0
7.0																									7.0
8.0																									8.0
9.0																									9.0
10.0	3.5																								10.0
11.0	3.5																								11.0
12.0	3.5			3.3			2.6																		12.0
14.0	3.5			3.3			2.6			3.1			2.9			2.9			2.8			2.3			14.0
16.0	3.5	3.0		3.3			2.6			3.1			2.9			2.9			2.8			2.3			16.0
18.0	3.2	2.7		3.3	3.0		2.6	2.6		3.1	3.0		2.9	2.9		2.9			2.8			2.3			18.0
20.0	2.9	2.5		2.8	2.7		2.6	2.6		2.0	2.8		2.7	2.8		1.9	2.8		2.8	2.8		2.3	2.3		20.0
22.0	2.6	2.2		1.7	2.5		2.6	2.5		0.9	2.6		1.6	2.6		0.9	2.6		1.7	2.6		2.3	2.3		22.0
24.0	2.3	2.0	1.7	0.9	2.3		2.3	2.3			1.9		0.8	2.4			1.9		0.9	2.4		1.8	2.3		24.0
26.0	2.1	1.9	1.6		1.6	1.7	1.6	2.1			1.1			1.6			1.1			1.6		1.2	2.2		26.0
28.0	1.6	1.7	1.5		1.0	1.6	1.1	1.9	1.6					0.9						0.9			1.5		28.0
30.0	1.1	1.6	1.4			1.5		1.4	1.5														1.0		30.0
32.0		1.3	1.3			1.1		1.0	1.4																32.0
34.0		0.9	1.2						1.2																34.0
36.0			1.0						0.9																36.0
38.0																									38.0
40.0																									40.0
44.0																									44.0
48.0																									48.0
52.0																									52.0
56.0																									56.0
60.0																									60.0
64.0																									64.0
68.0																									68.0
72.0																									72.0
1	0	0	0	46	46	46	0	0	0	92	92		46	46		92	92		46	46		0	0		1
2	0	0	0	46	46	46	0	0	0	46	46		46	46		46	46		46	46		0	0		2
3	0	0	0	46	46	46	0	0	0	46	46		46	46		46	46		46	46		46	46		3
4	0	0	0	0	0	0	46	46	46	0	0		46	46		46	46		46	46		92	92		4
5	0	0	0	0	0	0	92	92	92	0	0		0	0		0	0		46	46		92	92		5
ID	1	1	1	66	66	66	17	17	17	67	67		54	54		55	55		49	49		19	19		ID
[DEG]	0~81	51~85	56~85	67~81	71~85	75~85	64~81	67~85	70~85	71~81	75~85		69~81	73~85		73~81	76~85		71~81	74~85		70~81	73~85		[DEG]
	1	1	1	1	1	1	1	1	1	1	1		1	1		1	1		1	1		1	1		
	8.7t	8.7t	8.7t	8.7t	8.7t	8.7t	8.7t	8.7t	8.7t	8.7t	8.7t		8.7t	8.7t		8.7t	8.7t		8.7t	8.7t		8.7t	8.7t		

m	43.0	43.0	43.0																						m
°	5	20	40																						°
3.0																									3.0
3.5																									3.5
4.0																									4.0
4.5																									4.5
5.0																									5.0
6.0																									6.0
7.0																									7.0
8.0																									8.0
9.0																									9.0
10.0																									10.0
11.0																									11.0
12.0																									12.0
14.0																									14.0
16.0	2.1																								16.0
18.0	2.1																								18.0
20.0	2.1																								20.0
22.0	2.0	2.1																							22.0
24.0	1.2	2.1																							24.0
26.0		1.6																							26.0
28.0		1.0																							28.0
30.0																									30.0
32.0																									32.0
34.0																									34.0
36.0																									36.0
38.0																									38.0
40.0																									40.0
44.0																									44.0
48.0																									48.0
52.0																									52.0
56.0																									56.0
60.0																									60.0
64.0																									64.0
68.0																									68.0
72.0																									72.0
1	0	0																							1
2	46	46																							2
3	92	92																							3
4	92	92																							4
5	92	92																							5
ID	21	21																							ID
[DEG]	75~81	78~85																							[DEG]
	1	1																							
	8.7t	8.7t																							

MEMO

TADANO

●製品は、改良などのためこのスペックと相違する場合もありますので、ご了承ください。

ATF-140N-1-90101（ATF-140N-5.1）ブーム＋フルオートラフィングジブ(FLJ)＋油圧チルトジブ(HLJ)仕様
ATF-140N-1-90102（ATF-140N-5.1）ブーム＋フルオートラフィングジブ(FLJ)仕様
ATF-140N-1-90103（ATF-140N-5.1）ブーム＋油圧チルトジブ(HLJ)仕様

1905-01-0.98